AIR-SIGNAL SYSTEM

Serial 679 Edition 2

TRAIN AIR-SIGNALING SYSTEM

GENERAL ARRANGEMENT OF APPARATUS

1. The general arrangement of the train **air-signaling apparatus** on an engine, tender, and passenger car is shown in Figs. 1 and 2. This system has gradually taken the place of the old bell-cord-and-gong method of signaling on passenger trains, on account of the ease and certainty with which signals can be transmitted to the engineer from any part of the train.

The engine, tender, and each of the cars are piped with a $\frac{3}{4}$-inch pipe, which is connected between cars by means of hose, so that when all the hose is coupled, the signal-pipe line extends throughout the entire train.

A *car discharge valve*, Fig. 1, is provided on each car. This is usually located outside the car above the door, as shown in the figure, and is piped to the train signal pipe. Sometimes, however, it is placed inside the car above the door, to guard against the valve being clogged in winter. The former position is preferable, however, as the chances of clogging are small, and the annoyance caused by the sharp sound of discharging air every time the valve is opened to make signals is avoided.

A signal cord is attached to the lever of the discharge valve, and one end extends across the platform and is fastened in a suitable manner to the hood, while the other

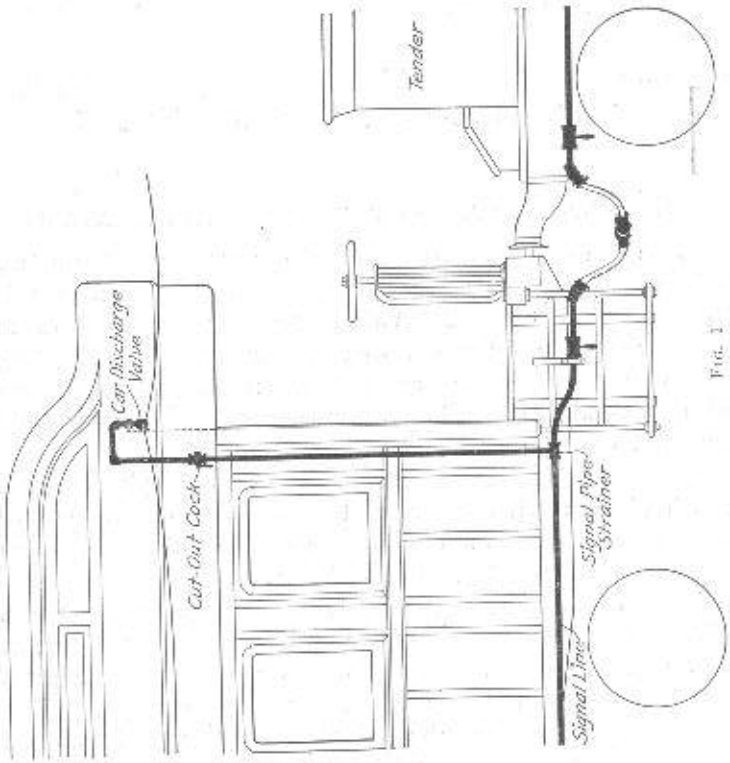
Car Discharge Valve
Cut-Out Cock
Tender
Signal Pipe Strainer
Signal Line

FIG. 1

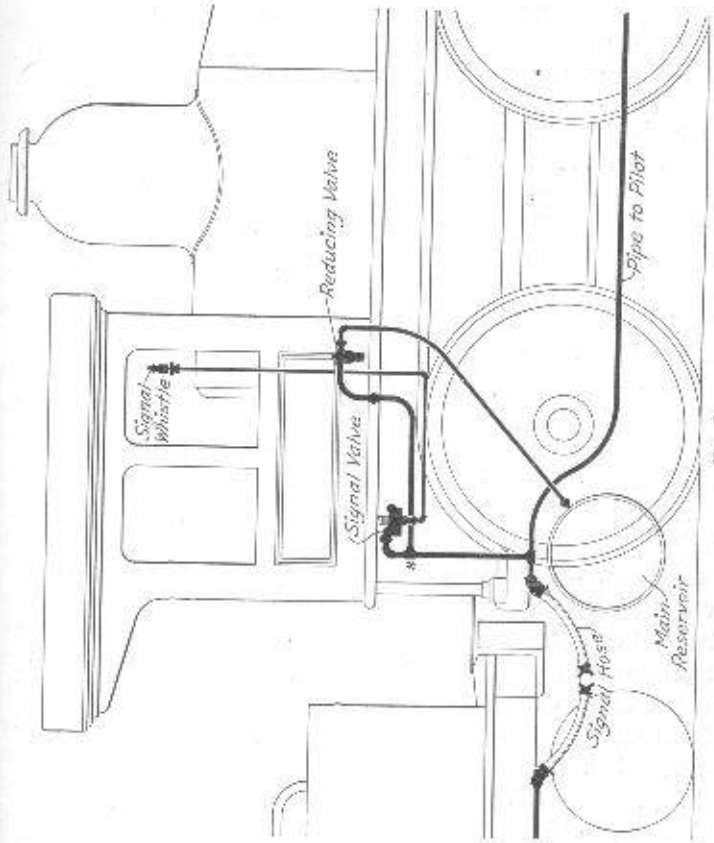
Reducing Valve
Signal Whistle
Signal Valve
Pipe to Pilot
Main Reservoir
Signal Hose

FIG. 2

end extends through the car and is fastened to the hood on the other end of the car. This cord enables the discharge valve to be operated from any part of the car.

The air-signal apparatus on the engine, Fig. 2, consists of the *signal valve*, *signal whistle*, and *pressure-reducing valve*. A ⅜-inch pipe leads from the main reservoir to an air strainer, then to the reducing valve, and thence leads to, and connects with, the T-fitting *s* in the signal pipe. Air from the main reservoir can thus pass through the pressure-reducing valve and thence into the signal pipe and signal valve, but the pressure of the air will be reduced to the pressure the reducing valve is set for. A pressure of 40 pounds is maintained in the signal system, and the duty of the reducing valve is to diminish the pressure from 90 pounds (main-reservoir pressure) to the required pressure for use in the signal system.

The **signal whistle**, Fig. 3 (a small whistle located in the cab, as close to the engineer as practicable), is piped to the signal valve, and it is the operation of the latter that causes the whistle to blow.

When the conductor wishes to transmit a signal to the engineer, he gives the signal cord in one of the cars a pull. This opens the discharge valve on that car and allows some of the air in the main signal pipe to escape to the atmosphere, thus reducing the signal-pipe pressure. The reduction in pressure operates the signal valve on the engine, which consequently discharges a small quantity of air through the signal whistle in the cab, thus causing it to sound a short blast. Each time the cord is pulled, the signal whistle gives a blast.

The bowl *1* forms the base of the whistle and connects with the whistle pipe at *X*. The passage *a'* and port *a* form a passage from the whistle pipe into chamber *A*. The disk *2* deflects the escaping air and makes it strike the edge of the bell *3* of the whistle. The tone of the whistle depends on the depth of chamber *B*. The check-nut *4* and cap nut *5* act as locknuts to lock the bell of the whistle in position after it has been adjusted.

An imperfect adjustment of the whistle bell, or its bowl being filled with dirt, will either cause the whistle to work badly or prevent its working at all. No set rule can be given for the adjustment of the whistle, but it must be so adjusted as to give the best sound. To adjust the whistle slack off nut *5* and turn the whistle bell up or down until the

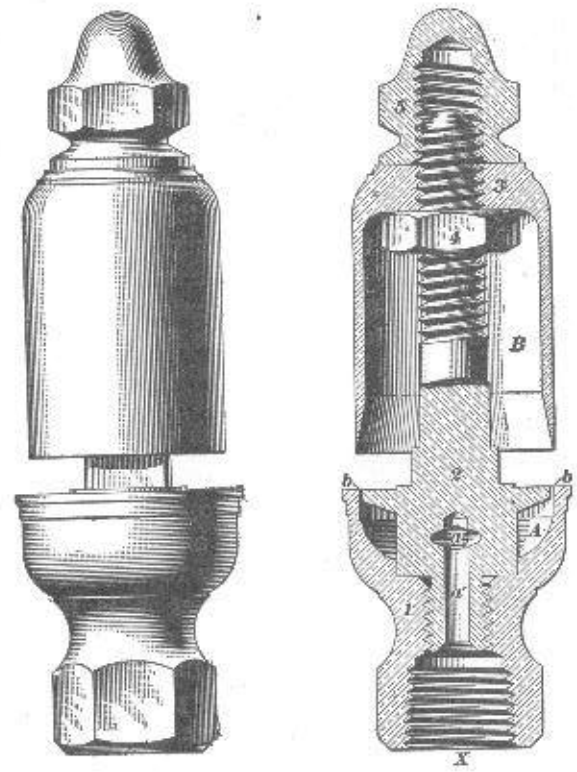

Fig. 3

desired result is obtained. A jam nut *4* on the whistle stem is an aid to the locknut in holding the whistle bell in any desired position. Care should be taken not to locate the whistle near one of the cab windows where a current of air will be liable to blow across it, as a strong current of air blowing across the whistle will render it inoperative.

DESCRIPTION OF APPARATUS

REDUCING VALVE (OLD STYLE)

2. Although this style of **reducing valve,** Fig. 4, has been superseded to a great extent by the improved valve, there are still a sufficient number in use to warrant a description of them being given here.

The main-reservoir connection is made at *X*, while a pipe leads from *Y* to the signal pipe. *4* is the supply valve that regulates the admission of air to the signal system; it is operated by the stem of the reducing-valve piston *8* and by the supply-valve spring *10*. *7* is the rubber diaphragm; *6*, the diaphragm ring; and *9*, the regulating spring. In this style of valve, the spring *9* was made strong enough to just resist a pressure of 25 pounds per square inch in chamber *B*. It is now the practice, however, to use a spring that requires a pressure of 40 pounds per square inch to compress it. The outlets *e*, *e* in the cap *3* prevent air (due to leakage) from accumulating back of the piston and piston stem and rendering the valve inoperative.

3. Operation of Valve.—The operation of this valve is as follows: The spring *9*, acting on the piston *8*, causes the stem of the piston to hold supply valve *4* from its seat, so that main-reservoir air entering at *X* is free to pass through the passages *2*, *2*, past valve *4* and into chamber *B*, and thence through the outlet *Y* to the signal pipe. This increases the pressure in the signal pipe and chamber *B* until it reaches 40 pounds per square inch, when the diaphragm *7* and piston *8* are forced upwards against the action of the spring *9*. The supply-valve spring *10* then forces the supply valve to its seat, and prevents the further passage of air from the main reservoir to the signal pipe. As long as the pressure in chamber *B* remains at 40 pounds, spring *9* will be compressed and the supply valve will remain closed. Any reduction of pressure in chamber *B*, however, will cause the regulating spring to force the diaphragm *7* and piston *8*

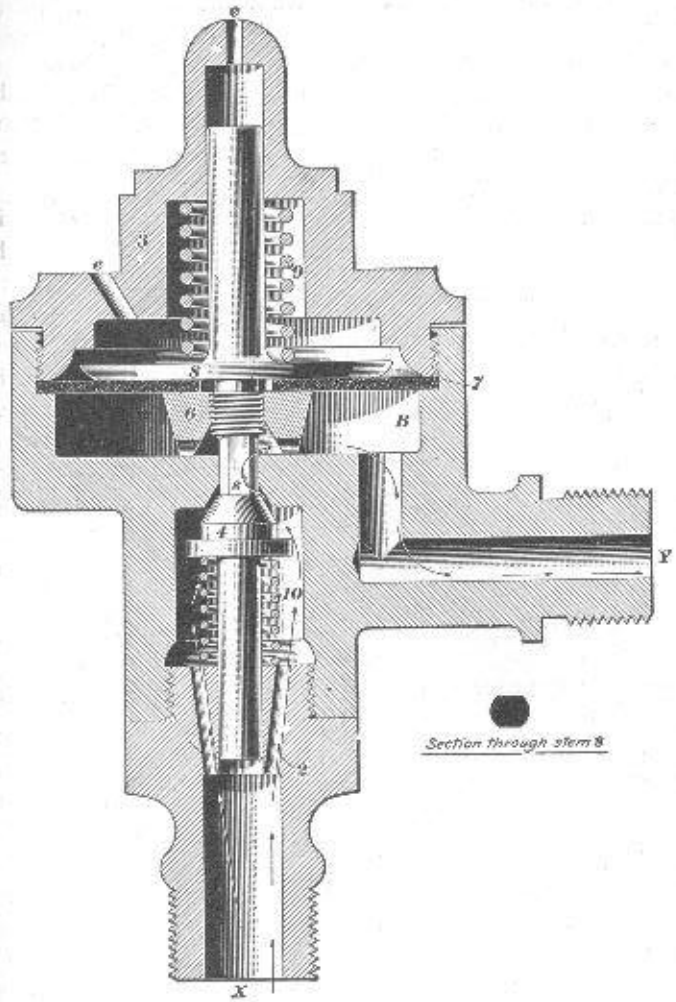

FIG. 4

downwards, thus forcing the supply valve from its seat and allowing sufficient air to pass to the signal pipe to raise its pressure again to 40 pounds, when the supply valve will close. The old-style valve has no regulating nut by means of which the tension of the regulating spring can be adjusted to alter signal-pipe pressure. If it is necessary to increase the signal-pipe pressure, the regulating spring *9* will have to be replaced by one that is stiffer. The weak part of this valve was the diaphragm *7*, which deteriorated rapidly, allowing air to leak through it to the atmosphere.

REDUCING VALVE (IMPROVED)

4. The improved reducing valve is shown in Fig. 5; *16* is a choke plug that restricts the flow of air through the valve so that the reducing valve cannot supply air to the signal pipe faster than the car discharge valve can reduce the pressure; *2* is a plug cock that, in the position here shown, is allowing air to enter the reducing valve, but, when turned at right angles to its present position, cuts the valve out of service; *3* is the lower cap; *4*, the supply valve; *5*, the supply-valve cap nut; *6*, the supply-valve spring; *7*, the reducing-valve piston; *8*, a rubber diaphragm consisting of two pieces of rubber; *9*, the regulating spring; *10*, the diaphragm ring; *11*, the piston packing ring (which, together with the diaphragm, serves to prevent leakage of air past piston *7*); *14*, the regulating nut by means of which the tension of the spring *9* is adjusted; and *15*, the check-nut. The passage *e* is to allow any air leaking past the piston *7* to escape to the atmosphere.

5. Operation of Valve.—The tension of the regulating spring *9* is adjusted to just withstand a pressure of 40 pounds per square inch in chamber *B*. When the pressure is less than this amount, the spring *9* forces piston *7* upwards and the piston stem unseats the supply valve *4*. Main-reservoir air (entering at *X*) is then free to pass through the plug cock *2*, supply valve *4*, and thence out through *Y* to the signal pipe. As soon as the pressure in the signal pipe and

chamber *B* reaches 40 pounds, piston *7* is forced downwards and the spring *6* forces the supply valve to its seat, closing communication between the main reservoir and the signal pipe. Any reduction in signal-pipe pressure will allow the

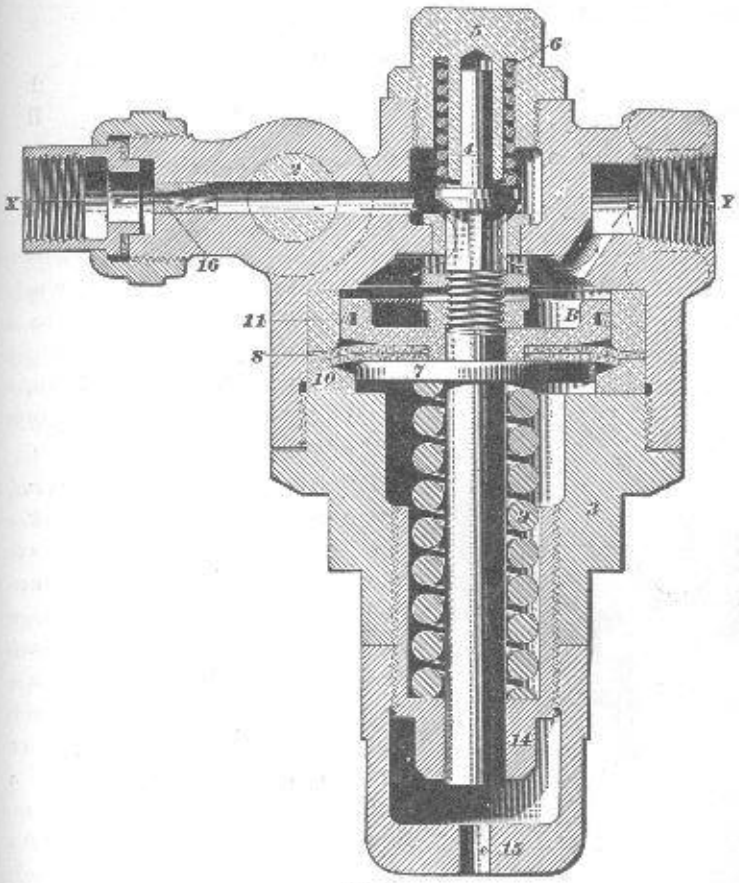

Fig. 5

spring *9* to force piston *7* upwards, thus opening the supply valve again. The valve then remains open until the signal-pipe pressure is again raised to 40 pounds, when it closes.

The reducing valve should be placed in the cab, in some moderately warm place, if possible, to prevent its freezing in cold weather.

With the improved valve, the signal-pipe pressure may be increased by screwing up the regulating nut *14*, or decreased by unscrewing this nut.

CAR DISCHARGE VALVE

6. A sectional view of the **car discharge valve** is shown in Fig. 6, in which *3* is the discharge valve and *4* the discharge-valve spring that holds this valve up against its seat. *5* is the lever, or handle, to which the signal cord is attached, while *6*, *6* are stop-pins. There is a union connection at *a* to which the branch pipe from the signal pipe is connected, while the exhaust port *b* leads to the atmosphere.

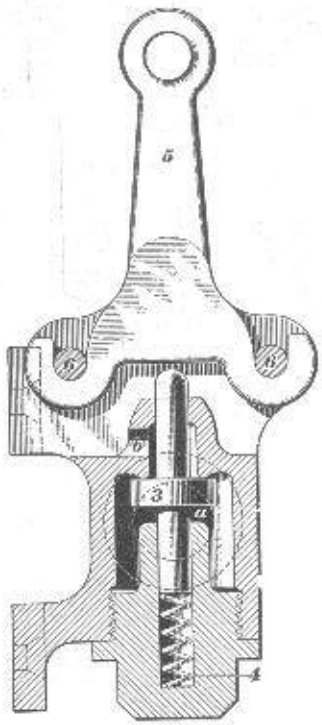

Fig. 6

7. Operation of Valve. When the signal cord on either side of the discharge valve is pulled, the lever *5* is caused to strike the stem of the discharge valve *3* and force the valve from its seat. Air from the signal pipe then passes through the branch pipes and out to the atmosphere through the union connection *a* and the port *b*, causing a reduction in signal-pipe pressure. As soon as the signal cord is released, the spring *4* forces the discharge valve to its seat again and stops the discharge of air from the signal pipe.

Referring to Fig. 1, it will be seen that the branch pipe to the discharge valve is supplied with a strainer (where it

connects with the main signal pipe) and a cut-out cock, the former to prevent dirt from reaching the discharge valve, and the latter to enable the discharge valve to be cut out in case it is disabled. The handle of the cut-out cock stands parallel with the pipe when the discharge valve is cut out, and at right angles to it when cut in. Also, the cut-out cocks in the signal pipe on either side of the signal hose are closed when the handles stand parallel with the pipe, and open when at right angles to it. The couplings in the signal hose are of a different size from those in the air-brake hose; thus, the signal hose and brake hose cannot be coupled by mistake.

THE SIGNAL VALVE

8. The signal valve, Fig. 7, is located under the cab, either on the engineer's or the fireman's side. The signal

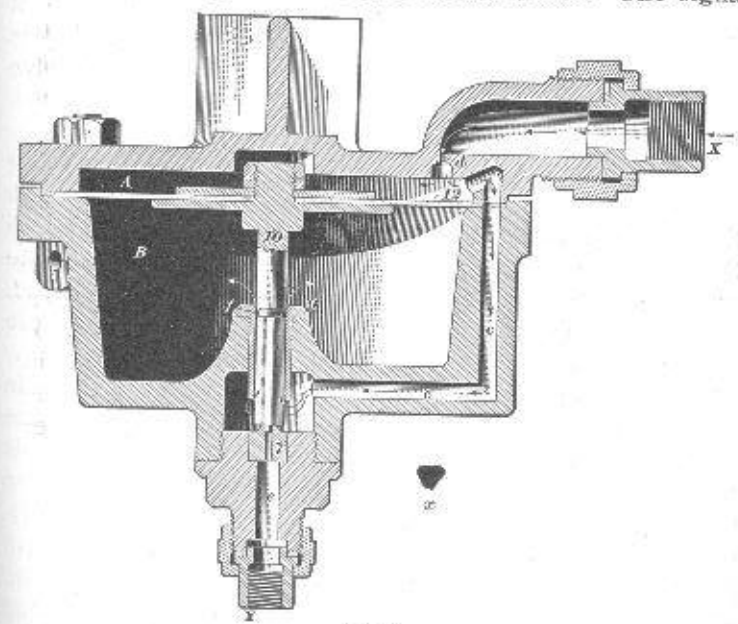

Fig. 7

pipe connects at *X*, while a pipe leads from *Y* to the whistle. The valve body is divided into two chambers *A* and *B* by

the rubber diaphragm *12*, which is attached to and operates the diaphragm stem *10*. This stem extends through the bushing *9*, and its end forms a valve (with seat in bushing *7*) that controls the passage *e* leading to the whistle. A small portion of the stem *10* fits the bushing *9* snugly; below this a groove *f* is cut around the stem. Below groove *f* the stem is milled to a cross-section like that shown at *x*. Port *d* is made small so as to restrict the flow of air into and out of chamber *A* sufficiently to cause chamber *A* pressure to charge at about the same rate for different lengths of train. This is necessary in order to make the signal valve operate the same on both short and long trains. A given reduction in signal-pipe pressure can be made much more quickly on a short train than on a long one, so that if port *d* were not restricted, chamber *A* pressure would change much faster on a short train than on a long one. With port *d* of its present size, however, chamber *A* pressure charges at nearly the same rate for long and short trains, so that the signal valve operates about the same on trains of different length.

9. Operation of Valve.—When the signal pipe is being charged, air enters the signal valve at *X*, and, passing through the small port *d*, charges chamber *A*. It also passes through the passage *cc* and feeds up slowly past the stem *10* into chamber *B*, charging this to the same pressure as chamber *A*. The pressures in chambers *A* and *B* and the signal pipe are equal when the pipe is fully charged.

When the signal cord is pulled and a reduction is made in the signal pipe, it causes a reduction of pressure in the signal valve also; but, since the stem *10* makes a rather snug fit, the pressure in chamber *A* above the diaphragm reduces faster than the pressure in chamber *B*; consequently, the diaphragm is forced upwards, and raises the stem *10*, thus opening the port in valve seat *7*. The stem *10* is lifted until the groove *f* is above the bushing *9*, when the air in chamber *B* escapes quickly through the groove *f*, the milled spaces in the stem *10*, and the passage *e*, out to *Y* and the whistle, causing the latter to give a blast. Air also escapes

from chamber *A* to the whistle, through the passages *cc* and *e*, but is restricted in its passage from the train signal pipe into *A* by the small port *d*.

The same reduction of pressure that operates the signal valve also opens the reducing valve, allowing air from main reservoir to flow into, and raise the pressure in, the signal pipe. This increase of pressure, following the closing of the car discharge valve, and immediately after the reduction in signal valve, increases the pressure in chamber *A* faster than in chamber *B*, thus forcing the diaphragm downwards, closing the valve leading to passage *e*, and stopping the blast of the whistle.

SIGNALING

10. In **transmitting signals** by means of the air-signaling system, certain precautions must be observed in order to obtain good results. For each blast of the whistle, the car discharge valve should be held wide open just long enough to reduce the pressure in the signal pipe clear up to the signal valve on the engine, when it should be closed. It should then be allowed to remain closed until the pressure has equalized throughout the system, before it is again opened to transmit another signal. If the discharge valve is opened a second and, possibly, a third time before the whistle has ceased to blow due to the first reduction, the whistle will give one long blast instead of two or three short ones, as intended. If it is opened a second time before the pressure has fully equalized in the signal pipe, the whistle will give a blast after each discharge, but the last blast will be weak on account of the pressure being less than 40 pounds. If the discharge valve is not held wide open when giving a signal, the reducing valve may feed air into the signal pipe as fast as it escapes from the car discharge valve and the whistle will not give a blast.

In transmitting signals, the best results will be obtained if the car discharge valve is allowed to remain closed from 2 to 3 seconds between blasts, depending on the length of the

train; that is, for each blast, pull the signal cord straight downwards and hold the discharge valve wide open for 1 second; then allow from 2 to 3 seconds for the pressure to equalize throughout the signal pipe before opening it for another blast. As it takes a longer or heavier discharge from the signal pipe from the rear car of a long train than from the front car, it will take longer for the signal pipe to equalize and a longer interval between the blasts is necessary to get perfect signals.

DEFECTS IN THE SIGNALING SYSTEM

11. Although the air-signaling system has only comparatively few parts, good judgment is required to locate defects that cause incorrect signals to be given. Another thing to consider is that it is not so much the amount of the reduction as the rapidity with which it is made, that causes the whistle to blow.

SIGNAL PIPE FAILS TO CHARGE

12. If no air passes into the signal pipe, first see whether the cocks on each side of the hose between the tender and train have been opened. If so, plug cock *2* may be closed, or the opening in plug *16* of the reducing valve, Fig. 5, may be stopped up with oil and dirt, or the lining in the hose may be loose and blocking the passage; or, if the weather is cold, the signal pipe on the engine or tender may be stopped up with ice, or the reducing valve may be frozen up.

NO EXHAUST FROM DISCHARGE VALVE

13. If no exhaust occurs at the discharge valve when the signal cord is pulled, the signal pipe being properly charged, the trouble may be due to the cut-out cock, Fig. 1 (usually placed in the saloon), being turned so as to cut out the discharge valve, to a loose seat in discharge valve *3*, to a stopped-up strainer in the signal pipe **T**, or to a collapsed hose lining.

WHISTLE FAILS TO BLOW

14. If an exhaust occurs at the discharge valve when the signal cord is pulled, but the signal whistle fails to give a blast, the trouble may be due to the strainer in the **T**, where the branch pipe connects with the signal pipe, being stopped up (see Fig. 1). In this case, the exhaust may sound all right, since there is considerable air in the branch pipe between the strainer and the discharge valve, but the air in the main pipe cannot get past the strainer fast enough to make a sufficiently quick reduction to operate the signal valve. If the trouble is not in the strainer, it may be that: port *d* of the signal valve is stopped up, in which case no air can enter the valve to charge it; stem *10* of signal valve has worn sufficiently loose in bushing *9* to allow pressure in chamber *B* to reduce about as fast as that in chamber *A*; the signal-valve diaphragm is bagged or, possibly, cracked; the bell of the signal whistle is imperfectly adjusted or its bowl is full of dirt; the whistle is so situated that wind blowing across the bowl prevents it from sounding; or it may be dirt in port of bushing *7*.

If poor rubber is used in the diaphragm, or if oil gets on it, the rubber will, in time, stretch and bag. In that event, when a signal-pipe reduction is made, the diaphragm will respond to it without raising the stem *10* from its seat in *7*, and no blast will result. An overheated air pump also tends greatly to heat the rubber and buckle or distort the diaphragm. In some cases, the diaphragm cracks, causing chambers *A* and *B* to become directly connected, in which case it is impossible to produce the difference in pressure on the two faces of the diaphragm necessary to operate the signal valve.

WHISTLE GIVES ONE LONG BLAST

15. If, in transmitting a signal, the whistle simply gives one long blast, it may be due either to the reductions being made too close together, or to the diaphragm stem *10* of the signal valve working stiffly in the bushing *9*, in which event

the passage at *e* would remain open until sufficient difference of pressure existed in chambers *A* and *B* to force stem *10* to its seat. Also, a sluggish signal reducing valve, by not opening promptly, will make the blast longer than it should be.

WHISTLE BLOWS WHEN BRAKES ARE RELEASED

16. If the whistle blows every time the brakes are released, it indicates that there is direct connection between the main reservoir and signal pipe, and that the latter is charged to main-reservoir pressure. This may be due to valve *4* of the reducing valve being held open by dirt on its seat, to too much tension in spring *9*, or to cap nut *5* being screwed up so tight that it is twisted out of shape and will not allow supply valve *4* to seat properly; or (in the old-style reducing valve, Fig. 4) to spring *10* being broken or too short, so that it does not force valve *4* to its seat.

The reason why the whistle blows when the brakes are released is as follows: As there is a direct opening between the signal pipe and the main reservoir, air will flow from the former to the latter every time the main-reservoir pressure is reduced in releasing the brakes. This causes a reduction of signal-pipe pressure right at the signal valve. This, if the opening through the reducing valve is large enough and the main-reservoir pressure is reduced sufficiently fast, will operate the signal valve and cause the whistle to give a blast. If the opening through the reducing valve is small, the whistle may not sound if the signal pipe is long, whereas it may do so on a short train or on a long engine.

Main-reservoir pressure in the signal pipe can be detected from the train by a stronger discharge of air from the discharge valve when the signal cord is pulled; on the engine it will be indicated by the signal whistle screeching, due to the fact that the bell of the whistle is adjusted for 40 pounds pressure and not for 90.

If the signal-pipe pressure is much less than 40 pounds, the discharge will be weaker than it should be when the cord is pulled, and the whistle will give a weaker blast than it should.

WHISTLE GIVES WEAK BLAST

17. Sometimes the whistle only gives a weak blast when the cord is pulled. This may be due to the regulating spring of the reducing valve being too weak, so that there is less than 40 pounds in the signal pipe; the whistle may be full of dirt or be improperly adjusted; or the passage through the bushing *7* in the signal valve, Fig. 7, may be partly stopped up with oil and dirt.

SIGNAL VALVE LEAKS

18. If, in the signal valve, Fig. 7, the valve formed by the end of the stem *10* leaks or is held from its seat on bushing *7* by dirt, there will be a constant blow at the whistle.

LEAKY CAR DISCHARGE VALVE

19. A leaky car discharge valve, due either to dirt on the seat of the valve or to a defective valve seat, is a common source of trouble. If dirt on the valve seat is the cause of the leak, opening and closing the valve will blow the dirt off. As a rule this leak will be supplied by the reducing valve without causing a blast of the whistle. If the leak is such as to sound the whistle, and the valve cannot be replaced or repaired on the road, cut the valve out of service by closing the cut-out cock on the signal-pipe cross-over pipe.

STEM *10* TOO TIGHT IN BUSHING *9*

20. The accuracy with which signals can be transmitted depends, to a considerable extent, on the fit of the stem *10* in the bushing *9*. If it makes too tight a fit, the whistle will give one long blast instead of the usual short ones, as already explained. Also, signal-pipe leakage is liable to operate the signal valve and cause the whistle to sound a blast, and the signal valve will not respond to a short, light reduction.

WHISTLE BLOWS ON SHORT TRAIN BUT NOT FROM REAR END OF LONG TRAIN

21. If the fit of the stem is too loose or the diaphragm is baggy, the signal valve may not be affected by leaks; neither will it respond to a light, quick reduction in signal-pipe pressure. Also, when the train is short, the signal valve will respond to a reduction made on any of the cars in the train; but on a long train, the volume of air in the signal pipe is so much larger that a reduction through the car discharge valve from the rear cars may not produce a reduction sufficiently rapid at the signal valve to operate that valve, and the whistle will not sound.

WHISTLE GIVES TWO OR MORE BLASTS INSTEAD OF ONE

22. If the stem *10* of the signal valve fits too loosely in bushing *9* and the train is short, the whistle, when the cord is pulled, is liable to give two or three blasts instead of one. This is brought about as follows: As the cord is pulled, a reduction is made in the signal valve above the diaphragm, which causes the diaphragm to be raised, thus allowing air to escape from chamber *B* to the whistle, causing it to give a blast. The pressures in chambers *A* and *B* immediately equalize, causing the stem valve to close and stop the whistle. Then, as the reduction in the signal pipe continues, another difference in pressure forms between chambers *A* and *B*, causing the stem valve to be again opened and sounding another blast. In this way, two or more blasts may occur when but one reduction is made. When the stem fits properly, the pressure in the chamber above the diaphragm increases much faster than that in the chamber below it; hence, the diaphragm is held down and a second blast does not occur. In case the signal whistle gives two blasts when the cord is pulled, it can be remedied by lowering the stem *10* in the bushing *9*. The length of fit of the stem in its bushing should never be less than $\frac{1}{32}$ inch, nor more than $\frac{1}{16}$ inch, measuring from the top of groove *f* to the top of bushing *9*.

WHISTLE BLOWS WITHOUT APPARENT CAUSE

23. This is caused by a leak in the signal pipe, and occurs while the engine is running along. The leak reduces the pressure in chamber *A* of the signal valve just a little below that in chamber *B*, so that a very slight jar of the engine will sometimes cause the diaphragm to rise and open stem valve *10*, thus causing a blast of the whistle. This trouble is aggravated if the supply valve of the reducing valve rusts a little or sticks, caused by its freezing or otherwise.

DOUBLE-HEADING

24. In double-heading, the whistles on both engines should sound each time a signal-pipe reduction is made. If they do not, close the cut-out cock in the reducing valve on the second engine: this reducing valve feeding into the signal valves prevents the signal-pipe reduction passing to the head engine to operate the signal valve.

TERMINAL TEST OF AIR-SIGNAL APPARATUS

25. In making up a train, the air-signal hose should be connected up at the same time the air-brake hose is, and all the signal-pipe cocks opened except the rear cock on the last car of the train; this should be closed, and the signal hose hung up properly. While looking over the train for leaks, the signal hose and couplings and also the car discharge valves should be inspected to see if they are in good condition. If a discharge valve is found to be leaking, jerk it open a few times; if this does not remedy the leak, the valve needs a new gasket. If a discharge valve is found defective while on the road, it should be cut out by closing the cut-out cock in the branch pipe; the conductor should be notified and report the same for repairs at the end of the run. In testing the signal system, signals should be transmitted from the rear car, from a car in the center, and also from the car next to the engine.

To test the reducing valve from the brake valve, start the pump with the brake valve on lap and the tender angle cock open. When the pressure reaches 50 pounds, stop the pump and at regular intervals move the brake valve to running position for a few seconds and back to lap. This will reduce the reservoir pressure gradually; when it reaches a pressure slightly below that at which the reducing valve operates, air will pass out of the signal pipe into the reservoir, causing a signal-pipe reduction that makes the whistle blow.

TESTING DEVICE

26. A device for testing the signal apparatus consists of a signal-hose coupler fitted with an air gauge and a small petcock having a $\frac{1}{8}$-inch hole in it. When this device is coupled to the signal hose, and the signal-pipe stop-cock is opened, the signal-pipe pressure will be indicated by the air gauge, while, by means of the petcock, a reduction of any amount or duration may be made in the signal-pipe pressure.

27. Using the Device.—The **testing device** may be used to determine the condition of the air-signal reducing valve as follows: First open the cut-out cock and then connect the device into the signal pipe and charge the latter to standard pressure. Opening the cut-out cock first reduces signal-pipe pressure and thus protects the gauge. Also, the gauge will indicate the condition of the reducing valve by showing the rate of increase of signal-pipe pressure. Next open the petcock wide, make a 10-pound reduction, and note the time required to raise the pressure to standard again. If the pressure rises slowly and the reducing valve is of the improved type, the passage through the valve is probably reduced by gum and dirt, and the valve should be thoroughly cleaned. If the reducing valve is of the old style, it may be that the supply valve does not open sufficiently to admit of its feeding faster, and the valve should be taken down and repaired.

To test the signal valve, make a slow, gradual reduction of about the same magnitude as the leaks in the signal pipe would amount to; then gradually increase the rate of discharge until the signal whistle sounds. If the whistle blows when a slow gradual reduction is being made, it indicates that the stem *10* is not too loose a fit in the bushing *9*, and that the pressure on the under side of the diaphragm cannot escape as the pressure above is reduced. The consequence is that the pressure in chamber *B* raises the diaphragm as soon as a sufficient difference of pressure is established between the chambers on either side of the diaphragm, and air discharges into the whistle, causing it to sound. If the whistle does not blow when a slow, gradual reduction is made, the indications are that the stem *10* fits too loosely in the bushing *9* or the diaphragm is bagged. If the stem is too tight in the bushing *9*, the signal valve will not close promptly and the blast will be drawn out longer than it should.

This device should be used as frequently as convenient so as to keep the apparatus in good condition. The test should be made before the engine leaves the roundhouse so that all necessary repairs can be made before the engine is coupled to the train.