D-22-P PASSENGER CAR BRAKE EQUIPMENT

with

D-22-AR CONTROL VALVE

INSTPUCTION PAMPHLET

No. 5050-7

SEPTEMBER, 1948

NEW YORK AIR BRAKE COMPANY
A UNIT OF GENERAL SIGNAL CORPORATION
230 PARK AVENUE • NEW YORK, N.Y. • 10017

CONTENTS

TITLE	PAGE
D-22-P Passenger Car Brake Equipment with D-22-AR Control Valve	3
Parts of the Equipment	7
Description of the Parts	
D-22-AR Control Valve	10
Combined Auxiliary, Emergency and Displacement Reservoir	36
B-3 Relay Valve	38
F-6 Relay Valve	40
A-2 Quick Service Valve	48
Brake Cylinder	50
Automatic Slack Adjuster	54
Emergency Brake (Conductor's) Valve and Brake Application Valve	58
Branch Pipe Tee	60
Pressure Retaining Valve	61
Combined Dirt Collector and Cut-out Cock	64
Angle Cock	65
Brake Cylinder Cut-out Cocks	67
Reinforced Flanged Fittings	68
Hose Connections	70
Operation of the Equipment	71
Installation and Maintenance	105
Lubrication	106
General Hints	111
3-AP Decelostat Equipment	Appendix

D-22-P
PASSENGER CAR BRAKE EQUIPMENT WITH D-22-AR CONTROL VALVE

The functional characteristics of this brake equipment include the proven desirable elements of its predecessors in this class of service with the addition of features that provide a brake of greater flexibility as required for high speed operation of modern trains. Faster and more certain brake action is provided by features which produce improved functions in the following respects:

Improved Quick Service

This improved quick service feature operates during initial service brake application to insure fast transmission with positive movement of the service slide valve to application position regardless of service slide valve friction.

This feature, during initial application, also provides a limited, positive and uniform development of brake cylinder pressure on all cars with a minimum brake pipe reduction, which permits the train slack to adjust promptly without harsh action.

On split reductions, as generally used in passenger service, the quick service activity is continued at each successive reduction so that a fast rate of transmission is obtained on both initial and succeeding service brake pipe reductions.

Improved Service Stability

The possibility of undesired light service applications, resulting from minor fluctuations in brake pipe pressure, is minimized, as the displacement reservoir exhaust remains open until the service slide valve moves to service position. This insures that only a reduction at service rate will develop sufficient differential to move the piston, graduating valve, and slide valve to close the exhaust and permit development of brake cylinder pressure.

Improved Service Release

Positive release is insured regardless of service slide valve friction by a release insuring feature, which operates positively to release the brake when brake pipe pressure exceeds auxiliary reservoir pressure by more than 2 pounds.

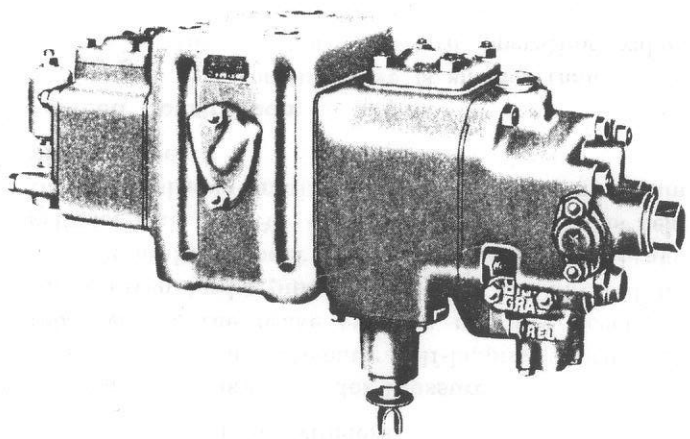

Fig. 1. Exterior View of the D-22-AR Control Valve

Improved Graduated Release

The operation of this feature is such that an exceedingly uniform and flexible brake cylinder pressure release is secured on all cars when graduating off the brake.

Improved Emergency Transmission Speed

This is most important during emergency brake application because it accomplishes a further improvement in control of slack action as compared to previous standard brake equipment.

Improved Release After Emergency

By the use of an accelerated release feature, a faster and more positive release is obtained than with the previous standard passenger brake. This is accomplished by connecting displacement reservoir and auxiliary reservoir air to the brake pipe during initial release to increase brake pipe pressure locally, thereby supplementing air flow from the brake valve to provide a fast rise in brake pipe pressure. This operation also makes a definite reduction of auxiliary reservoir pressure to insure positive and prompt release.

Increased Capacity

The maximum brake cylinder volume for which previous passenger brake control valves were designed is the equivalent of two 16 inch brake cylinders.

The D-22-AR control valve is designed as a piloting device for operation of one or more large capacity relay valves; therefore, one standard control valve

may be used with any desired number, size, or arrangement of brake cylinders.

More Uniform Brake Cylinder Pressure

Because of the automatic self-lapping feature of relay valves, the brake cylinder pressure developed for a given brake pipe reduction is not affected by varying brake cylinder piston travel or normal brake cylinder leakage. Air consumption, of course, is held to the desirable minimum with uniform minimum piston travel.

Simplified Construction

The D-22-AR Control Valve is smaller than is the case with the previous standard operating valve. Space required for installation is also less by reason of combining in one structure the volume of the emergency, auxiliary and displacement reservoirs.

Because of more simple construction, the weight of the operating devices comprising this latest equipment is materially reduced as compared to the previous standard equipment.

Harmonious Interchange

The equipment operates in harmony with the previous standard passenger car brake when cars having either the previous or new standard equipment are associated in the same train.

Electro-Pneumatic Conversion

The brake equipment is so designed that it can readily be adapted for electro-pneumatic operation with speed governor control for high speed service by the addition of the necessary available devices. (See Instruction Pamphlet No. 60.)

PARTS OF THE EQUIPMENT

The following is a list of the parts which make up the equipment, with a short description of each. The piping and relative location of the parts are shown on Plate 10, at the back of the book.

1. *A D-22-AR Control Valve* which corresponds in a general way to the universal valve now in common use. It operates to control the admission of air to and exhaust from the relay valve and to charge the reservoirs.

2. *A B-3 or F-6 Relay Valve* which relays the application and release operation of the control valve. The B-3 reproduces in the brake cylinders the equivalent pressure established in the displacement reservoir. The F-6 reproduces brake cylinder pressure in an approximate 60% ratio to displacement reservoir pressure.

Fig. 2. Combined Auxiliary, Emergency and Displacement Reservoir

3. *An A-2 Quick Service Valve* which transmits local quick service activity from car to car to provide fast transmission of the brake pipe reduction, particularly on successive brake pipe reductions following the initial reduction.

4. *A Combined Auxiliary, Emergency and Displacement Reservoir.* The displacement reservoir provides the required operating volume to develop the proper relation of brake pipe reduction. The auxiliary reservoir provides the air supply for proper functioning of the control valve service portion. The emergency reservoir air is used to provide the quick recharge, graduated release and high emergency pressure features.

5. *Brake Cylinders* with pistons and rods so connected through the brake levers and rods to the brake shoes that when the pistons are forced outward by the air pressure, this force is transmitted through the rods and levers to the brake shoes and applies them to the wheels.

6. *Two Supply Reservoirs,* which provide the air supply for the brake cylinders.

7. *Two B-3-B Emergency-brake (Conductor's) Valves,* one at each end of the car, permit the conductor to apply the brake in case of accident or emergency.

8. *Two E-3 Brake Application Valves,* one in the brake pipe branch to each conductor's valve, function to vent the brake pipe when actuated by a conductor's valve.

9. *A Combined Dirt Collector and Cut-out Cock* is mounted on the control valve pipe bracket. The purpose of the dirt collector is to prevent entrance into the control valve of pipe scale, sand, cinders, or foreign particles of

any kind. The cut-out cock provides a means of closing the pipe connections between the control valve and the brake pipe.

10. *Four Branch Pipe Tees,* which are bolted to the car underframe by means of bolting lugs. The purpose of the branch pipe tee is to prevent the passage of excessive moisture from the brake pipe into the branch pipe fittings.

11. *A Pressure Retaining Valve* which is connected by piping to the control valve exhaust. Its purpose, when the handle is placed in retaining position, is to retard the rate of brake cylinder exhaust while recharging the equipment.

12. *An Automatic Slack Adjuster,* used with each brake cylinder, maintains a predetermined brake cylinder piston travel.

13. *Various cut-out cocks, hose connections, dummy couplings, fittings, etc.,* incidental to the piping, the location and uses of which will be readily understood from the piping diagram of the equipment, and the description which follows.

The train air signal equipment is included on the piping diagram, Plate 10, but is not part of the brake equipment. It provides a means whereby signals may be transmitted from any part of the train to the locomotive and is described in a separate publication—Instruction Pamphlet No. 5061.

The No. 3-AP Decelostat Equipment, shown in dotted line on Plate 10, is not a part of the brake equipment but is recommended for wheel slip control, see Appendix.

DESCRIPTION OF THE PARTS

D-22-AR Control Valve

The D-22-AR Control Valve consists of three portions as follows:

1. *A Two Face Pipe Bracket* to which are bolted the service portion and the emergency portion. The bracket is bolted to the car under-framing, all pipe connections being made permanently to the bracket by means of reinforced flanged unions so that no pipe joints need be disturbed when removing or replacing the operating portions.

2. *The Service Portion,* which controls the desired charging of the reservoirs and the service application and release of the brakes. It provides the proven desirable operating features of the universal passenger car service brake with improved quick service transmission, release insuring, release interlock and graduated release features.

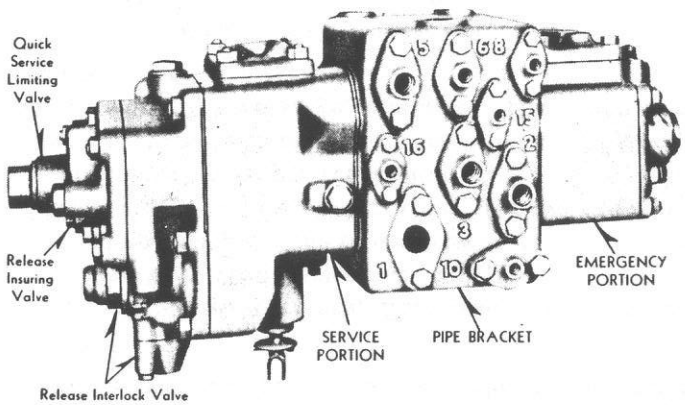

Fig. 3. Rear View of the D-22-AR Control Valve

3. *The Emergency Portion,* which controls the quick action feature, high emergency brake cylinder pressure and the accelerated emergency release function. It provides the proven desirable operating features of the universal passenger car emergency brake with improved emergency transmission and accelerated release after emergency application.

The PIPE BRACKET contains the quick action chamber, a removable filter element 12, three choke plugs in the service portion face and one choke plug in the emergency portion face. These plugs are identified by reference numbers on Fig. 6 and Plate 1 as follows:

7. *Exhaust Choke Plug,* which controls the rate of exhaust from the displacement reservoir when releasing the brake.

8. *Service Choke Plug,* which controls the rate of displacement reservoir build-up when a service brake application is made.

14. *Preliminary Quick Service Choke Plug,* which controls the rate of brake pipe flow to the quick service volume during the first stage of preliminary quick service application.

21. *Emergency Choke Plug,* which controls the rate of displacement reservoir build-up from the emergency reservoir when an emergency brake application is made.

The pipe bracket has the necessary pipe connections for later conversion to electro-pneumatic operation, as shown on Plate 10. These connections are Nos. 8 and 15 which have blanking flanges for automatic service. Also,

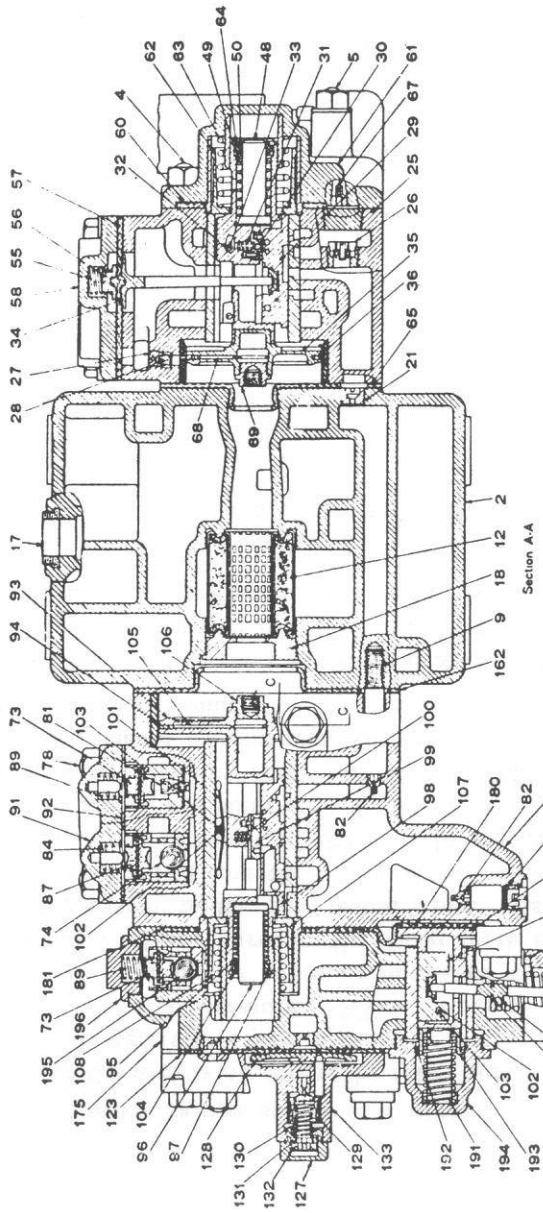

Fig. 4. Sectional View of the D-22-AR Control Valve

blanking plate 10, on the opposite side of the pipe bracket, is arranged to permit substitution of a check valve portion for electro-pneumatic service.

The three suspension bolt holes through the bracket are protected to prevent accumulation of water and freezing. The two front holes are cut away in the middle while the rear is protected by sealing ring 17, as shown in Fig. 4.

The SERVICE PORTION Parts:

(a) *The service piston 93 with its packing ring 94,* which moves in its bushing in accordance with variations in air pressure across the piston head and thereby controls charging of the auxiliary and emergency reservoirs. This piston will be found to be of the self-lubricating type. An oil chamber is formed in the piston head and is closed by a cap nut 106 which is tapped for application of the piston stop stem used for testing purposes. The piston head is drilled from its periphery with a passage projecting radially inward to the oil chamber. Also projecting radially inward is a third drilled passage which has a choke at the entrance to the oil chamber. An arcuate depression is formed at the bottom of the ring groove connecting these three drilled passages. An oil wick 105 is threaded into the unchoked passage from the oil chamber and is bent across the arcuate depression and into the shallow passage for anchorage. The lower end of the oil wick is formed into a U-shaped loop.

The oil in the oil chamber creeps up the wick by capillary flow and saturates with lubricating fluid the

upper end of the wick lying across the surge port. When fully charged the air pressure in the oil chamber is the same as brake pipe pressure. When brake pipe reductions occur, the higher pressure in the oil chamber causes a surge of air through the surge port to the arcuate depression under the piston ring. As this surge of air passes around the upper looped end of the oil wick, lubricant is blown off the wick to the interior of the ring groove and finds its way to the piston ring and bushing by capillary flow. Oil which is blown off the wick is replaced by continued capillary flow up the wick from the oil chamber.

(b) *The service slide valve 98,* which is attached to the stem of the service piston by pin 102 and lock 103 and held to a seat in its bushing by leaf spring 101.

(c) *The service graduating valve 99,* which is shouldered in the piston and held to a seat on the service slide valve by coil spring 100.

The service slide valve and graduating valve move with the service piston to establish the following port connections in the various positions:

(1) Auxiliary reservoir (service slide valve chamber), as controlled by the graduating valve, to the spring chamber of the release piston in release and preliminary quick service positions for the purpose of holding the release slide valve exhaust *open* in these positions; the service slide valve exhaust to the spring chamber of the release piston in service and service lap positions, and the release interlock slide valve exhaust to the spring chamber of the release piston in graduated release lap position,

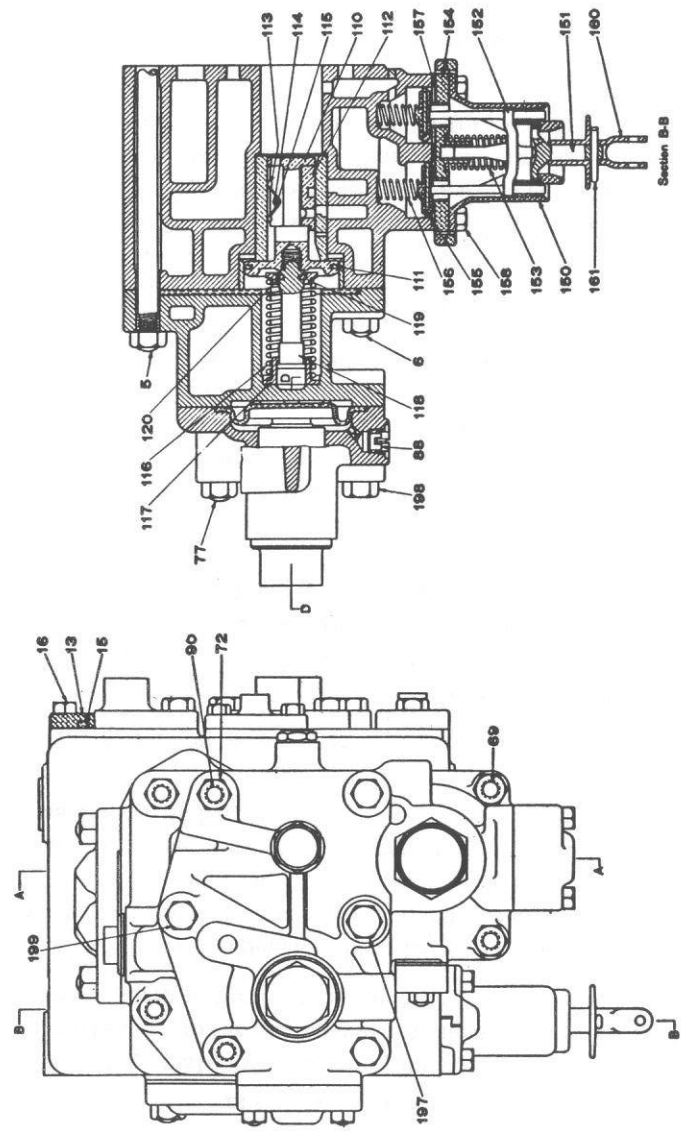

Fig. 5. Release Piston and Slide Valve, and Duplex Release Valve Assembly. Outline Service End of the D-22-AR Control Valve

for the purpose of holding the release slide valve exhaust *closed* in these positions.

(2) Brake pipe air through the graduating valve to the Q. S. Vol. in preliminary quick service position to provide a controlled local reduction in brake pipe pressure.

(3) Brake pipe air to the displacement reservoir in service position to transmit quick service application until a predetermined displacement reservoir pressure of approximately 10 pounds is built up.

(4) Auxiliary reservoir air from the service slide valve chamber past the graduating valve to the displacement reservoir to provide a service brake application in service position.

(5) Auxiliary reservoir air from the service slide valve chamber to the release insuring valve with the slide valve in release, preliminary quick service and graduated release lap positions; and the release insuring valve to the service slide valve exhaust in service and service lap positions for the purpose of providing a positive movement of the service piston to release position whenever brake pipe pressure has a 2 pound differential over auxiliary reservoir pressure.

(d) *The service piston return spring 108*, and *cage 107*, which prevent movement of the service piston beyond release position unless brake pipe pressure is about three pounds higher than auxiliary reservoir. In this event, brake pipe pressure under the graduating valve is cut off by the slide valve to prevent possibility of blowing the graduating valve off its seat.

(e) *The service piston spring 95 and the spring guide 96*, which provide stability of quick service activity by preventing movement of the service piston to preliminary quick service position until a predetermined difference in pressure between the brake pipe and the auxiliary reservoir is attained.

(f) *The supply reservoir charging check valve 87 and ball check valve 74*, which permit charging flow from auxiliary reservoir to the supply reservoir but prevent back flow.

(g) *The auxiliary reservoir charging check valve 73*, which permits brake pipe air to charge the reservoir with the service piston in release position, but prevents any back flow of auxiliary reservoir air.

(h) *The supply reservoir charging check valve 73a and ball check valve 74a*, which permit charging flow from brake pipe to supply reservoir but prevent back flow.

(i) *The back flow check valve 73b and ball check valve 74b*, which prevent flow of displacement reservoir air into the brake pipe, such as during emergency application when displacement reservoir pressure is higher than brake pipe.

(j) *The emergency reservoir charging check valve 73c and ball check valve 195*, which permit charging flow from auxiliary reservoir to emergency reservoir with the release piston and slide valve in release position but prevent back flow from emergency to auxiliary reservoir except as controlled by the release interlock valve during recharge.

(k) *The quick service limiting valve portion* which operates to terminate quick service activity after ap-

proximately 10 pounds displacement reservoir pressure is developed. This portion consists of a piston 137 with a slide valve 136 attached to the piston by pin 102 and lock 103. The position of the piston and slide valve on its seat is controlled by displacement reservoir pressure, acting on diaphragm 71, opposed by spring 140. When this pressure is less than approximately 10 pounds, the spring holds the slide valve in its forward position where a slide valve cavity connects two slide valve seat ports, controlling brake pipe air flow to the displacement reservoir during quick service operation. When this pressure exceeds approximately 10 pounds, the spring is overcome, the diaphragm deflects and moves the piston and slide valve to their rear position where the slide valve cavity disconnects the two seat ports. Strut spring 146 exerts its tension through strut 145 to hold the slide valve on its seat. Wasp excluder 88 protects the atmospheric vent to the slide valve chamber, which prevents pressure accumulation.

(l) *The release insuring valve portion* which operates positively to release the brake when brake pipe pressure exceeds auxiliary reservoir by more than 2 pounds. This portion consists of a release insuring cap in which is contained a release insuring valve 129 normally held seated by spring 130, closing a connection from the service slide valve. Follower 128 is in contact with release insuring diaphragm 123. One face of the diaphragm is exposed to brake pipe pressure through choke 177, the other face to service slide valve chamber pressure (auxiliary reservoir) through choke 176. With these pressures substantially equal the diaphragm remains balanced, but if brake pipe pressure exceeds

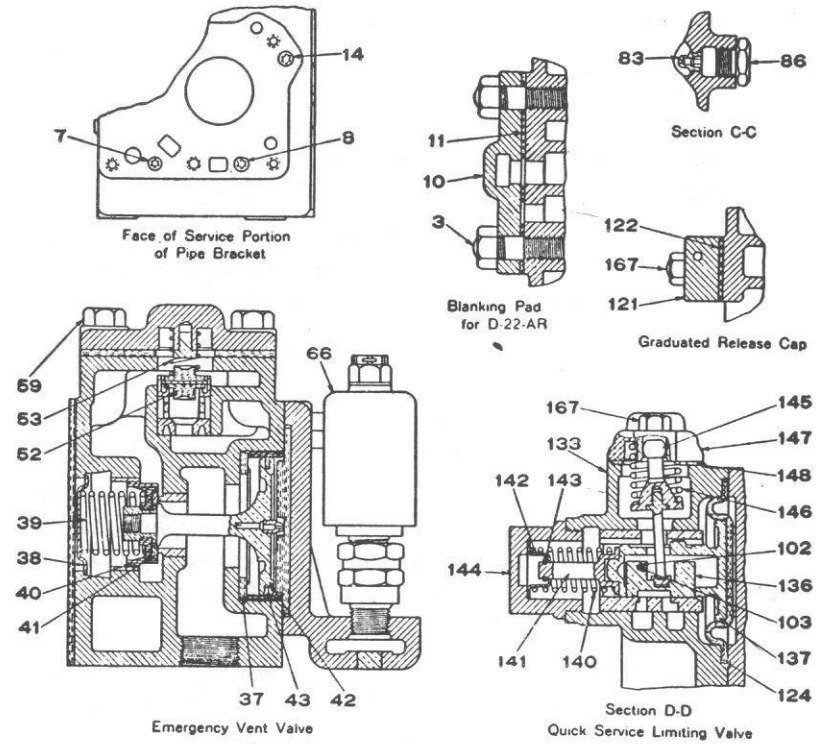

Fig. 6. Sectional Views of D-22-AR Control Valve Details

auxiliary reservoir pressure by more than 2 pounds the diaphragm is deflected, moving the follower and unseating the valve 129, which reduces auxiliary reservoir pressure to positively release the brake.

(m) *The release interlock valve portion* which controls the graduated release and quick recharge features. This portion consists of a piston 182 pinned to a slide valve 183 by pin 102 and lock 103, and held to its seat by spring 187 through strut 185. The slide valve has two positions on its seat between interlock diaphragm 180 and spring 191. The face of the diaphragm is connected to displacement reservoir pressure. With less than 7 pounds displacement reservoir pressure, spring 191 holds the piston and slide valve in forward position where the slide valve prevents flow from the emergency reservoir to the auxiliary reservoir. With approximately 10 pounds displacement reservoir pressure the spring is overcome and the diaphragm is deflected, moving the piston and slide valve to the rear position where a slide valve cavity connects the emergency reservoir to the auxiliary reservoir, thus providing quick recharge and graduated release functions. Check valves 73c and 195 in the emergency reservoir charging passage prevent back flow from the emergency to the auxiliary reservoir from this source so that recharge from the emergency reservoir can take place only as controlled by the release interlock slide valve.

This feature stabilizes the service piston, especially where the control valve is used with the electro-pneumatic brake system. During electro-pneumatic straight air brake applications, the auxiliary reservoir pressure

is reduced into the straight air pipe, the higher brake pipe pressure thus holding the service piston in release position. With the emergency reservoir positively cut off from the auxiliary reservoir by the release interlock valve the reduction is effectively obtained on the smaller volume of the auxiliary reservoir alone, thereby assuring a high differential of brake pipe pressure to hold the service piston in release position.

(n) *The graduated release cap 121* which conditions the valve for Graduated or Direct Release. The letters REL. are cast on the body below the graduated release cap. The letters DIR. and GRA. are cast on the cap. When the letters DIR. are over the letters REL., the valve is conditioned for Direct Release; when the letters GRA. are over the letters REL. the valve is conditioned for Graduated Release. The cap is set by removing two nuts and turning the cap so that either DIR. or GRA. line up with REL. on the body.

(o) *The release piston 110* which moves its attached release slide valve 112 in conjunction with spring 116 to open and close the displacement reservoir exhaust, and controls charging of the emergency reservoir in accordance with the position assumed by the service slide valve.

(p) *The charging chokes 81 and 83*, which control the charging flow of brake pipe air to the auxiliary reservoir. Choke 83 is located in the piston bushing and controls flow to the slide valve chamber. Choke 81 controls the flow through a number of holes in the bushing to the auxiliary reservoir, thence to the emergency and supply reservoirs.

(q) *The wasp excluder 88,* which protects the service slide valve and Q. S. Vol. exhaust from dirt and entrance of insects.

(r) *The quick service choke plug 82a,* which controls the flow of brake pipe air to the displacement reservoir during the third stage of quick service.

(s) *The duplex release valve,* handle 160 of which controls the opening of auxiliary reservoir release valve 155 and emergency reservoir release valve 155a, permitting manual reduction of auxiliary reservoir pressure alone or both reservoirs together.

(t) *The quick service volume, (Q. S. Vol.)* into which brake pipe air flows to initiate preliminary quick service.

(u) *The preliminary quick service exhaust choke plug 82,* which controls the continuous exhaust of quick service volume air to the atmosphere and provides the secondary quick service function.

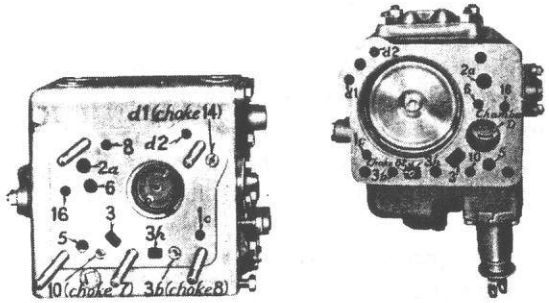

Fig. 7. Bolting Faces, Service Face of Pipe Bracket and Service Portion

The EMERGENCY PORTION Parts:

(a) *The emergency piston 35 with its packing ring 36,* which moves in its bushing in accordance with variations in air pressure across the piston head and thereby controls the charging of the *quick action chamber* in the pipe bracket. This piston will be found to be of the self-lubricating type, in the central hub of which is located an oil chamber from which oil flows to the ring groove and bushing by capillary flow and by a breathing action caused by brake pipe reductions in the same manner as described on page 13 for the service piston.

(b) *The emergency slide valve 29,* which is attached to the emergency piston by two pins 32 and two locks 33.

(c) *The emergency graduating valve 30,* which is shouldered in the piston and held to its seat on the emergency slide valve by coil spring 31.

The emergency slide valve and graduating valve move with the piston to establish the following port connections in the various positions:

(1) From quick action chamber, through the graduating valve, to atmosphere during service applications.

(2) From quick action chamber to vent valve piston 42 during emergency applications.

(3) From emergency reservoir to the spring side of high pressure valve 44 except during emergency applications.

(4) From spring side of high pressure valve 44 to atmosphere during emergency applications.

(5) From the displacement reservoir, past accelerated release check 52a, to the brake pipe during release after emergency.

(6) From displacement reservoir to the safety valve during a service application, and cuts off this connection during an emergency application.

(d) *Piston 42 and vent valve 40,* which vent brake pipe air to atmosphere during an emergency application.

(e) *The emergency piston return spring 63, and cage 62,* which, during release cycles, return the emergency piston from accelerated release to normal release position when quick action chamber pressure recharges to approximately brake pipe pressure.

(f) *The emergency piston spring 49, and spring guide 48,* which stabilize the emergency portion against undesired emergency.

(g) *The high pressure valve 44,* which connects emergency reservoir air to the displacement reservoir during emergency applications.

(h) *The spillover check valve 52 and ball check 51,* which provide against back flow from the emergency reservoir to the quick action chamber.

(i) *The accelerated release check valve 52a,* which prevents flow of brake pipe air into displacement reservoir and relay valve.

(j) *The diaphragm spring 55 and slide valve strut 34,* which serve to keep the slide valve seated in the absence of quick action chamber pressure.

(k) *The safety valve 66,* which limits displacement reservoir pressure during service brake applications to the safety valve setting. Since the safety valve is set to open at approximately 60 pounds and displacement reservoir pressure determines that supplied to the brake cylinders, service brake cylinder pressure is limited to this amount.

(l) *The charging choke plug 27,* which controls the rate of flow from the brake pipe to the quick action chamber. Felt strainer 28 protects the choke port against the possibility of restriction by fine dust.

(m) *The choke plug 20* in vent piston 42, and *choke 67* in the vent valve cylinder cover, which control the rate of exhaust of quick action chamber air during emergency application, and thus provide the time interval required before release can be effected following an emergency application.

(n) *Wasp Excluder 26* in the emergency exhaust which prevents the entrance of insects.

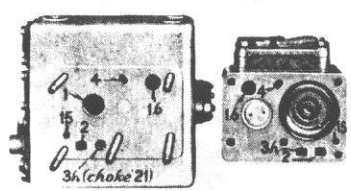

Fig. 8. Bolting Faces, Emergency Face of Pipe Bracket and Emergency Portion

PORT CONNECTIONS

Figs. 9, 10, 11 and 12

Service Graduating Valve

k—Cavity which connects graduating valve seat, ports *c* and *d* in preliminary quick service and service positions.

m—Cavity which connects graduating valve seat ports *a* and *b* in graduated release lap position.

Service Slide Valve

f—Service port extending from slide valve face to graduating valve seat. The graduating valve covers this port in release and service lap positions and opens it in all other positions. It registers with slide valve seat port *3b* in service and service lap positions.

c—Preliminary quick service port extending from the slide valve face to the graduating valve seat. It registers with slide valve seat port, *Q. S. Vol.* in release, preliminary quick service and graduated release lap positions.

d—Brake pipe port extending from the slide valve face to the graduating valve seat. It registers with slide valve seat port *d1* in release, preliminary quick service and graduated release lap positions.

a—Release piston control port extending from slide valve face to graduating valve seat. It registers with slide valve seat port *a1* in

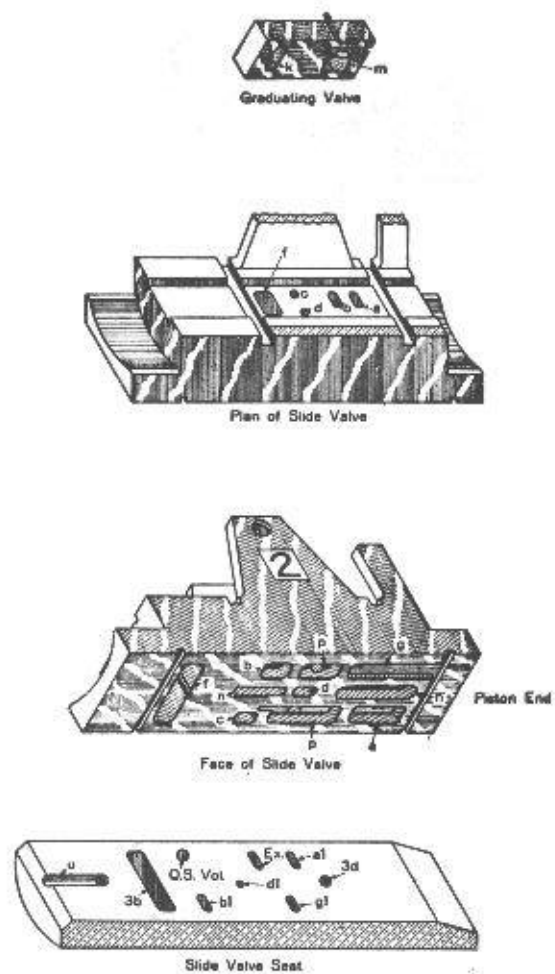

Fig. 9. Service Graduating Valve, Slide Valve and Seat

release, preliminary quick service and graduated release lap positions.

b—Release interlock port extending from slide valve face to graduating valve seat. It registers with slide valve seat port *b1* in release, preliminary quick service and graduated release lap positions.

p—Two drill-connected cavities. In service, and service lap positions the small cavity registers with seat port *g1*, and the large cavity connects seat ports *a1* and *Ex*. As the two cavities are drill-connected, they form a common exhaust cavity from seat ports *g1* and *a1*.

n—Two drilled-connected cavities, the larger of which registers with seat port *3d* in all positions. In service and service lap positions the smaller cavity registers with seat port *d1*, therefore the two seat ports *3d* and *d1* are drill-connected between the two cavities.

g—Cavity extending to the cross groove through which auxiliary reservoir air is supplied the cavity from the slide valve chamber at all times. The cavity registers with seat port *g1* in release, preliminary quick service and graduated release lap positions.

Service Slide Valve Seat

Ex.—Port to the exhaust through wasp excluder.

a1—Port to the spring chamber of the release piston.

b1—Port to release interlock slide valve seat.

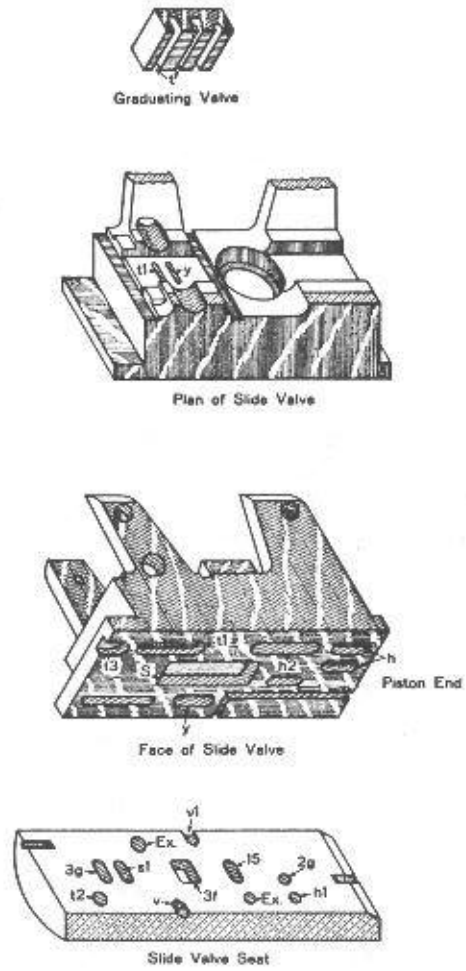

Fig. 10. Emergency Graduating Valve, Slide Valve and Seat

d1—Quick service port from brake pipe through choke 14.

3d—Quick service port to displacement reservoir through preliminary quick service choke plug 82a.

3b—Service port to displacement reservoir through service choke plug 8.

g1—Release insuring port to chamber M of the release insuring valve.

Q. S. Vol.—Port to the Quick Service Volume thence through choke 82 and wasp excluder to the exhaust, Ex.

u—Tail Port Connecting auxiliary reservoir from the slide valve chamber to the service slide valve port *f* in release, preliminary quick service, and graduated release lap positions.

Emergency Graduating Valve

t—Two slot-ports connecting quick action chamber air from the emergency slide valve chamber to the graduating valve seat on the slide valve. The middle port is smaller than the other *t* port. The middle *t* port permits flow of quick action chamber air to seat port *y* in service applications; the other *t* port permits flow of quick action chamber air to seat port *t1* in emergency applications. The third slot shown acts as a balancing port to balance air pressure uniformly over the entire area of the valve.

Emergency Slide Valve

y—Port extending from slide valve face to graduating valve seat. Registers with seat, port *Ex.* in release and accelerated release positions.

t1—Port extending from slide valve face to graduating valve seat. Registers with slide valve seat port *t2* in release and accelerated release positions.

h—Two drill-connected cavities which register with seat ports *2g* and *h1* in release and accelerated release positions.

h2—Two drill-connected cavities. In release and accelerated release positions the small cavity registers with seat port *15*, connecting this port to the large cavity which registers with slide valve *Ex.*, port. In emergency position the large cavity connects seat ports *h1* and *Ex.*

t3—Cavity, charged to quick action chamber pressure at all times, which connects to seat port *t2* in emergency position.

S—Cavity which connects seat ports *s1* and *3f* in release position; connects seat ports *s1*, *3f* and *3g* in accelerated release position; connects passages *3f* and *15* in emergency position.

The two cavities that have no designations are balancing ports which maintain balanced air pressure uniformly over the entire area of the slide valve.

Emergency Slide Valve Seat

Ex.—Two exhaust ports connecting to wasp excluder 26.

2g—Port to emergency reservoir, outer area of high pressure valve seat and to spillover check valves 51 and 52.

h1—Port to spring chamber of high pressure valve.

3f—Port to displacement reservoir through choke 21 and to inner area of high pressure valve.

15—Port to sanding connection 15 on pipe bracket, the latter being blanked when not used.

s1—Port to safety valve.

t2—Port to vent valve piston face.

3g—Port to accelerated release check valve 52a.

The unnumbered open-end cavities at each end and side are balancing cavities which maintain balanced, uniform air pressure between slide valve and seat.

Release Slide Valve

Q—Cavity connecting seat ports *3* and *10* in release position. The small *Q* port is drilled-connected to the main cavity and connects seat port *10* through the main cavity to seat port *r1* in application position.

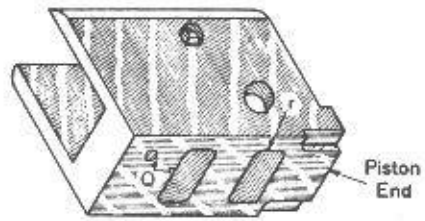

Plan of Slide Valve

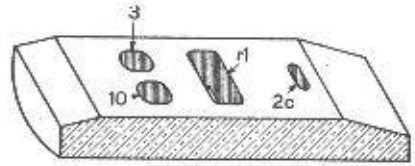

Slide Valve Seat

Fig. 11. Release Slide Valve and Seat

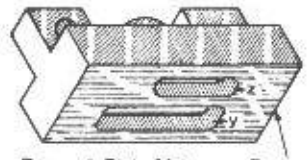

Face of Slide Valve Piston End

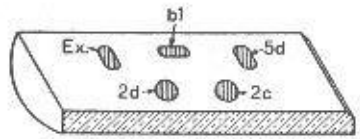

Slide Valve Seat

Fig. 12. Release Interlock Slide Valve and Seat

r—Port through the slide valve, connecting the slide valve chamber to seat port *r1* in release position.

Release Slide Valve Seat

2c—Charging port to emergency reservoir which is uncovered by the slide valve in release position, and covered in application position.

r1—Charging port to supply reservoirs.

3—Port to displacement reservoir.

10—Port through choke 7 to exhaust (at retaining valve, if used).

Release Interlock Slide Valve

y—Cavity which connects seat port *b1* to *5d* in release position and *b1* to *Ex.*, in application position.

z—Cavity which connects seat ports *2d* and *2c* in application position.

Release Interlock Slide Valve Seat

b1—Port to service slide valve seat.

5d—Port to the rear end of the service slide valve chamber (auxiliary reservoir pressure).

2c—Port to the release slide valve seat.

2d—Port to the emergency reservoir through graduated release cap.

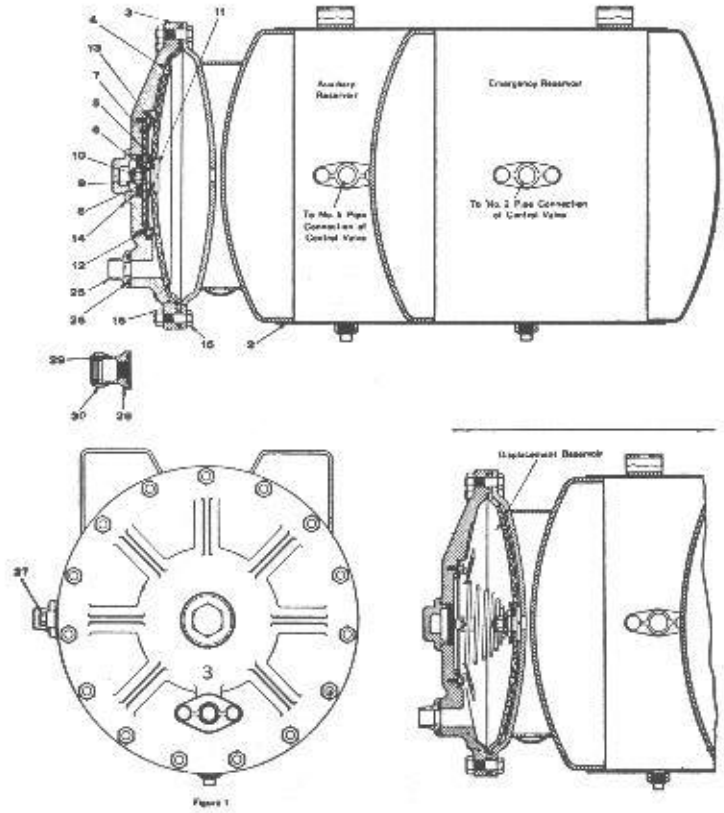

Fig. 13. Sectional Views of the Combined Reservoir showing the Displacement Diaphragm in Release and Applied Positions

Combined Auxiliary, Emergency and Displacement Reservoir

In order to provide for installation in the least possible space and keep weight as low as practical, these three reservoirs are combined in one structure.

The *auxiliary reservoir* is the local air supply used with the control valve to provide for proper functioning of the service portion.

The *emergency reservoir* is the local air supply used with the control valve to provide the quick recharge, graduated release and high emergency pressure features.

The *displacement reservoir* provides the required operating volume to develop the proper relation of brake pipe reduction. As previously described, the control valve operates to admit air to or exhaust air from this reservoir, the application and release rates being controlled by chokes 8 and 7 in the control valve pipe bracket. In this respect the equipment differs from previous equipment as in the latter the triple valve or universal valve applies and releases directly to the brake cylinders. Consequently when a brake application is made with the previous equipment the first few pounds of build-up in the brake cylinder is consumed in replacing the partial vacuum created by movement of the brake cylinder piston from release to application position. The action of diaphragm 4 and spring 7 (Fig. 13) in the displacement reservoir duplicates this condition on the new equipment. When a brake application is made the diaphragm is deflected, Fig. 13, increasing the volume so that the initial rate of pressure development is uniform with that of existing brake equipments.

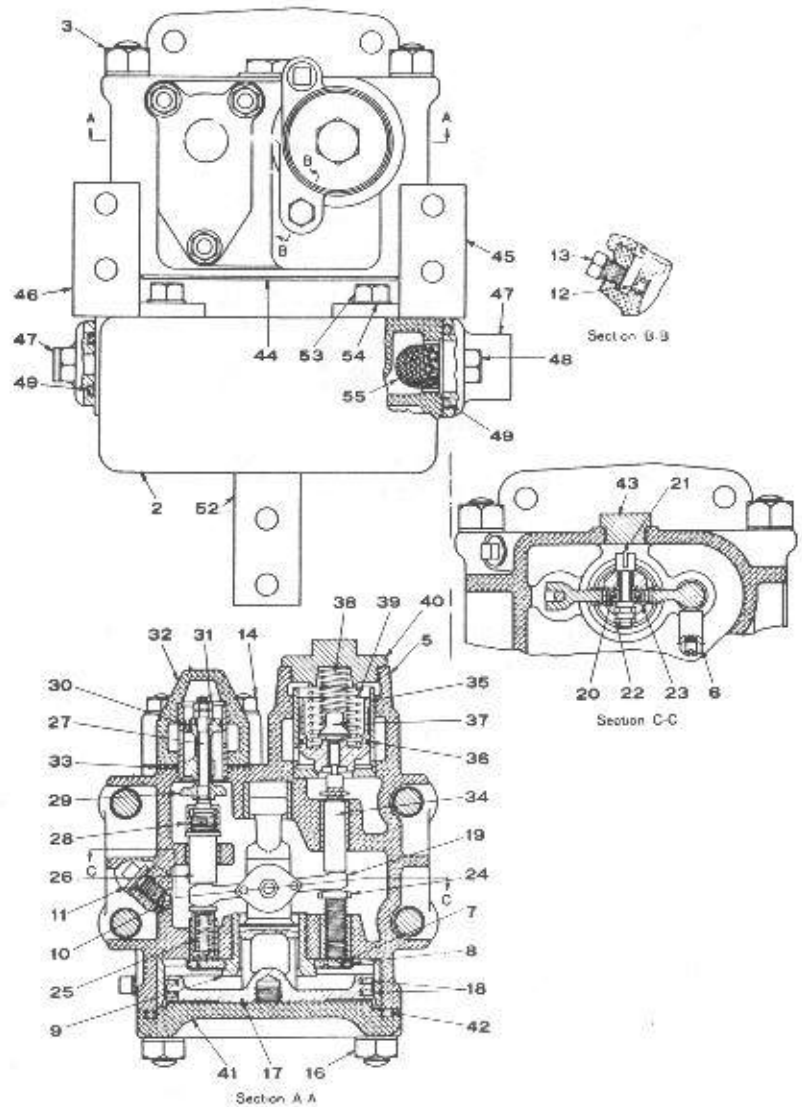

Fig. 14. Assembly View of the Type B-3 Relay Valve

B-3 Relay Valve

The B-3 relay valve relays the application and release operation of the control valve, reproducing in the brake cylinders, the pressure condition established in the displacement reservoir. It has a high capacity air flow which provides fast application and release rates for any combination, number and sizes of brake cylinders.

As shown in Fig. 14, it consists of a body mounted on a reservoir which also serves as a pipe bracket. Mounting brackets 45, 46 and 52 are reversible, permitting either suspension or floor mounting of the valve. Piston 17 contains lever 19 mounted on ball bearing 20, on which the lever rotates when the piston is moved by pressure changes. The left end of the lever 19 pivots on spring 25 and controls the movements of exhaust valve stem 26, and the latter, in turn, those of exhaust valve piston 29 and exhaust valve 27. The right end of the lever 19 pivots on adjusting screw 24 and controls movements of application valve stem 34 and the latter, in turn, those of application valve 37 and application piston 35.

The application valve 37 opens and closes to control small pressure changes, and the application piston 35 controls large pressure changes. Choke 12 serves to provide quick equalization of air pressure on the piston 35, confining the opening resistance to spring 39 which makes the valve quickly responsive to light application pressure exerted by stem 34.

An oil pad 7 is applied to the bottom of the relay piston chamber. Oil plug 11 permits injection of lubricating oil.

As shown on Plate 10 the connections cast on the pipe bracket are as follows:

M.R.—To the supply reservoir pipe 6

S.A.P.—To the control valve pipe 16

B.C.—To the brake cylinder pipe

Ex.—Open

The pipe bracket contains a volume chamber, connected to the face of piston 17, which stabilizes the piston to prevent "pumping" action which might occur with slight pressure variations on a small volume.

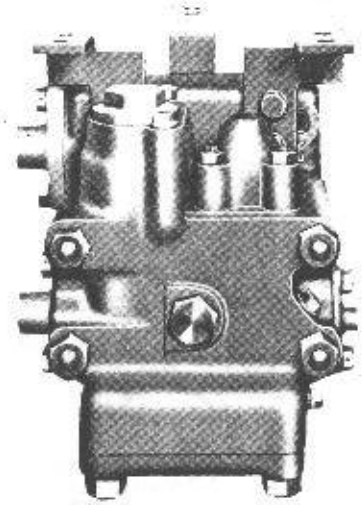

Fig. 15. Exterior View of Type B-3 Relay Valve

F-6 Relay Valve

The F-6 relay valve is used, instead of the B-3 type, on cars having the brake rigging designed to provide the required high braking force for high speed service. It provides the standard maximum braking ratio of 150% for conventional passenger service, but is so designed that available necessary parts can be added to provide governor control of maximum braking pressures for high speed service without any fundamental changes in brake rigging.

The F-6 relay valve consists of Relay Portion 10, Inshot Valve Portion 80, and Magnet Bracket Blanking Plate 4, these portions being bolted to the Pipe Bracket 2, from which they are removable for inspection and cleaning without breaking the pipe connections.

These connections are numbered as indicated by the following figures cast on the pipe bracket:

6—To the supply reservoir pipe.

16—To the control valve pipe 16.

30—To the brake cylinder pipe.

The self-lapping portion is the same as that described for the B-3 relay valve except that a large diaphragm 38 is fitted to the piston, this diaphragm being assembled to the piston by follower 39 and nut 40. The diaphragm is retained between the body casting and diaphragm ring 71 so that the tension of release spring 42 is exerted on the diaphragm. In the diaphragm portion, three diaphragms 68, 64, and 60 of different areas are as-

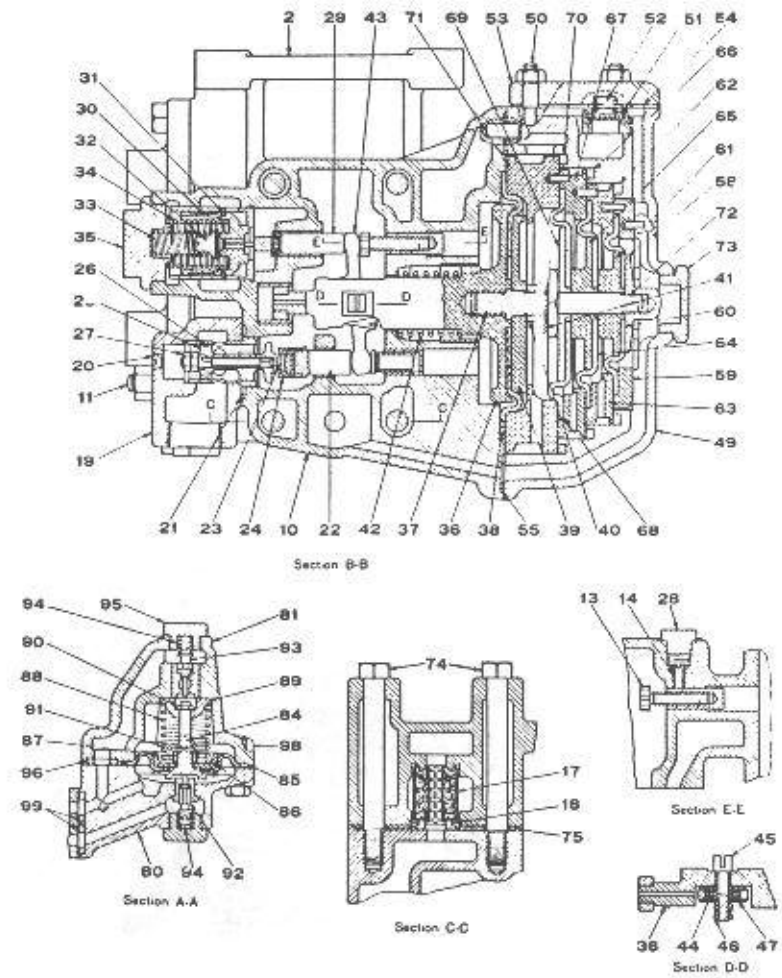

Fig. 16. Assembly Views of the F-6 Relay Valve

sembled on a central bolt between followers 69, 65, 61 and pusher plate 58. These diaphragms have areas of 80%, 60% and 40% in respect to the area of diaphragm 38.

The diaphragms are located centrally in the body between rings 71, 67, 63, and 59, which are doweled to each other so that the diaphragms form a stack in which the central bolt engages nut 40 on the large diaphragm assembly, through which spring 42 exerts its release tension on the complete diaphragm stack. Intermediate and large diaphragm rings 71, 63, and 67 are drilled for port connections to the chambers formed between the diaphragms. There are three check valves 51, weighted by springs 52, and located in the passages to the diaphragm chambers which provide direct release of air from the chambers.

The diaphragm stack as described is arranged to permit speed governor control of braking pressures if the particular car is later used in electro-pneumatic service. The three diaphragms 68, 64, and 60 are thus available for the purpose, but, as used in automatic pneumatic service, only diaphragm 64 is utilized. The area of this diaphragm is 60% of the large diaphragm 38 which operates the self-lapping portion. Therefore, displacement reservoir pressure acting on diaphragm 64 is approximately only 60% effective on diaphragm 38 and the self-lapping portion will operate to reproduce this ratio of brake cylinder pressure. Thus, with a maximum displacement reservoir pressure of 100 pounds the brake cylinder pressure permitted is approximately 60 pounds. Conventional cars have the brake rigging designed for 150% braking ratio at 100 pounds brake cylinder pressure.

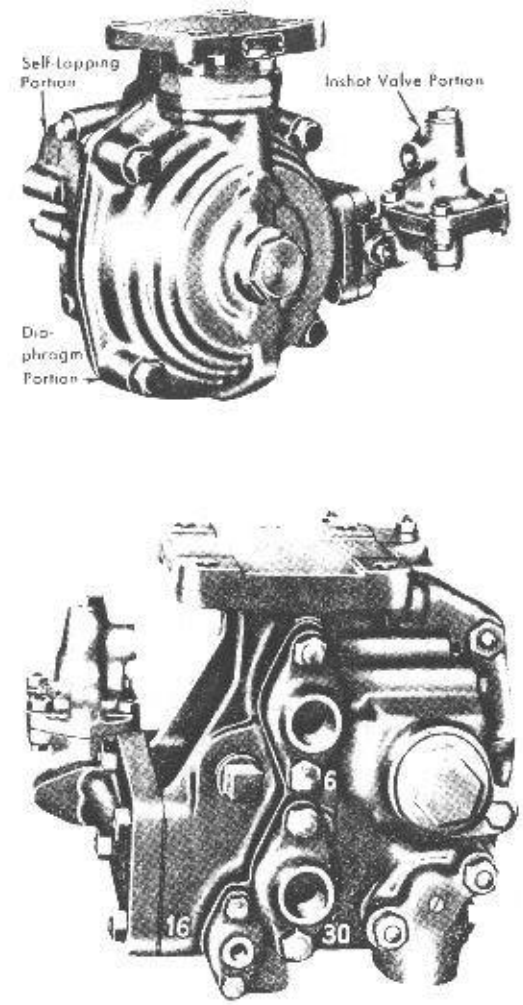

Fig. 17. Exterior Views of the F-6 Relay Valve

New cars, having 250% braking ratio at 100 pounds brake cylinder pressure, are limited by the F-6 relay valve to a maximum of approximately 60 pounds brake cylinder pressure, which is 60% of 250 or 150% braking ratio. This adapts the newer car to harmonious operation in trains with cars having 150% brake rigging.

Spring 42 is used to overcome the resistance of the diaphragm stack and thus insures return of the self-lapping portion to release position and positive release of low brake cylinder pressures. The release force is effective only with application pressure of low value,

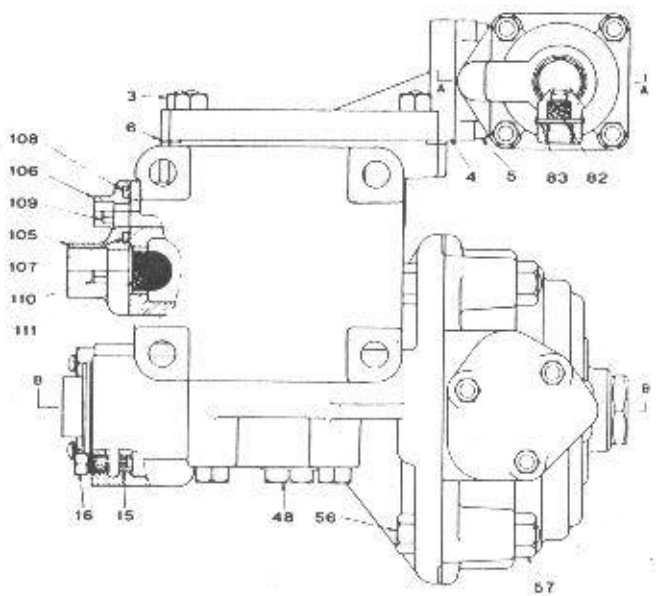

Fig. 18. Outline View of the F-6 Relay Valve

it being nullified for applications exceeding seven pounds in order to provide a ratio of approximately 60% brake cylinder pressure to displacement reservoir pressure for all applications above this value. This is done by the Inshot Valve Portion which, at the start of an application, permits direct flow from the displacement reservoir to all diaphragm chambers until seven pounds build-up is obtained. This pressure overcomes the resistance of the release spring, and operates the self-lapping portion to provide a low brake cylinder pressure, sufficient to overcome brake rigging resistance and apply the shoes to the wheels. The inshot valve portion then cuts-off the direct flow to diaphragm chambers P and N (diaphragms 38 and 68), and diaphragm 64 permits brake cylinder pressure build-up to approximately 60% of displacement reservoir pressure.

The Inshot Valve Portion, Section A-A, Fig. *16* consists of a diaphragm 85, supported between the body and bracket castings, to which is assembled a piston 84 with spring 88. The spring normally holds the piston and diaphragm against the stem of a supply valve 92, which is thus held unseated against the tension of its spring 94, permitting flow of displacement reservoir air to the diaphragm stack. A pressure of seven pounds compresses the spring and deflects the diaphragm sufficiently to permit spring 94 to seat the supply valve, cutting-off the flow to the diaphragm stack. Exhaust valve 93 is normally seated by spring 94. If leakage in the diaphragm stack, or past supply valve 92, should increase the normal, approximate seven pound inshot pressure, the diaphragm 85 will be deflected further, moving piston 84 to engage the stem and unseat the

exhaust valve 93, which will open the diaphragm stack to the strainer protected exhaust 82. After the excess pressure is removed, the diaphragm will return to its cut-off position, retaining the seven pound inshot pressure.

A strainer 17 in the pipe bracket protects the valves, as air from the displacement reservoir passes through it.

The F-6 relay valve can be converted to electro-pneumatic service by substituting the proper magnet bracket for the magnet bracket blanking plate 4. This will incorporate the necessary magnets and ports to utilize the complete diaphragm stack for speed governor control in which the diaphragms regulate braking ratios to 100%, 80%, 60% or 40% at pre-determined speeds. The conduit connection for this control is provided in the F-6 pipe bracket and is opened by removing the plug shown in Fig. 17, lower view.

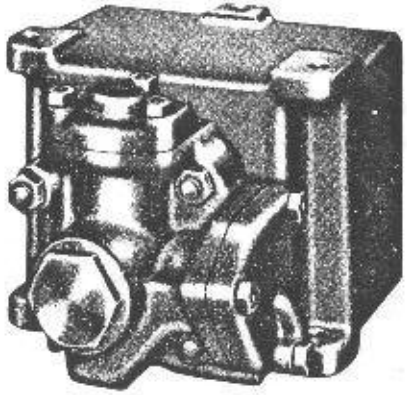

Fig. 19. Exterior View of A-2 Quick Service Valve

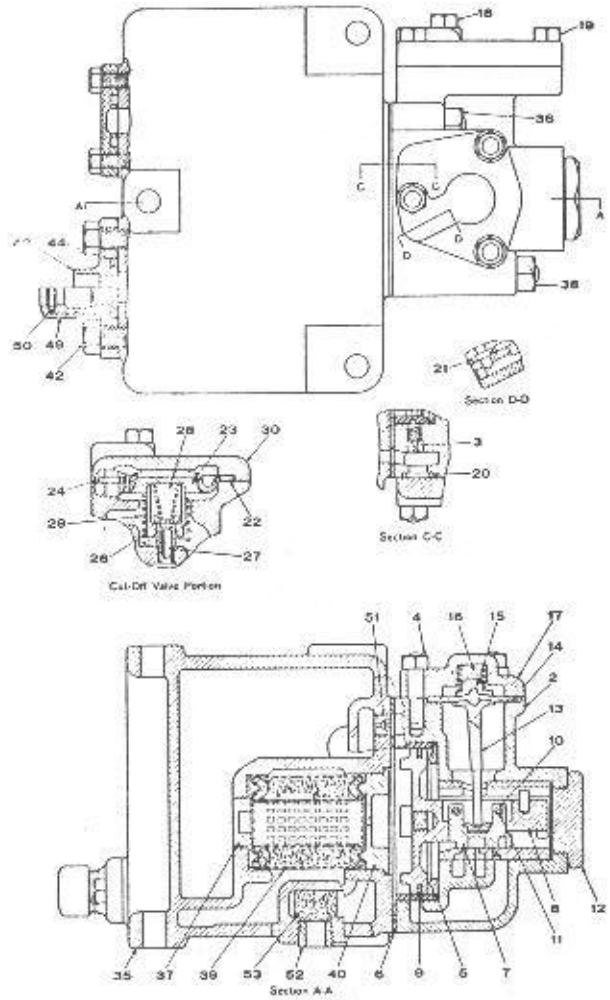

Fig. 20. Assembly View of A-2 Quick Service Valve

A-2 Quick Service Valve

The function of the quick service valve is to propagate local quick service activity from car to car for all service brake pipe reductions and thereby provide fast development of the brake pipe reduction, particularly on successive reductions following the initial brake pipe reduction.

The valve is connected to the brake pipe as shown on Plate 10. It consists of a body 2, Fig. *20*, attached to pipe bracket 35 by studs and nuts 36 and 38. The body can be removed from the pipe bracket for cleaning and repairs without disturbing the pipe bracket or pipe connections.

The pipe bracket contains a quick service volume that is charged from the brake pipe through the strainer 39, which is the same as the strainer used in the "AB" valve and D-22-AR control valve. The exhaust opening is protected from dirt and insects by hair strainer 53, retained in place by plug 52. Choke 51, which provides a controlled rate of brake pipe reduction with the valve in application position, is located in the face of the bracket. Both the choke and the strainer are accessible on removal of the body.

The body contains a piston 8 with packing ring 9. Attached to the piston by two pins 10 and locks 11 is slide valve 7, having two ports which establish connections with three seat ports in accordance with the position of the slide valve as moved by the piston. The slide valve is held to its seat by the tension of spring 16, and brake pipe pressure through a port shown in section D-D, transmitted through diaphragm 14 and strut 13.

Choke 3, section C-C controls the charging rate of the quick service chamber. It is protected by a felt filter. In its release position, Fig. *20*, the piston seals on seal 5 and permits the quick service chamber to charge through choke 3. In its forward or application position, the piston cuts off the charging choke.

The straight air brake pipe connection to this valve is blanked on the pipe bracket by a blanking flange as shown in the upper view, Fig. *20*. The valve, therefore, is quickly convertible to use electric straight air operation merely by removing the blanking flange and connecting the straight air pipe. The cut-off portion then operates to cut-off the continuous quick service valve when the electro-pneumatic straight air brake is applied.

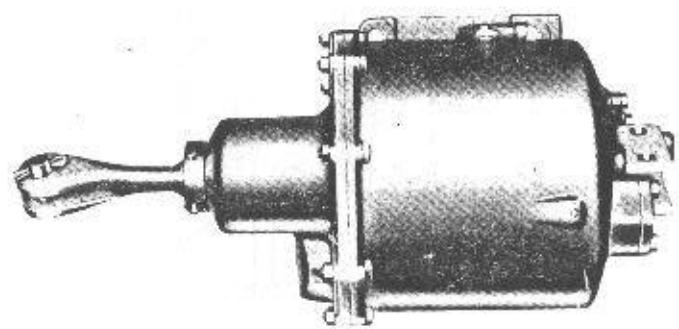

Fig. 21. Type UAHS Brake Cylinder

Type UAHS Brake Cylinders

The brake cylinders are located on the trucks with piston rod 10 so connected through the brake levers and rods to the brake shoes that when the piston is forced outward by air pressure from the supply reservoir the force so developed is transmitted through the rods and levers to the brake shoes, forcing them against the wheels.

The number, size and location of brake cylinders depend on the weight of the car and the particular installation. The "UAHS" type brake cylinder, Fig. 21, is designed to prevent the entrance of dirt, and the construction is such as to permit the lubrication of the cylinder without dis-assembly.

The cylinder body and pressure head are combined into a single casting which is provided with a bolting flange for mounting and a reinforced flanged fitting for the pipe connection. The piston 4 has a hollow rod which provides for a loose push rod that is attached to the levers and rods of the brake rigging, and a push rod holder 39 is attached to the outer end of the piston rod.

A solid WABCO packing cup 5 snaps onto the pressure face of the piston. The circumference (or perimeter) of the piston is machined to form a shoulder over which the packing cup is fitted, and a groove back of this shoulder contains a piston lubricator. The space back of the heel of the packing cup and in front of the lubricator swab provides a groove around the piston which, when filled with lubricant, serves to spread the lubricant over

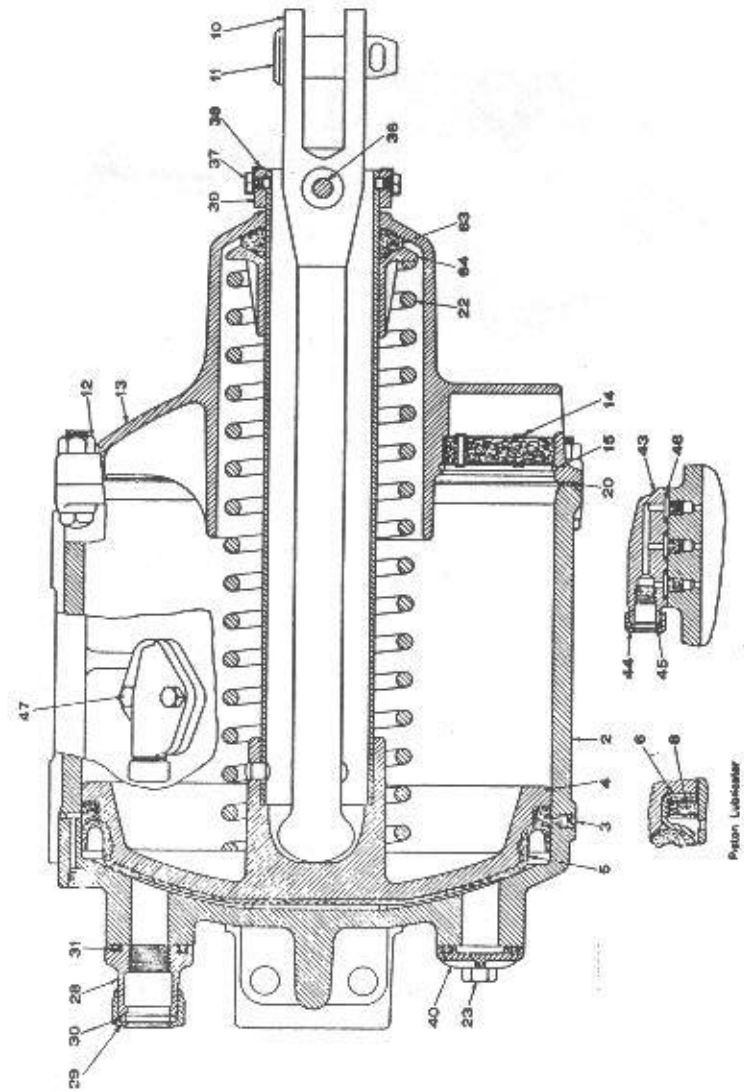

Fig. 21A. UAHS Brake Cylinder Assembly

the cylinder wall with each movement of the piston. With the piston in release position, the grease cavity aligns with four grease ports in the cylinder body which are normally plugged. Lubrication is accomplished from the outside by means of a grease gun at any one of the four connections. The lubricator swab serves a double purpose; prevents overflow from the groove to the non-pressure side of the piston when introducing the lubricant, and, as it becomes saturated with lubricant, results in the cylinder surface being relubricated with each application and release movement of the piston.

To prevent the entrance of dirt, the hollow rod is ground true as to diameter and surface, and the non-pressure head *13* is fitted with an oil saturated felt packing seal ring which serves to lubricate the hollow rod as well as to seal the interior of the cylinder against dirt and moisture. The felt seal ring is installed between tapered surfaces of the non-pressure head and the spring seat and is held firmly against the hollow rod.

A release spring guide, which is an integral part of the non-pressure head, supports the spring and prevents contact with the hollow rod due to vibration.

Since atmospheric air must enter the non-pressure end of the cylinder during the release movement, the non-pressure head is fitted with a curled hair strainer *14*. This strainer is of the cartridge type held in place by a spring retainer ring, and the opening to the atmosphere is designed to protect the strainer from direct contact with flying dirt and water.

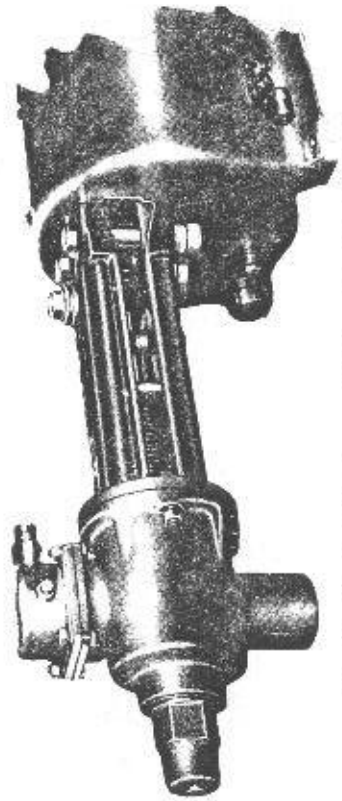

Fig. 22. Brake Cylinder and Automatic Slack Adjuster

Automatic Slack Adjusters

The automatic slack adjuster functions to maintain a predetermined brake cylinder piston travel. The Type "B" for mounting on the pressure head of the brake cylinder is generally used with this equipment, one for each brake cylinder as shown on Plate 10.

Referring to Fig. 23, the slack adjuster body contains a movable crosshead 4 which serves as a fulcrum for the brake rigging cylinder lever. Movement is imparted to the crosshead through adjuster screw 5, combined with ratchet nut 8, and pawl 26, the pawl being operated by piston 23 and spring 31.

The brake cylinder piston and packing cup act as a valve to control the admission and release of brake cylinder pressure to and from the pipe connecting the slack adjuster to the brake cylinder. The port in the brake cylinder to which this pipe is connected is so located that the packing cup uncovers it when the predetermined piston travel is exceeded. Whenever this port is so uncovered, brake cylinder air flows through the pipe into the slack adjuster cylinder where piston 23 is forced outward, compressing spring 31.

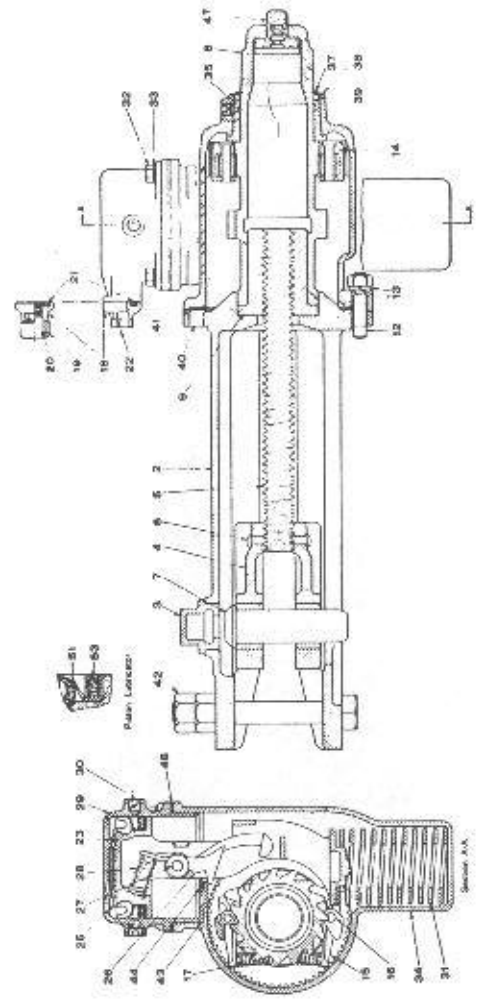

Fig. 23. B-16-D-1 Automatic Slack Adjuster

Attached to the piston stem is a pawl 26 extending into casing 34, which engages ratchet nut 8, mounted within casing 34 upon adjuster screw 5.

When the brake is released and the brake cylinder piston returns to its normal position, the air pressure in the slack adjuster cylinder escapes to atmosphere through the pipe and the non-pressure head of the brake cylinder, thus permitting spring 31 to force the piston to its normal position. In so doing, pawl 26 turns the ratchet nut upon screw 5 and thereby draws the cylinder lever slightly in the direction of the slack adjuster cylinder, thus shortening the brake cylinder piston travel and forcing the brake shoes nearer the wheels. As the pawl is drawn back to its normal position, a lug on the lever side strikes pawl stop 43, on the cylinder, thus raising the outer end of the pawl, disengaging it from the ratchet nut and permitting the screw to be turned by hand if desired.

Check pawls 15 (mounted on floating ring 14) provide against movement of the ratchet nut due to vibration, the end of one of the two levers being held in contact with a tooth in the slack adjuster casing by spring 17. A trip is provided to disengage the holding lever when making hand adjustment in either direction, a pull of sufficient force being required that, while unlocking is accomplished without undue effort, there is enough movement required and adequate resistance to insure against false movement due to vibration.

A separate pamphlet No. 5041-1, contains a complete description and maintenance instructions for the Types *A*, *B* and *C* slack adjusters. A copy will be supplied upon request to our nearest district office.

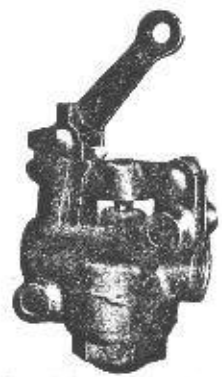

Fig. 24. Exterior View of the B-3-B Emergency-brake (Conductor's) Valve

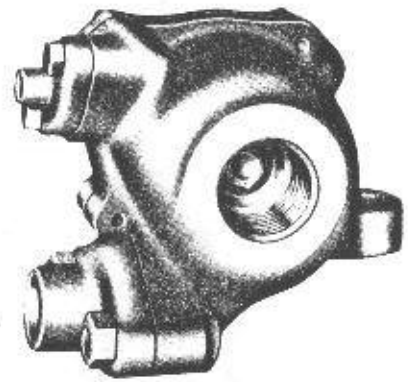

Fig. 25. Exterior View of the E-3 Application Valve

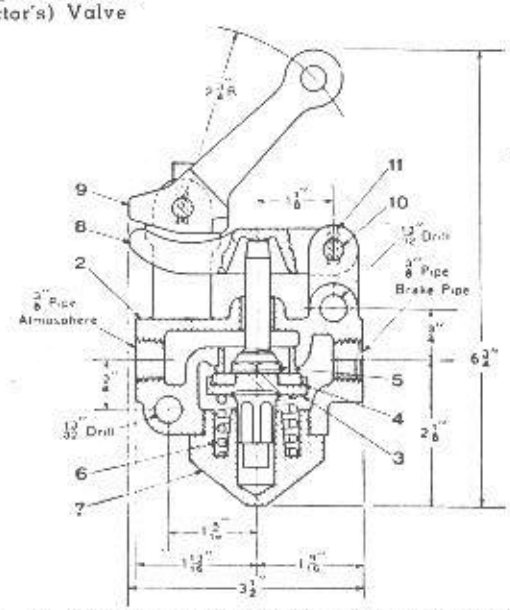

Fig. 26. B-3-B Emergency-brake (Conductor's) Valve Assembly View

B-3-B Emergency-brake (Conductor's) Valve

E-3 Brake Application Valve

These devices are used to permit the conductor to obtain an emergency brake application.

The B-3-B Emergency-brake (Conductor's) Valve, Fig. 26, with a cord attached is located at the end of a brake pipe branch pipe on each end of the car. As shown in Plate 10, its brake pipe opening is connected to the side connection of the E-3 brake application valve. The E-3 brake application valve, Fig. 27, is connected to the brake pipe so that, normally, brake pipe air flows beneath the outer area of piston valve 3, thence through the small port in this valve to the spring chamber, thence out the side connection to the emergency-brake valve. With air pressures equal on both faces of the valve 3, the force of spring 5 holds the valve seated, sealing the atmospheric opening below seat 6.

When the handle of the emergency-brake valve is pulled by means of the cord or otherwise, the handle lever unseats valve 3 and permits the air to escape from the emergency-brake valve pipe faster than it is supplied through the port in the piston valve 3 of the E-3 brake application valve. Consequently, the pressure above the piston valve is quickly reduced and the greater brake pipe pressure on its outer area unseats the valve and makes a large direct opening from the brake pipe to the atmosphere, which permits brake pipe air to escape at an emergency reduction rate and causes emergency brake application of the control valves as described under "Emergency."

The emergency-brake valve should be used only in case of actual danger, and then should be left open until the train stops.

The piston valve 3 of the brake application valve Fig. 27, is fitted with packing ring 4, felt swab 18, which is supported by expander 19, felt oil retainer 17, which is sewed in the piston recess, felt strainer 20 and strainer plate 21. The swab and oil retainer keep the cylinder wall well lubricated while the strainer prevents passage of dirt and clogging of the choke in the piston. These measures are designed to prevent accumulation of dirt on the piston and to keep the piston valve free in its cylinder so that it positively opens and closes when the emergency-brake valve is operated.

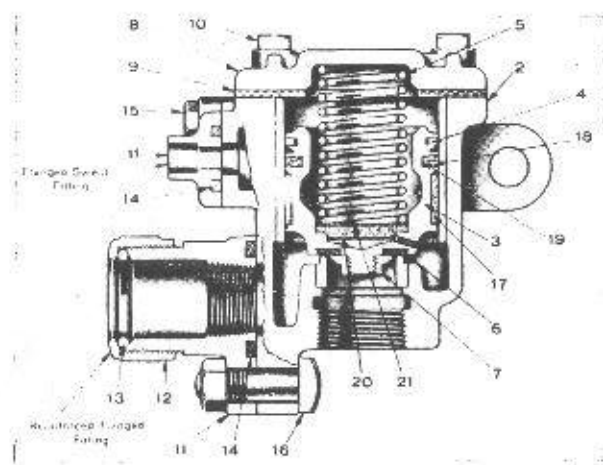

Fig. 27. E-3 Brake Application Valve—Assembly View

Branch Pipe Tee

Four Branch Pipe Tees are used, one each in the brake pipe branches to the emergency-brake (conductor's) valves and one each in the brake pipe branches to the control valve and quick service valve.

The purpose of the *Branch Pipe Tee* is to prevent moisture that may be deposited in the brake pipe, from any cause, draining into the branch pipe connection and from thence into the valves.

This fitting has the interior coring so designed that the outlet from the brake pipe to the branch pipe is at the top. Thus, as air passes through the brake pipe, it flows upward into a chamber and thence through the pipe opening at the side to the branch pipe, the moisture and heavy particles of dirt passing on through the brake pipe.

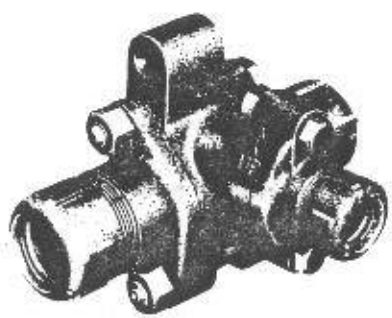

Fig. 28. Exterior View of the Branch Pipe Tee

Pressure Retaining Valve

The pressure retaining valve is piped to the control valve exhaust as shown on Plate 10, and is used for the purpose of releasing brake cylinder pressure at a slow rate during the time required for recharging when descending heavy grades.

The cock key 6 has three outlets, to the atmosphere through the pipe tap marked "exhaust," to test gage and to cavity d leading to valve 4.

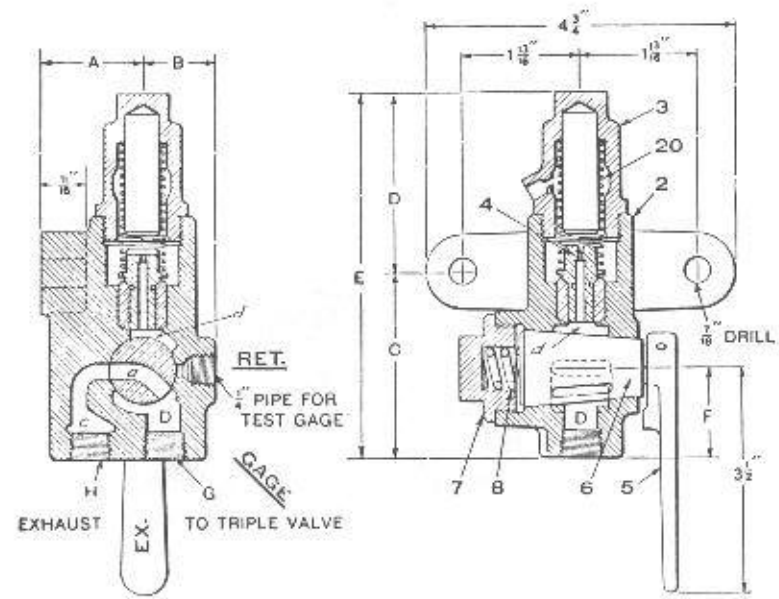

Fig. 29. Pressure Retaining Valve

A wasp excluder is used in the exhaust port to prevent the entrance of insects.

When the handle of the retaining valve is turned down, passage *a* in the cock key connects chamber *D* to the outlet port *e*. Consequently, when turned down, the control valve exhaust is open through the retaining valve pipe, chamber *D*, passage *a* and exhaust port *e* to the atmosphere. When the handle is turned up to the horizontal position, passage *a* connects chamber *D* below the cock key with chamber *d*, so that when a release is made the air exhausting from the brake cylinder flows to the retaining valve and through passage *a* and passage *d* to the face of the valve 4, which it must lift against the pressure of spring 20 in order to flow to the atmosphere through the vent port in the cap nut. As long as the pressure of the air from the brake cylinder is greater than 10 pounds, valve 4 is unseated and the air exhausts to the atmosphere through the vent port which, being small, makes the release of the brake much slower than when the retaining valve is not set up. When the pressure has been reduced to 10 pounds it is no longer able to hold valve 4 off its seat and the valve then closes and the remaining 10 pounds is exhausted through the small choke in valve 4 to the vent in the cap nut. The purpose of the choke in valve 4 is to prolong the final release and therefore the available recharge time, or allow a complete release if necessitated by grade conditions, without the delay involved in turning down the retaining valve on each car throughout the train.

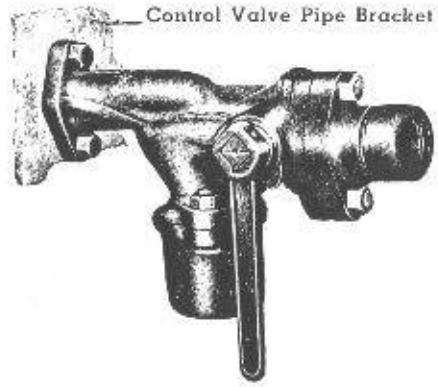

Exterior View

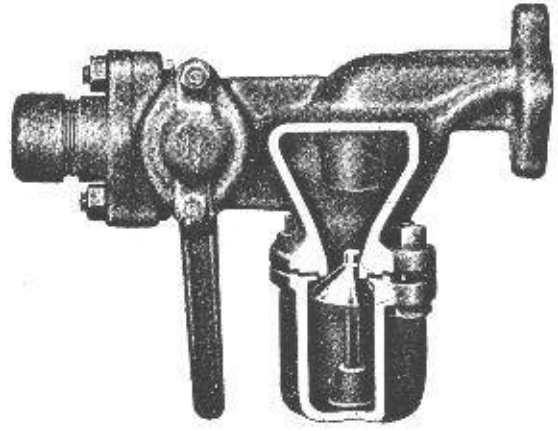

Sectioned View showing the Dirt Collector Portion

Fig. 30. Combined Dirt Collector and Cut-out Cock with Reinforced Flanged Union Fitting

Combined Dirt Collector and Cut-out Cock

This device is a combination of two of the branch pipe fittings—the centrifugal dirt collector which protects the control valve against entrance of dirt, and the cut-out cock which opens (handle vertical) or closes (handle horizontal) communication between the control valve and the brake pipe. Bolting flanges are provided for both pipe connections, the flange on the dirt collector end bolting direct to the control valve pipe bracket while the flange on the cock end is provided with a reinforced flanged union fitting.

The dirt collector is the standard check valve type with the detachable dirt chamber. It is only necessary to remove two nuts to drop the dirt chamber for cleaning.

The purpose of the umbrella shaped check valve is to hold in the dirt chamber the collected dirt under all conditions of air brake operation. The body portion has a machined seat against which the check valve seats when a heavy reduction in pressure occurs above it, such as that during an emergency application, thereby shutting off communication between the dirt chamber and the dirt collector outlet. The check valve is so designed and placed on the valve stem as to permit of a rocking motion whereby any fine dust which may collect on top of the check valve will be shaken off into the dirt chamber

Double Locking Angle Cock

Fig. 31 illustrates the angle cock, one of which is installed at each end of the brake pipe. The cock is open with the handle parallel to the pipe line, as illustrated and closed with the handle crosswise or at right angles to the pipe line.

This Angle Cock Handle has a double lock that prevents accidental movement of the handle and discourages unauthorized tampering.

A latch, hinged in the handle, must be depressed before the handle can be raised to unlock and turn the cock key. As this requires two distinct and opposite forces, which can only be coordinated manually, the cock is safe against accidental opening from a single force such as that applied by the foot or by a swinging chain.

A spring holds the latch in engagement with the socket, locking the socket and handle together so that the handle cannot be raised to clear the stop lugs on the body. To turn the cock it is necessary to depress the latch while lifting the handle. This is done by gripping the handle in a normal manner and applying light thumb pressure on the latch.

While serving as a lock, the spring also acts to maintain a positive contact between locking surfaces, thus avoiding loose movements and resultant wear.

The handle may be removed independently of the socket. After driving out the hinge pin, the handle may be easily removed by first depressing it and then sliding it forward to permit the web to clear the socket lugs.

A split type socket is used and the rivet pin hole for locking the socket to the key is drilled through the split portion, engaging a notched-out cavity in the square of the key.

An extension with a U bolt groove to the brake pipe end of the angle cock serves to support the brake pipe entering the angle cock while the groove in the extension permits the angle cock to be positively attached to the hanger bracket.

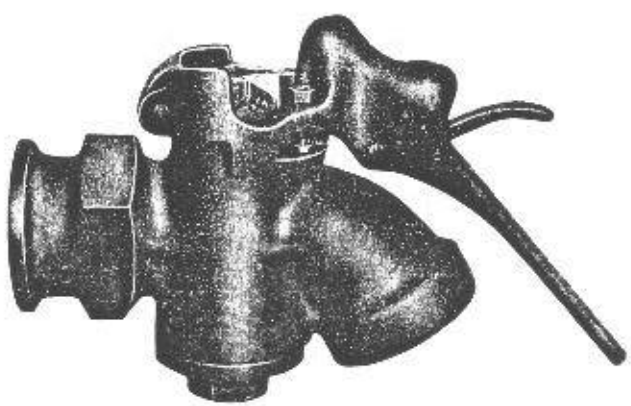

Fig. 31. View showing Angle Cock Features

Brake Cylinder Cut-out Cocks

A vented cut-out cock with locking handle is located in the brake cylinder pipe to each truck, as shown on the piping diagram of the equipment. This cock is open with the handle in crosswise position, as shown by Fig. 32. In closed position, brake cylinder air is vented through a 3/8" pipe tap in the side of the cock body.

The handle locks in both open and closed positions. When so locked, it is necessary to pinch the two arms of the handle together to change the position. Flanged fittings permit convenient removal and re-application of the cock.

Fig. 32. Cut-out Cock with Locking Handle

Reinforced Flanged Fittings

The purpose of the reinforced flanged fittings is to produce pipe joints which can be made and maintained permanently air tight and at the same time avoid costly failures in road service due to the breakage of pipe or fittings. The fitting is designed to clamp the pipe back of the threaded end so as to relieve the thread of tension stresses, and it is arranged so that removals and reapplications can be conveniently made.

Unless these fittings are correctly installed, the protection against pipe failures at the point of the exposed threads may be lost. To fully accomplish the purpose of these fittings, the piping assembly should be made up as follows:

After slipping the clamping nut and anchor ring over the threaded end of the pipe, the body of the fitting must be screwed on the pipe so as to make a rigid and air tight

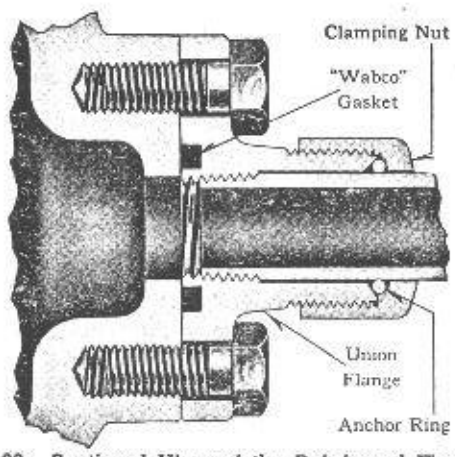

Fig. 33. Sectional View of the Reinforced Flanged Straight Fitting Connection

joint at the threads when the bolt holes are in line with the tapped holes in the face to which it will be bolted. The anchor ring and clamping nut must then be moved into place and the nut firmly tightened so as to solidly close the anchor ring on the pipe.

To insure that the anchor ring will have a full supporting bearing on the pipe, the thread must be straight, that is, cut substantially parallel with the axis of the pipe. This will automatically occur if the pipe threading tools are in proper condition.

The pipe must be so formed and fitted that when it is in place the face of the body fitting, with the gasket removed, will contact squarely with the surface to which it will be clamped, and that the bolt holes are in line to permit application of the cap screws without springing the pipe. The gasket can then be applied and the fitting clamped in place with the cap screws which should be solidly tightened.

The design of the pipe runs between clamping points must be such that the pipe can have sufficient flexibility in itself to take up any small deflections that may be caused by movements in the car body. This flexibility is best secured by designing the pipe run to have one or more easy bends of not less than six inch radius. Where the form of the pipe and the installation of the flanged union is made as described, there will be adequate mechanical strength in the fitting assembly to cause the pipes to deflect sufficiently to compensate for normal maximum car body movements without the production of excessive stresses within the fittings.

Hose Connections

Hose Connections make the brake pipe continuous throughout the train. When cars are being separated, as in switching, the hose should be uncoupled by hand, to prevent rupture or damage.

Flexible semi-metallic armored hose connections are used for brake cylinder connections from car body to trucks and for drawbar connections where car construction requires.

Fig. 34. Hose Connection

Fig. 35. Flexible Semi-Metallic Armored Hose

Dummy Couplings are provided at each end of the car to which the hose couplings should be attached when not coupled up, to protect against injury to the hose couplings or dirt entering the pipes.

OPERATION OF THE EQUIPMENT

As it is impossible to show all the ports and connecting passageways by any single section taken through the control valve, Plates 1 to 9 inclusive have been made to show in a purely diagrammatic way the relation of the various ports to each other, for the different operating positions. The actual proportions and mechanical construction of the parts have been disregarded, where necessary, in order to make the connections and operation more easily understood.

Initial Charging Position—Plate 1

Brake pipe air passes through the branch pipe cut-out cock and dirt collector into passage *1* and thence through filter element 12 to chambers *A* and *B* on the faces of service piston 93 and emergency piston 35. Brake pipe air also flows to passage *1b*, thence to the spring side of quick action vent valve 40, and through passage *1g* to the top of accelerated release check valve 52a.

If the rate of brake pipe pressure rise in chamber A on the face of the service piston is comparatively rapid, as during initial charging, the piston and attached slide valve 98 are moved to their innermost position, compressing return spring 108 and moving return spring cage 107 to the right. In this position the slide valve blanks the brake pipe seat port *d1* to avoid blowing the graduating valve 99 off its seat during initial charging.

With the piston in this position the piston head uncovers charging choke 83 and the charging ports X in the piston bushing. Brake pipe air in chamber A charges the auxiliary reservoir through:

(a) Choke 83 to service slide valve chamber C, thence through passage *5g*, release slide valve chamber D and passage *5* to the auxiliary reservoir.

(b) Charging ports X, passage *5f*, choke 81, past check valve 73, passage *5g*, release slide valve chamber D and passage *5* to the auxiliary reservoir. Check valve 73 permits charging in this direction but is seated by spring 89 to prevent back flow from the auxiliary reservoir when the latter pressure in passage *5g* is higher than brake pipe pressure in passage *5f*.

The service slide valve chamber C and the release slide valve chamber D are connected by passage *5g* so that auxiliary reservoir pressure is the same in both chambers at all times. Auxiliary reservoir pressure in chamber C is also connected to the spring side (Chamber K) of release piston 110, through port *a* in service slide valve 98 and passage *a1*. With air pressure acting on release piston 110 balanced, spring 116 moves the piston and attached slide valve 112 to release position, where cavity Q in the slide valve connects displacement reservoir passage 3 to exhaust passage 10.

Passage *16a* leading to the relay valve is connected through passage W in the blanking pad 15 to passages *3a* and *3*, and the displacement reservoir. As the latter is open to the release slide valve exhaust 10 the relay valve is in release position, connecting the brake cylinders to atmosphere.

The emergency reservoir is charged simultaneously with the auxiliary reservoir from release slide valve chamber D, through passage *2c* at the right end of the release slide valve 112, passage *2f*, past ball check valve 195 and flat check valve 73c, passages *2k* and *2a* and pipe *2* to the emergency reservoir. Spring 89c is overcome and check valves 195 and 73c are unseated, permitting this charging flow as long as auxiliary reservoir pressure is higher than emergency reservoir pressure, but when the emergency reservoir pressure is higher it seats the check valves and prevents back flow from the emergency to the auxiliary reservoir.

The supply reservoirs are charged from two sources:

(a) From auxiliary reservoir through the release slide valve chamber D, port *r* in the release slide valve, passage *r1* in the seat, past ball check valve 74 and flat check valve 87 to passage *6* and the supply reservoirs. Spring 84 is overcome and check valves 74 and 87 are unseated, permitting this charging flow as long as auxiliary reservoir pressure is higher than supply reservoir pressure, but when supply reservoir pressure is higher it seats the check valves and prevents back flow from supply reservoirs to auxiliary reservoir.

(b) From brake pipe air in chamber A on the face of the service piston, through passages *1c* and *1d*, cavity in the limiting valve slide valve 136, passages *1k* and *1f*, past ball check valve 74a and flat check valve 73a to the chamber above flat check valve 87, where the flow combines with the charging flow from auxiliary reservoir through passage *r1*, thence to the supply reservoirs through passage 6. Spring 89a is overcome and check

valves 74a and 73a are unseated, permitting this charging flow as long as brake pipe pressure exceeds supply reservoir pressure, but when supply reservoir pressure becomes higher it seats the check valves and prevents back flow from supply reservoirs to brake pipe.

Thus the auxiliary, emergency, and supply reservoirs are charged simultaneously on each car to the existing brake pipe pressure.

Brake pipe air from passage *1k* lifts ball check valve 74b and flat check valve 73b and flows through passage *d2*, choke 14, and passage *d1* to the service slide valve seat, where it is blanked.

The outer face of release interlock diaphragm 180 is connected through passages *3k*, *3b* and *3*, cavity *Q* in the release slide valve 112 and passage *10* to the exhaust. Therefore, interlock slide valve 183 is in its left hand position where cavity *y* connects auxiliary reservoir air from passage *5d* to passage *b1*, and emergency reservoir passage *2d* is blanked, thus providing for graduated release operation as later described.

Passage *16* is connected to the quick service limiting valve diaphragm 71. As previously explained, passage *16* is open to the release slide valve exhaust, and with no pressure on the face of the quick service limiting valve diaphragm, spring 140 holds the quick service limiting valve slide valve 136 in release position, where its cavity connects passages *1d* and *1k*, through which the supply reservoirs are charged from brake pipe passage *1c*.

Brake pipe air from passage *1c*, and auxiliary reservoir air from passages *5c* and *g1* flow to the release

insuring valve to provide the release insuring feature as later described.

In the *emergency portion*, brake pipe air in chamber *B* on the face of emergency piston 35 flows through the charging choke 27 to chamber *E* on the slide valve side of the piston and through passage 4 to the quick action chamber.

If the rate of brake pipe pressure rise in chamber B on the face of the emergency piston is comparatively rapid, as during initial charging, the emergency piston 35 and attached slide valve 29 are moved to their innermost position, compressing spring 63 and moving return spring cage 62 to the left. In this position cavity S connects passages *3g*, *3f* and *s1*. As passage *3f* is connected through passages *3h*, *3c*, and *3* to the displacement reservoir, which is open to atmosphere through the release slide valve exhaust, spring 53 and brake pipe air from passage *1g* will hold check valve 52a seated. Also, the safety valve is connected to the displacement reservoir through passage *s1*, slide valve cavity S and passage *3f*.

Emergency reservoir air is connected to the underside of the emergency slide valve 29 by passages *2* and *2g*. In order to prevent the slide valve 29 being unseated when the quick action chamber is not charged, the slide valve is balanced by spring 55 and strut 34. Emergency reservoir air is connected to a small diaphragm area on the upper side of the cover gasket through passage *2g* and port *2h*, and exerts downward pressure through strut 34 to keep the slide valve seated when there is no air pressure above the slide valve. When the quick

action chamber is charged, the pressure in the emergency slide valve chamber holds the slide valve to its seat and the pressure on both sides of the diaphragm area of the cover gasket is the same; consequently, the stem is balanced, removing downward strut pressure except that of the light spring 55 which does not increase slide valve friction materially.

Emergency reservoir air is connected through passages *2* and *2g* to the spring chamber above the spillover check valves, ball check 51 and flat check valve 52. The underside of ball check valve 51 is connected by a choked passage to the emergency slide valve chamber *E* and the quick action chamber.

On cars located on the head end of a long train, improper use of release position of the brake valve might cause overcharge of the quick action chambers.

When quick action chamber pressure becomes a small amount higher than emergency reservoir pressure, as determined by the check valve spring 54, ball check 51 and the spring loaded check valve 52 will be unseated, permitting the overcharge in the quick action chamber to flow to the emergency reservoirs and thus prevent emergency application through undesired operation of the emergency portion upon return of the brake valve handle from release to running position. The use of the spring loaded check valve 52 and ball check 51 provides double protection against the quick action chamber charging from the emergency reservoir.

Emergency reservoir air from passage *2* is connected to the outer area of the face of high pressure valve 44. In release position of the emergency slide valve, emergency reservoir air from passage *2g* is connected by means of cavity *h* in the slide valve to the spring side of the high pressure valve through passage *h1*; therefore, spring force will move the valve to its seat and hold it closed.

As shown in Fig. 36 chamber "B" on the face of the B-3 relay valve piston 17 is connected to the displacement reservoir and the application piston 35 to the

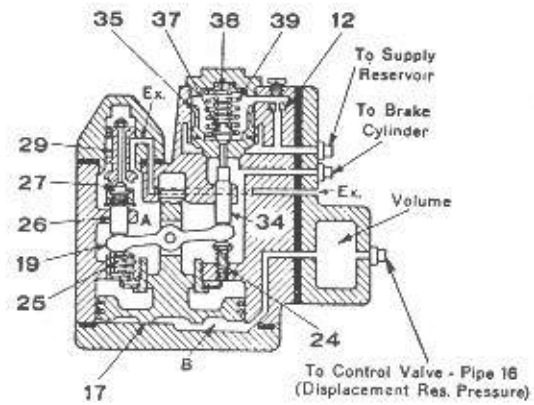

Fig. 36. Type B-3 Relay Valve—Release Position

supply reservoir. Supply reservoir air flows through choke 12 to the spring chamber, back of the application piston 35, balancing the pressure on both faces of the application piston. With brakes released, there is no pressure in the displacement reservoir and chamber B on the face of the relay piston 17; therefore, the piston is in release position, springs 38 and 39 hold the application valve and piston seated, and exhaust valve 27

and piston 29 are in their lower position, opening chamber A and the brake cylinders to exhaust passage Ex.

At the F-6 relay valve, Plate 9, the diaphragm chambers P, N, K, and A are open to the displacement reservoir through passages *16*, *17*, *18*, and *19*. These chambers, therefore, are exhausted and release spring 42 holds the diaphragm stack in release position. The self-lapping portion assumes release position as described for the B-3 relay valve, releasing brake cylinder air.

At the quick service valve, Fig. 37, brake pipe air flows through strainer *39* to piston chamber A, moving the piston 8 and attached slide valve 7 to its inner position on its seal. This piston movement uncovers

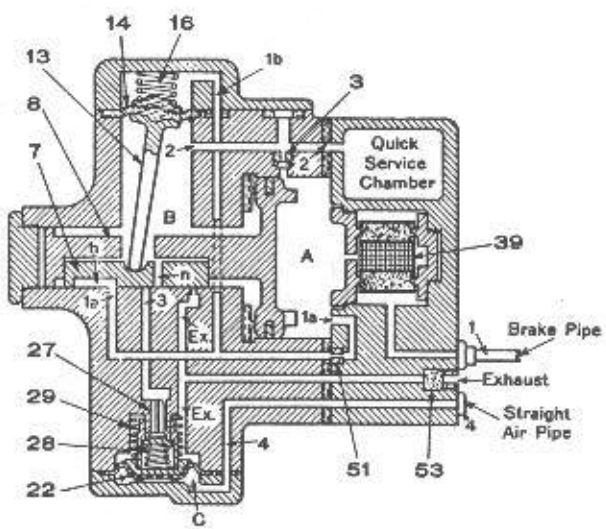

Fig. 37. Quick Service Valve Charging and Release Position

choke 3, through which brake pipe air charges through passage *2* to the quick service chamber and slide valve chamber B. Owing to the restricted charging rate through choke 3 and the volume of the quick service chamber, chamber B will charge somewhat more slowly than chamber A, the greater pressure in the latter meanwhile holding the piston in release position. As the quick service chamber and chamber B become charged to brake pipe pressure, the air pressures on the piston become balanced and the piston remains in release position of its own inertia. Thereafter, as long as the brakes are released, any small fluctuations in brake pipe pressure will equalize with quick service chamber pressure and maintain the piston and slide valve in release position.

In release position no connections are made by the slide valve except brake pipe air from passage *1a* is present in slide valve cavity *h*.

Release Position—Fully Charged—Plate 2

The service piston 93, slide valve 98 and graduating valve 99 remain in their innermost position, as described under Initial Charging, until pressure in the auxiliary, emergency and supply reservoirs and chamber C is nearly equal to brake pipe pressure on the face of the piston. Return spring 108 then moves the spring cage 107, piston 93, slide valve 98 and graduating valve back to normal Release Position as shown on Plate 2 where the charging connections remain established as described for Initial Charging, and port *d* in the slide valve registers with seat port *d1*, connecting brake pipe air to the face of the graduating valve seat.

In the *emergency portion*, after quick action chamber and brake pipe pressures become nearly equal, spring 63 returns cage 62 to its right hand position, moving the piston, slide valve and graduating valve to Release position as shown on Plate 2. In this position the port connections remain established as described for Initial Charging, except that slide valve cavity S cuts off connection between passages *3g* and *3f*.

The reservoirs continue to charge, as described under Initial Charging, until completely charged, after which check valves 74, 87, 74a, 73a, 195 and 73c are closed by their springs and all the parts remain in release position as shown on Plate 2.

Preliminary Quick Service Position—Plate 3

When a service rate of brake pipe reduction is made to apply the brakes, the air in chamber A on the face of the service piston is reduced. Check valve 73 prevents back flow from auxiliary reservoir to brake pipe. When the pressure in chamber A is thus reduced a predetermined amount below that in chamber C, the higher pressure moves the piston to the left until the spring guide 96 at the end of the piston engages the end of the slide valve. The guide is moved lightly to the right, compressing the service piston spring 95. This movement is sufficient for the piston head to clear the charging choke 83 and ports X in the cylinder, thus cutting off brake pipe air in chamber A from auxiliary reservoir air in chamber C. The service piston spring provides a predetermined resistance to movement beyond

this position until sufficient excess of auxiliary reservoir pressure over brake pipe pressure is developed to overcome the spring and move the piston and graduating valve to preliminary quick service position. The spring therefore, stabilizes the service piston and prevents undesired quick service application which otherwise might develop from moderate fluctuations in brake pipe pressure.

As the brake pipe pressure reduction continues, sufficient differential is created to compress the piston spring and move the piston and graduating valve on the slide valve, this movement being limited by the greater resistance offered by the slide valve. This is Preliminary Quick Service position in which cavity *k* in the graduating valve connects slide valve ports *c* and *d*. Seat port *d1*, containing brake pipe air, registers with slide valve port *d*. Slide valve port *c* leads to the quick service volume (Q. S. Vol.). Brake pipe air, therefore, flows through passages *1c* and *1d*, cavity in limiting valve slide valve 136, passage *1k*, past check valves 74b and 73b to passage *d2*, through choke 14, passage *d1*, slide valve port *d*, graduating valve cavity *k* and port *c* in the slide valve to the Q. S. Vol., thereby producing a local quick reduction in brake pipe pressure, controlled to a predetermined rate by quick service choke 14 in passage *d1*. This preliminary local reduction of brake pipe pressure, controlled by the graduating valve, is transmitted from car to car by adjacent control valves and quick service valves, which results in rapid serial quick service operation throughout the train.

Second Stage Quick Service

The quick service volume (Q. S. Vol.) is permanently connected to atmosphere through choke 82 and by this means local brake pipe reduction is continued until the slide valve moves. After the quick service volume has been cut off by the movement of the slide valve, remaining air pressure in this volume is exhausted through choke 82.

In Preliminary Quick Service position the service graduating valve 99 uncovers the service port *f* in the slide valve but as this port is blanked on the slide valve seat no air flow takes place in this position. Also, slide valve port *a* is blanked by cavity *m* in the graduating valve, cutting off port *a* from chamber C. However, auxiliary reservoir pressure in passage *a1* and chamber *K* of the release piston is retained equal to auxiliary reservoir pressure in chamber D. Therefore, with auxiliary reservoir air on both sides of the release piston 110, spring 116 continues to hold the release piston and slide valve 112 in release position until the service slide valve moves to service position. By this means the displacement reservoir passage *3* is positively held open to exhaust passage *10*, thus holding the brake released until a predetermined brake pipe reduction develops sufficient differential to move the service slide valve to service position. This stabilizes the service action and avoids undesired application from brake pipe pressure fluctuations.

During preliminary quick service, the emergency piston 35 and graduating valve 30 assume service position as described under "Service Position."

Continuous Quick Service

The initial reduction in brake pipe pressure, immediately is effective at the quick service valve, Fig. 38,

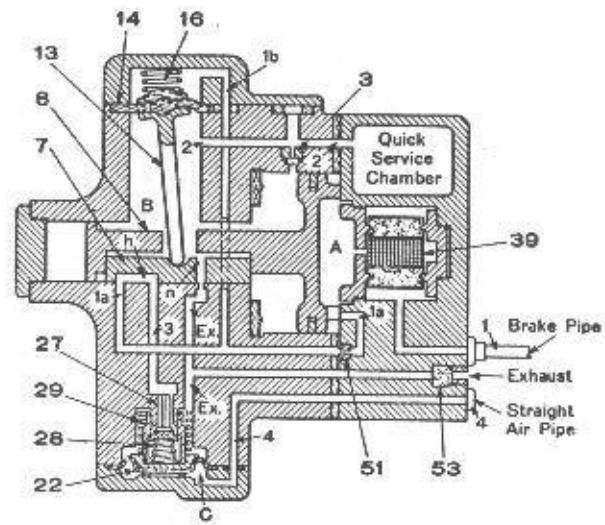

Fig. 38. Quick Service Valve—Application Position

closest to the point of origin of the brake pipe reduction. At this valve, chamber A pressure is reduced at a rate that permits the quick service chamber and connected slide valve chamber B to retain a higher pressure, owing to the restricted flow through choke 3 and chamber A. When chamber B pressure thus becomes approximately a half pound higher than chamber A pressure, it moves the piston and slide valve to the right, the lugs on the piston head engaging the pipe bracket face and limiting the movement.

This is application position in which the piston head cuts off choke *3*, closing connection between piston chamber A and the quick service chamber; slide valve cavity *h* connects seat ports *3* and *1a* and slide valve port *n* connects slide valve chamber B and the quick service chamber to the Exhaust passage Ex.

Brake pipe air thus flows through the strainer to chamber A, thence through passage *1a*, choke 51, slide valve cavity *h*, passage *3* and past cut-off valve 27 to the exhaust. Meanwhile, quick service chamber air is also reduced through slide valve port *n*, the rate being controlled by a choke in the slide valve seat exhaust passage. Owing to its small volume, the quick service chamber pressure is reduced rapidly so that it quickly becomes less than brake pipe pressure in chamber A. When chamber A pressure thus becomes approximately a half pound higher than quick service chamber pressure, it moves the piston and slide valve back to release position, cutting off further brake pipe reduction.

As the brake pipe reduction continues the quick service valve repeats this movement, each time reducing the brake pipe pressure a small amount and thus continuously propagating the brake pipe reduction from car to car. For split or successive brake pipe reductions, as generally used in passenger service, the quick service valve operates during each reduction to perform the quick service function as described. It therefore appreciably reduces the time required to obtain service brake application, particularly on long trains.

Service Application—Plate 4

The local reduction in brake pipe pressure created by the preliminary and second stage quick service application increases the differential of auxiliary reservoir pressure in chamber C over brake pipe air in chamber A of the service piston. This is sufficient to overcome the resistance of the slide valve so that the piston, slide valve and graduating valve move to Service Position.

The forward movement of the slide valve disconnects the preliminary quick service ports *c* and *d* from the Q. S. Vol. and seat port *d1*, thus terminating preliminary quick service, after which the Q. S. Vol. blows down through choke 82 to atmosphere, as previously described. Slide valve ports *a* and *b* are disconnected from seat ports *a1* and *b1*, thus cutting off supply of auxiliary reservoir air to chamber *K* of the release piston; and seat port *a1* is connected to the slide valve exhaust by cavity *p*, thereby exhausting the air in chamber K of the release piston. Auxiliary reservoir air in chamber D then overcomes spring 116 and moves the release piston 110 and release slide valve 112 to the right, thereby disconnecting the displacement reservoir passage 3 from exhaust passage *10*, to permit the development of pressure in the displacement reservoir.

Cavity *n* in the slide valve connects seat ports *d1* and *3d*, permitting brake pipe air from passage *1c* to flow through passage *1d*, cavity in the limiting valve slide valve 136, passage *1k*, past check valves *74b* and *73b*, passage *d2*, choke 14, passage *d1*, service slide valve cavity *n*, and passages *3d*, *3c* and *3* to pipe 3 and the

displacement reservoir. This is the *third* stage of quick service reduction controlled by choke 82a in passage 3d.

Brake pipe air thus continues to flow to the displacement reservoir, continuing the local reduction in brake pipe pressure until the quick service limiting valve closes. Displacement reservoir air flows through passage *3a*, passage W in blanking plate 10 and passages *16a* and *16* to the relay valve pipe 16, and to the face of limiting valve diaphragm 71. When the pressure on the face of the limiting valve diaphragm reaches approximately 10 pounds, spring 140 is overcome and the diaphragm is deflected, moving the limiting valve slide valve 136 so that its cavity disconnects passages *1d* and *1k*, thus preventing further flow of brake pipe air to the displacement reservoir and thereby terminating all control valve quick service activity. The first stage of service brake application with the limiting valve open is shown on Plate 4. A supplemental view shows the second stage of service application in which the limiting valve is closed.

Meanwhile, as the slide valve moves to service position, service port *f* registers with seat port *3b*, permitting auxiliary reservoir air in chamber C to flow through passages *3b* and *3* to the displacement reservoir at a rate controlled by the service choke 8 in passage *3b*. Displacement reservoir air flows through passage 3a, passage W in blanking plate 10 and passages *16a* and *16* to the relay valve which is thereby operated to apply the brakes. The pressure developed in the displacement reservoir is dependent on the amount of brake pipe reduction. If more than full service reduction is made before the brake valve is lapped, pressure in the auxiliary reservoir and displacement reservoir will fully equalize.

Check valves 73b and 74b in the service portion lift and permit free flow of brake pipe air to the displacement reservoir during quick service reduction, but in the event of an over-reduction or an emergency brake application in which the brake pipe pressure is reduced lower than the pressure in the connected auxiliary and displacement reservoirs, the check valves seat and prevent back flow from these reservoirs to brake pipe.

In the emergency portion, the safety valve passage *s1* is connected through cavity *s* in the emergency slide valve 29 and passages *3f*, *3h*, *3c* and *3* to the displacement reservoir. Thus, displacement reservoir air builds up under the safety valve, which is set to open at approximately 60 pounds, to which maximum displacement reservoir pressure is thereby limited in service brake application.

When the release piston and slide valve move to application position seat passage *2c* is blanked, preventing further charging from auxiliary reservoir passages *2c*, *2f*, past check valves 73c and 195, and passages *2k* and *2a* to the emergency reservoir. When displacement reservoir pressure builds up through passage *3k* to approximately 10 pounds, spring 191 of the interlock valve is overcome and the interlock diaphragm 180 is deflected, moving the interlock slide valve 183 to the right. In this position cavity *z* in the slide valve connects emergency reservoir passage *2d* to auxiliary reservoir passage *2c*, this connection being established to recharge the auxiliary reservoir from the emergency reservoir during graduated release, as later described. By positively keeping this connection closed until the service

slide valve moves to service position the release interlock valve prevents back flow from emergency to auxiliary reservoir during the time the service slide valve is in release position, thereby stabilizing the slide valve. This is especially desirable when the control valve is used in the electro-pneumatic system where the service slide valve is required to remain in release position during service operation of the straight air brake.

The service reduction in brake pipe pressure also reduces the pressure in chamber *B* on the face of the emergency piston 35 slightly lower than quick action chamber pressure in chamber *E* on the slide valve side of the piston. The piston and graduating valve 30 move to the right until the piston spring guide 48 contacts the slide valve. In this position the piston closes the charging choke 27, and vent port *t*, (through graduating valve 30), registers with exhaust port *y* in the slide valve. This allows quick action chamber air to flow to atmosphere and reduce pressure in the quick action chamber back of the emergency piston at the same rate that brake pipe pressure is being reduced on the face of the piston. This keeps quick action chamber pressure from attaining a differential over brake pipe pressure sufficient to move the piston and compress the piston spring 49 enough to cause the graduating valve to open port *t1* and cause an emergency brake application.

By this means the emergency piston is stabilized against undesired emergency, and emergency application is made available any time the system is charged, as described under "Emergency."

When a brake application is made, air from the displacement reservoir builds up in chamber *B* on the face of the relay valve piston 17 of the B-3 relay valve, (Fig. 39) moving the piston and attached piston lever 19 upward. Application valve spring 38 resists the first

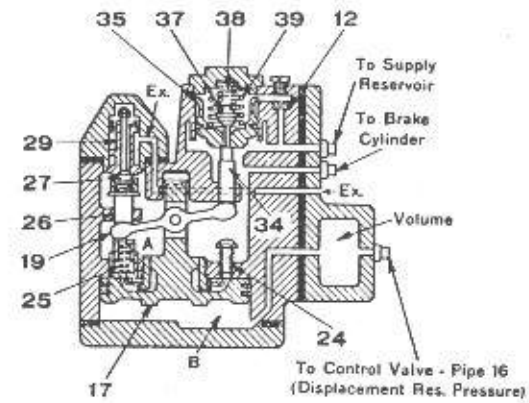

Fig. 39. Type B-3 Relay Valve—Application Position

movement and thus fulcrums lever 19 at the right end, between application valve stem 34 and adjusting screw 24. The left end of piston lever 19 moves upward, lifting exhaust valve stem 26, seating exhaust valve 27 on its valve seat on piston 29 and moving the latter against its bushing seat, thus limiting the upward travel of the left end of lever 19. This closes off the connection between the brake cylinder (chamber *A*) and the exhaust passage *Ex*. As piston movement continues upward, lever 19 now becomes fulcrumed at the left end and application valve stem 34 is lifted, unseating application

valve 37. This permits supply reservoir pressure above the application piston 35 to flow into chamber *A* and to the brake cylinder faster than the rate of supply permitted by choke 12, and the reduced pressure above allows supply reservoir pressure underneath to lift the piston, permitting supply reservoir pressure to flow to brake cylinder. By reducing the force required to open the large application piston 35, the valve 37 and the choke 12 thus function to provide easy, sensitive operation of the application valve.

At the F-6 relay valve, Plate 9, air from the displacement reservoir flows through strainer 17, passages *16* and *16a* to diaphragm chamber A, and passages *17* and *17a* to diaphragm chamber K; also through passage *17*, past supply valve 92 to the face of diaphragm 85, thence through passages *19* and *18* to diaphragm chambers P and N. When approximately seven pounds pressure is obtained in chamber C, inshot diaphragm 85 is deflected, compressing spring 88 and moving piston 84 sufficiently to permit spring 94a to seat the supply valve 92, cutting off further flow to diaphragm chambers N and P. The seven pound initial pressure inshot thus obtained in all the diaphragm chambers is directly effective in chamber P where it acts on diaphragm 38, overcomes the resistance of spring 42 and deflects the diaphragm, moving the self-lapping portion to application position. The exhaust valve 23 and its piston 25 are seated by the lever 43 and the application valve 32 and its piston 30 are opened, permitting supply reservoir air to flow to the brake cylinders. This provides a low brake cylinder pressure sufficient to take up brake rigging slack and apply the brake shoes to the wheels.

After the inshot supply valve closes, the seven pounds pressure in chamber P is retained, thus maintaining this inshot pressure directly on diaphragm 38 while further build-up from the displacement reservoir can take place only through passages *16a* and *17a* to chambers K and A. This additional pressure is transmitted through the diaphragm stack to the main diaphragm 38 but, as diaphragm 64 has an area only 60% of diaphragm 38, the effective pressure on the main diaphragm is limited to this ratio. The self-lapping portion will, therefore, develop approximately this ratio of brake cylinder pressure and then lap off. Consequently, the brake cylinder pressure realized from any given reduction in brake pipe pressure will be approximately 60% of the displacement reservoir pressure. For a full service application the displacement reservoir pressure is approximately 60 pounds, as limited by the control valve safety valve. When the B-3 relay valve is used the self-lapping portion will reproduce an equivalent brake cylinder pressure; when the F-6 relay valve is used the self-lapping portion will reproduce brake cylinder pressure in an approximate 60% ratio to displacement reservoir pressure.

Service Lap Position—Plate 5

When the desired amount of brake pipe reduction has been made and auxiliary reservoir pressure is reduced slightly below brake pipe pressure by flowing to the displacement reservoir, the service piston 93 and its graduating valve 99 move to the right until the piston stem shoulder engages the slide valve, in which position the graduating valve blanks the service port *f* through the slide valve and cuts off further flow of auxiliary

reservoir air to passage *3b* and the displacement reservoir. The release piston 110 and its slide valve 112 remain in application position, holding the exhaust passage *10* closed, and the brake applied.

The emergency piston 35 and graduating valve 30 return to charging position, blanking the vent port *y* in the slide valve, thereby preventing further reduction of quick action chamber pressure.

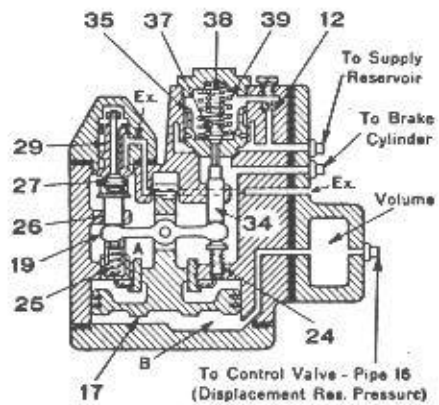

Fig. 40. Type B-3 Relay Valve—Lap Position

At the B-3 relay valve, brake cylinder pressure continues to build up in chamber A, Fig. 40, and on the back of piston 17 until it equals displacement reservoir pressure on the face of this piston (chamber B), when springs 39 and 38 return the application piston 35 and its valve 37 to their seats and move stem 34, the right end of lever 19, and piston 17, downward. During this movement the left end of the lever pivots between spring

25 and stem 26 and holds the exhaust valve seated. This is lap position in which the relay valve maintains brake cylinder pressure against leakage, as any reduction in brake cylinder pressure (chamber A) on the back of piston 17 below that in the displacement reservoir on the face of the piston (chamber B) causes lever 19 to move upward, opening the application valve 37 and allowing supply reservoir air to flow to brake cylinder until the balance is restored.

At the F-6 relay valve, Plate 9, the self-lapping portion operates in the same manner, maintaining brake cylinder pressure at approximately 60% of displacement reservoir pressure in diaphragm chamber K.

Release and Recharge after Service Application—Plates 2 and 5

During a service brake application, the emergency reservoir remains at the pressure charged previous to the brake application. When brake pipe pressure in chamber A on the face of the service piston is increased by moving the locomotive brake valve handle to Release or Running position, the higher pressure returns the service piston and slide valve to release position where port *a1* is disconnected from the exhaust port Ex. and connected to auxiliary reservoir air in the slide valve chamber C, through port *a* in the slide valve. Auxiliary reservoir air is thus present on both sides of the release piston 110. The piston spring 116 then moves the release piston and slide valve to the left, the slide valve cavity Q connecting the displacement reservoir passage 3 to the exhaust passage *10*, releasing the brake. Passage *2c* is uncovered by the release slide valve and emergency

reservoir air then flows through passages *2*, *2a*, *2d*, cavity *z* in the interlock slide valve, and passage *2c* to release slide valve chamber D, thence to the auxiliary reservoir through passage *5*, at a rate controlled by choke R in passage *2a* of graduated Release Cap 121. This provides for the Graduated Release and Quick Recharge Features. The quick recharge feature provides positive and prompt release of brakes throughout the train by recharging the auxiliary reservoirs from emergency reservoirs during initial release and permitting a quicker build-up of brake pipe pressure throughout the train than possible if all recharge were from the brake pipe.

When the displacement reservoir pressure on the left of interlock diaphragm 180 is reduced to approximately six pounds, spring 191 moves release interlock slide valve 183 to the left where cavity *z* disconnects passages *2c* and *2d*, preventing further flow from the emergency reservoir to the auxiliary reservoir.

Overcharging the quick action chamber during release and possible undesired operation of the emergency piston is prevented by the spillover check valves 52 and 51, which unseat and allow flow of air from the quick action chamber and emergency slide valve chamber E to the emergency reservoir passage *2g*, when quick action chamber pressure slightly exceeds that in the emergency reservoir, but prevent against back flow during brake application.

When displacement reservoir pressure on the face of the B-3 Relay valve piston 17 (Fig. 36) is reduced, brake cylinder pressure on the back of the piston causes it to

move downward and, as the lever 19 is fulcrumed at its right end, moves the left end of the lever downward, allowing exhaust valve 27 to open. Brake cylinder pressure flows past the exhaust valve, thus balancing the pressure on the exhaust piston 29 and permitting it to open easily. Brake cylinder air in chamber A then flows to exhaust Ex.

If displacement reservoir pressure is completely released, brake cylinder pressure will also completely release. If only a partial release of displacement reservoir pressure is made, brake cylinder air will continue to flow to exhaust until the pressure on the back of the piston 17 is lower than that on the face, at which time the piston moves upward to lap position, seating the exhaust valve and exhaust piston and cutting off further flow of brake cylinder air to exhaust.

When displacement reservoir pressure is reduced at the F-6 relay valve, Plate 9, the reduction first occurs in passage *16a* and the spring chambers of check valves 51, 51a and 51b. The greater pressure in chamber K unseats check valve 51b and flows directly through passages *16a* and *16* to the displacement reservoir, thus bypassing the inshot valve portion. The self-lapping portion then operates to release brake cylinder pressure in an approximate 60% ratio to displacement reservoir pressure, and will lap for partial reductions as described for the B-3. When displacement reservoir pressure is reduced below seven pounds, the air in diaphragm chambers N and P lift check valves 51 and 51a and flows directly through passages *19a* and *18a* to passages *16a* and *16* to the displacement reservoir, thus releasing

the pressure from diaphragm cavity C of the inshot portion. Inshot spring 88 then opens the supply valve 92 and release spring 42 returns the diaphragm stack to release position. With all pressure removed from the main diaphragm 38, the self-lapping portion releases all brake cylinder pressure.

Release Insuring—Plates 1 and 4

The release insuring feature operates to positively release the brake in the event that excessive friction prevents prompt movement of the service slide valve to release position after brake pipe pressure has built up in excess of 2 pounds over auxiliary reservoir pressure. This function is provided by a release insuring valve 129 which is shown *open* on Plate 1. Chamber *F* on one face of diaphragm 123 of this valve is connected to brake pipe pressure through passage *1c*. Chamber *M* on the other face of the diaphragm is connected to auxiliary reservoir pressure through passage *5c*. Thus, as long as brake pipe pressure does not substantially exceed auxiliary reservoir pressure, the spring 130 keeps valve 129 seated, closing connection between chamber *M* and passage *g1*. In service position of the service slide valve, Plate 4, passage *g1* registers with the slide valve exhaust cavity *P*. Should the service slide valve fail to move to release position when the brake pipe pressure exceeds auxiliary reservoir pressure by more than 2 pounds, the greater brake pipe pressure overcomes the release insuring spring 130, deflects diaphragm 123 and unseats valve 129, connecting auxiliary reservoir air from chamber *M* to passage *g1* thence to the exhaust cavity *P*. This reduces auxiliary reservoir pressure until brake pipe

pressure has obtained a sufficient excess to move the service piston to release position. In release position, Plate 2, the slide valve cuts off the exhaust cavity *P*, and connects passage *g1* to auxiliary reservoir air in slide valve chamber *C*, (through port *g*), thus equalizing the pressures on the release insuring diaphragm and terminating the release insuring activity.

Graduated Release—Plates 2 and 6

If it is desired to reduce the brake cylinder pressure in steps, that is, to "graduate it off," the brake valve handle must be returned to Lap position before the brake pipe pressure has been fully restored. In other words, the brake will be entirely released if the brake pipe pressure is fully restored, but if the pressure is only partially restored, the brake will only partially release.

After the brake pipe pressure has been increased by the initial release so that the service piston and slide valve return to release position, port *a* in the slide valve registers with seat passage *a1*, and auxiliary reservoir air flows to chamber *K* on the spring side of release piston 110. With air pressure on each side thus balanced, the release piston and attached slide valve are returned to release position by spring 116, allowing displacement reservoir air to flow to the atmosphere through passage *3*, cavity *Q* in the slide valve and the exhaust passage *10*.

While brake pipe pressure in chamber *A* on the face of the service piston does not increase after the brake valve handle is lapped, auxiliary reservoir pressure in service slide valve chamber C is increasing owing to air flow from the emergency reservoir through passages *2* and *2a*, choke R, passage *2d*, cavity *z* in the release inter-

lock slide valve 183, passage *2c* and release slide valve chamber D and thence through passage *5g*. The release interlock slide valve 183 is held in its right hand position, maintaining connection between passages *2d* and *2c* through cavity *z* as long as displacement reservoir pressure on the face of the release interlock diaphragm 180 exceeds approximately seven pounds.

The pressure in chamber C consequently becomes greater than brake pipe pressure in chamber A acting on the piston face, resulting in movement of piston 93 and graduating valve 99 toward service position until stopped by spring guide 96 engaging with slide valve 98. This is *Graduated Release Lap Position*, Plate 6, in which cavity *m* in the graduating valve connects slide valve ports *a* and *b*, thus venting the air from chamber *K* on the right of the release piston through passage *a1*, slide valve port *a*, graduating valve cavity *m*, slide valve port *b*, passage *b1*, and interlock slide valve cavity *y* to the interlock slide valve exhaust Ex. Auxiliary reservoir pressure in chamber D then moves the release piston and slide valve to the right, cutting off cavity *Q* connection between the displacement reservoir passage *3* and the exhaust passage *10*. This movement also blanks the emergency reservoir seat port *2c*, thereby stopping further flow of emergency reservoir air to the auxiliary reservoir.

With the release slide valve exhaust thus closed, the air remaining in the displacement reservoir is retained and can be released in successive steps by graduated release operation. The amount of reduction in displacement reservoir pressure for any given graduation depends on the amount of air pressure that has been restored in the brake pipe, this condition existing until displacement reservoir pressure is reduced to approximately six pounds, at which point the release interlock spring 191 moves the release interlock slide valve 183 to the left.

In this position, Plate 2, the release interlock slide valve cuts off the cavity *z* connection between passages *2c* and *2d*, terminating auxiliary reservoir recharge from the emergency reservoir. Brake pipe pressure continues to build up in chamber A on the face of the service piston so that the service piston and slide valve remain in release position, where slide valve port *a* connects auxiliary reservoir air from slide valve chamber *C* to passage *a1* and chamber *K* on the spring side of release piston 110. With auxiliary reservoir air also present in chamber D on the opposite face of the piston, spring 116 holds the piston and slide valve 112 in release position where cavity *Q* connects the displacement reservoir passage *3* to the exhaust passage *10*, fully releasing the brakes.

In graduated release lap position, the graduating valve is stabilized against movement to preliminary quick service position by service piston spring 95 and thus cuts off connection between slide valve ports *c* (Q. S. Vol.) and *d*; but, if, for any reason, the graduating valve should move far enough to permit cavity *k* to connect these ports, preliminary quick service application is definitely annulled by the limiting valve which closes with approximately 10 pounds displacement reservoir pressure.

As displacement reservoir pressure is graduated off, the B-3 relay valve operates to reduce brake cylinder an equal amount in the manner already described, or, in case of the "F-6" relay valve, an approximate 60% ratio reduction in brake cylinder pressure is made.

Direct Release—Plate 2

When the Graduated Release Cap 121 is placed in Direct Release Position as indicated on the supplementary view on Plate 2, passage *2a* is cut off from passage *2d*, thereby annulling the Graduated Release and Quick Recharge functions, as recharge from the emergency reservoir is eliminated. Recharging takes place from the brake pipe as described under Release.

Emergency Position—Plate 7

When an emergency rate of brake pipe reduction takes place from any cause, quick action chamber pressure cannot reduce through the vent port *t* in the emergency graduating valve 30 and port *y* in the slide valve to atmosphere at the same rate; therefore, sufficient differential is built up across the emergency piston to compress spring 49 and allow the graduating valve 30 to move far enough on the slide valve to open port *t1* in the slide valve which registers with port *t2* in the seat, allowing quick action chamber air to flow to the face of vent valve piston 42. The resulting movement of this piston unseats the vent valve 40, opening a large and direct passage from brake pipe passage *1b* to atmosphere. The rapid venting of brake pipe air causes an emergency reduction rate of brake pipe pressure to pass serially and rapidly through the train, due to the same

operation of connected valves, and insures the prompt movement of valves on other cars to emergency position.

The rapid reduction of brake pipe pressure causes the emergency piston and slide valve to move to the extreme right position, which carries slide valve port *t1* out of register with seat port *t2*, but port *t2* is now uncovered by the tail port *t3* in the slide valve so that quick action chamber pressure remains connected to the vent valve piston.

The emergency slide valve now connects the spring side of high pressure valve 44 to the exhaust port *Ex.*, through passage *h1* and cavity *h2* in the slide valve 29. This vents air pressure from the spring side of the high pressure valve, and emergency reservoir air in passage *2*, acting on the outer area of the face, unseats this valve, permitting emergency reservoir air to flow through passages *3h*, *3c* and *3* to the displacement reservoir, the rate of flow being controlled by choke 21 in passage *3h*. Meanwhile, the emergency rate of reduction in brake pipe pressure has caused the service piston and slide valve to move to the extreme left where the graduating valve uncovers the service port *f*, through which auxiliary reservoir air flows into passage *3b* and to the displacement reservoir passage *3*, combining with the flow from the emergency reservoir.

As both the emergency reservoir and the auxiliary reservoir thus equalize into the displacement reservoir during emergency, and the safety valve passage *s1* is blanked by the emergency slide valve, a higher displacement reservoir pressure is obtained than is possible from a full service application.

While quick action chamber air is reducing through choke 20 in vent valve piston 42 and choke 67 in the cover, the rate of exhaust is such that the vent valve will remain open a definite time until the pressure is reduced to a certain value, when spring 39 will reseat the vent valve. The purpose of this is threefold—first to insure transmission of quick action, second to prevent release of an emergency brake application before the train is at rest (in order to avoid possible damage to the train), and third, to insure closure of the exhaust so that the brake pipe pressure can be restored when desired.

The B-3 or F-6 relay valve operates as described under "Service" to develop pressure in the brake cylinders, this pressure being equal for the B-3 relay valve, and, approximately, 60% of displacement reservoir pressure for the F-6 relay valve.

Release After Emergency Application

Accelerated Release Position—Plate 8

When brake pipe pressure on the face of the emergency piston is increased at proper rate after emergency application, the piston moves to the left, compressing accelerated release spring 63, and the emergency slide valve connects emergency reservoir pressure to the spring side of the high pressure valve, through cavity *h* in the slide valve and seat passages *2g* and *h1*. With air pressure thus balanced on the high pressure valve, spring 47 moves the valve to its seat, cutting off the supply of emergency reservoir air to the displacement and auxiliary reservoirs, and no further change takes place in emergency reservoir pressure (after emergency application) until the service slide valve moves to release position and connects this pressure to the auxiliary reservoir.

With the emergency slide valve in accelerated release position, the displacement reservoir is connected to the underside of rubber seated check valve 52a, through passages *3c*, *3h* and *3f*, cavity *S* in the slide valve and passage *3g* in the seat.

Since the displacement reservoir and the auxiliary reservoir are connected, through port *f* in the service slide valve (which is still in service position), the pressure of these combined volumes under check valve 52a is greater than brake pipe pressure above from passage *1g*. Combined displacement reservoir and auxiliary reservoir air is, therefore, permitted to flow through passages *1g* and *1b* into the brake pipe until these pressures are within a few pounds of equalization, thus providing a quick, serial initial build-up of brake pipe pressure.

Since auxiliary reservoir pressure is being partially reduced while the brake pipe pressure is being initially built up throughout the train, the development of that brake pipe pressure needed to release the brakes is accomplished much sooner than it would be by raising brake pipe pressure through the brake valve alone and, therefore, a very prompt and positive release of the brake is accomplished.

The quick action chamber is being charged through the charging choke 27. Return spring 63 will move the emergency piston and slide valve from accelerated release to charging position as soon as the pressures on both

sides of the emergency piston become substantially equal. This slide valve movement blanks port *3g* in the seat thereby preventing further flow of displacement reservoir air past the accelerated release check valve to the brake pipe. The accelerated release check valve seats and prevents brake pipe air from flowing to the displacement reservoir in case the emergency slide valve is forced to accelerated release position when displacement reservoir pressure is lower than brake pipe pressure.

When brake pipe pressure becomes slightly in excess of auxiliary reservoir pressure the service piston and slide valve are moved to release position and the brake will be released and reservoirs recharged as previously described under "Release and Recharge after Service Application."

Duplex Release Valve

A duplex release valve is attached to the service portion by means of which the auxiliary reservoir air may be drained alone or both auxiliary and emergency reservoir air may be drained at the same time.

The release valve handle 160, Plate 1, may be moved in any direction to open the release checks. The plunger 152 has two stems which are lifted to unseat the release checks 155 and 155a when the handle is moved. There is less clearance between auxiliary reservoir release check 155 and its plunger stem than between emergency reservoir release check 155a and its stem. Therefore, if handle 160 is moved part way the auxiliary reservoir release check 155 is lifted from its seat and the reservoir is drained without opening the emergency reservoir release check 155a. If handle 160 is moved its full travel both release checks are unseated and both reservoirs drained.

INSTALLATION AND MAINTENANCE

All the pipe connections are permanently made to the control valve pipe bracket and no pipes need be disconnected to remove the operating portions of the valve, loosening the bolts which hold them in place being all that is required. The bracket should be installed as near the brake pipe as possible so that the branch pipe may be short; short bends in the piping should also be avoided. Care should be taken in locating the valve to have it free from obstructions which would render inspection or removal difficult. The control valve should be placed above the general level of the piping and the piping itself so arranged as to avoid pockets in which moisture may collect. If this point does not receive proper attention, trouble may be experienced in cold weather from the freezing of water in the pipes or even in the valve.

Before installing the control valve, all the piping should be thoroughly hammered and blown out, in order to loosen and remove all scale or foreign matter. This is especially important in new installations. A suitable compound to make a tight joint should be applied on the male threaded portion only, and never in the socket. Do not use red or white lead. After the piping is complete, all the joints should be thoroughly tested under pressure with soapsuds and made air-tight.

Never remove the operating parts of the control valve while on the car. If one of the portions of the valve is not working properly, or needs cleaning and lubricating, take it down and replace by a portion in good

condition. All cleaning and lubricating should be done at a bench, by a competent man, where the liability of damage to the internal parts of the valve is least. Any attempt to remove the moving parts of the valve while still on the car is almost sure to result in a large percentage of valves being injured by careless handling or dirt getting inside the pipes or valve.

LUBRICATION

Control Valve—Service Portion

The piston, slide valve, graduating valve, and bushings must be thoroughly cleaned so as to remove all dirt, oil, gum or grease. An organic solvent type of cleaner should be used but not an alkaline cleaning solution.

The piston packing ring and its groove should be cleaned without removing the ring from the piston groove. This can be done by dipping the piston in the cleaning fluid and then moving the ring around in the groove. This operation should be repeated until the groove and ring are thoroughly cleaned, after which the excess cleaning fluid can be blown away or dried by using an air jet.

Where rings are stuck with dirt too tightly to be moved in the groove, it may be necessary to soak the ring in penetrating oil and then tap the ring gently with a hard wood block. For this purpose a maple or hickory wooden block about 1" x 1" x 4" (with square ends) should be used to tap the ring so as to drive it flush with the top edge of the groove. This tapping should start at one side of the ring joint and progress around the piston in short steps until the ring is loosened sufficiently to be moved in the groove. If this procedure will not loosen

the ring, it is evidence that the groove is binding in which case the groove must be reconditioned and a new ring fitted.

The face of the graduating valve, the upper surface of the slide valve (which is the graduating valve seat), the slide valve face, the slide valve seat and the upper portion of the bushing (slide valve spring bearing) must be glazed with the best grade of very fine pure dry air brake graphite (AAR Spec. M-913-41).

To apply the graphite, it will be found convenient to use a small wooden paddle about 8" long having a small piece of chamois skin glued to the paddle end. The width of this paddle must be somewhat less than the width of the slide valve seat in the bushing. Place a small quantity of the graphite on the chamois skin and rub the surfaces specified until they show a dark copper color. There must be no free graphite allowed to remain on the valves or seats and they must be free from any oil or grease before the graphite is applied.

Before the cleaned piston is replaced in the piston bushing, press the side of the packing ring opposite the scarf to the bottom of its groove, then introduce three drops of approved triple valve oil (AAR Spec. M-912-41) in the groove through the ring scarf opening, after which restore the ring to its normal position and carefully rotate it in its groove to distribute the oil. Position the ring scarf approximately 1" on either side of the piston top center. Next, place three drops of the triple valve oil in the clean, dry bushing and distribute it over the entire surface in a manner to avoid introducing dirt or other grit. Evenly distribute one drop of the triple valve

oil on the collar at the piston spring end of the piston. Then insert the piston and slide valve in the body, leaving them in release position, after which place three additional drops of triple valve oil in the cylinder bushing and again distribute it on the bushing surface as previously described.

The preceding instructions also apply to the Release Piston and its slide valve and the slide valves of the Quick Service Limiting Valve and Release Interlock Valve.

Control Valve—Emergency Portion

When the emergency portion is to be dismantled for cleaning, the main piston can not be removed without first removing the upper cover and taking out the diaphragm strut which serves to hold the slide valve to its seat. Damage will result if force is used to remove the emergency piston from its bushing without first removing the diaphragm strut.

The spring behind the emergency vent valve is held in place by a circular sheet metal retainer which has lugs on two opposite sides. These lugs engage under a lip around the outer end of the cavities in the body casting. To remove the spring and valve, press down on the spring retainer and tilt it so that one lug is exposed upward. When in this position, the parts can be readily removed and they can be reassembled by using the same method.

The individual parts of the emergency portion, such as pistons, rings, bushings and valves, must be cleaned and inspected in the same manner as was specified for similar parts of the service portion.

Quick Service Valve

The piston and slide valve should be lubricated in accordance with the preceding instructions for the control valve.

Relay Valves—Self-Lapping Portion

When dismantled for inspection, after cleaning all parts with an approved cleaning fluid, the small ring on the upper head of exhaust valve 29 and the ring on application valve piston 35 should be sparingly lubricated with one drop of oil and the rings moved around to distribute the oil. Bushings should be wiped with a clean cloth saturated with oil and then wiped with a clean dry cloth. Apply a thin coating of graphite grease to the upper guide bushing of the piston stem and fill the lever bearing on the stem with graphite grease. Saturate the oil pad 7 in the top of the piston chamber with oil. Before the cleaned piston is replaced in the piston bushing, three drops of oil must be placed in the groove and the ring moved around to distribute the oil. Insert the piston, then lubricate the piston cylinder sparingly and move the piston back and forth several times, after which, remove the surplus oil from the outer edge of the cylinder.

Springs and Gaskets

When the valve is dismantled for general cleaning, all springs should be inspected after cleaning. Springs which show rust pits, distortion, or have permanent set, should be rejected and replaced by springs known to be correct, and in good condition.

All gaskets and rubber seated valves may be dipped in an approved solvent to assist in the removal of greasy dirt but these parts must be promptly wiped dry after cleaning and must not be allowed to soak in the cleaning fluid.

Cleaning and Testing Brakes on Repair Tracks and Reconditioning Brake Cylinder Piston in Shops

Procedure for cleaning and testing this equipment on repair tracks is covered by Instruction Leaflet No. 2391, Sup. 2. This leaflet is supplemental to Instruction Leaflet No. 2391, Sup. 1, covering the AB Equipment. In view of the similarity between the D-22-AR control valve and the AB valve, also the AB brake cylinder and the UAHS brake cylinder, the instructions contained in Sup. 1 on the AB equipment applies as well to this equipment except as explained in Sup. 2.

GENERAL HINTS

In releasing an individual brake by means of the duplex release valve on the service portion of the control valve, the brake pipe being charged, pull the handle only far enough to open the auxiliary reservoir check but not far enough to open the emergency reservoir check, and then permit auxiliary reservoir pressure to drain only until the brake cylinder exhaust is heard to start.

When there is no air in the brake pipe, drain both auxiliary and emergency reservoirs by pulling the duplex release valve handle its full travel and holding both check valves open until all pressure is depleted.

A cut-out cock which vents brake cylinder pressure when closed is installed in the brake cylinder pipe to each truck. This provides for adjustment of piston travel or brake shoe renewal without the necessity of cutting out the brake by bleeding reservoirs in order to protect against injury due to unexpected brake applications. Thus, the brake on one truck of a car may be cut out if necessary, due to defective brake rigging without affecting normal brake operation on the other truck.

When it is found necessary to cut out the brake on a car, close the branch pipe cut-out cock (which is combined with the dirt collector) and drain both auxiliary and emergency reservoirs by pulling the duplex release valve handle its full travel and holding until the pressure is depleted.

APPENDIX

NO. "3-AP" DECELOSTAT EQUIPMENT FOR PASSENGER CARS

The No. "3-AP" Decelostat is a device which can be used in conjunction with the "HSC" brake equipment for preventing wheel sliding during brake applications. It functions, whenever a wheel starts to slip on the rail, to reduce automatically and quickly the brake cylinder pressure to a predetermined low value and then rapidly to restore the brake cylinder pressure to its normal value. If the tendency for wheel slip persists the decelostat repeats its functions. It operates similarly in either direction of car movement. It requires a flexible air connection from the valve element mounted on the bearing box of the car wheel to the truck frame and automatically provides for normal brake cylinder development in the event of failure of this connection.

PARTS OF THE EQUIPMENT

One car set of No. "3-AP" Decelostat Equipment requires the following:

Four P-3 Decelostats, one on each of the truck axles, which function during a brake application to pilot the B-3 Decelostat Valve to quickly (a) adjust brake cylinder pressure to a predetermined value when the car wheels start to slip preliminary to locking and sliding, and (b) to restore brake cylinder pressure after it reaches the predetermined value.

Two B-3 Decelostat Valves, one mounted on each of the truck bodies, which operate to adjust and restore brake cylinder air as controlled by the P-3 Decelostats when wheel sliding impends during brake applications.

Four Pieces of Flexible Rubber Hose, for connecting the P-3 Decelostat to the B-3 Decelostat Valve Control Pipe.

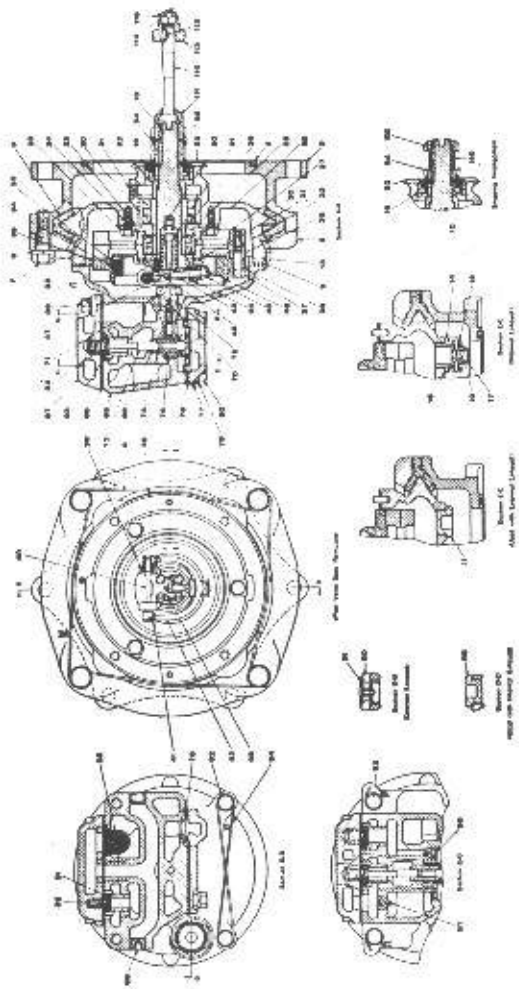

Fig. 41. Assembly View of P-3 Decelostat.

DESCRIPTION OF THE PARTS

P-3 Decelostat. Fig. 41 and Plate 17

The P-3 Decelostat is mounted on one end of each truck axle and its function is to pilot the B-3 Decelostat Valve to quickly adjust brake cylinder air to a predetermined low level when wheel sliding impends, and then quickly restore the pressure to its normal value.

The P-3 Decelostat as shown in the assembly view consists of the following portions:

(a) The drive shaft 110 and its coupling cap 111 which impart to the decelostat shaft 10 the rotation of the truck axle.

(b) The decelostat bracket 2 which contains housing 13, in which are located ball bearings 19 and 20 for mounting of decelostat shaft 10. Inertia wheel 27 with its ball bearing 29 is mounted on shaft 10. Bolted to the inertia wheel is a friction wheel 35 having three spring-loaded clutch shoes 34. Through these clutch shoes the cam plate 32 is held in driving engagement to the friction wheel. The cam lever 42, supporting the cam shaft 43 with cam roller 44, is attached to the end of drive shaft 10 and the end of the cam shaft is yoked through a pull rod 50 to spring 52 which holds roller 44 on the cam under a predetermined tension. When the retardation rate of the drive shaft exceeds a predetermined value the cam roller will roll upon the high point of the cam, moving the pull rod out against the tension of spring 52 to contact and unseat the pilot valve 70 as will be explained later.

(c) A housing cover 65 which covers the outer end of the Decelostat and contains a pilot valve body. Also located in the cover is an external vent plug 90 and vent protector 91. The Decelostat can be conditioned for an internal vent if desired, in which case external vent plug 90 is replaced by solid plug 95 and plug 11 is removed from the inside face of housing 13 and replaced with an internal vent assembly 14 consisting of a spring-loaded check valve 15 as shown in Figure 48.

The pilot valve body contains a pilot valve 70 which is normally held to its seat 72 by the tension of spring 69. An exhaust check valve 83, normally held seated by spring 84 is unseated by an exhaust valve diaphragm assembly consisting of diaphragm 76 and follower 73 to provide a large exhaust opening for actuating the Decelostat Valve as soon as pilot valve 70 is unseated to remove air from the spring side of the diaphragm. The outer face of the exhaust valve diaphragm is connected to a small volume for timing the opening of the exhaust check valve during Decelostat operation. Charging check valve 83a is used for charging the volume and is spring-loaded to prevent a quick release of the volume air pressure during Decelostat operation. Volume exhaust check valve 81 releases air pressure from the volume to a value determined by the tension of spring 82 after which further release of pressure is timed through choke 67. Choke 66 is located in the passage leading to the spring chamber of the exhaust valve diaphragm to stabilize

the Decelostat against undesired activity during normal brake releases where no wheel slip is prevalent.

The P-3 Decelostat, Plate 11, is shown inoperative and at rest. When the car is running, the drive shaft rotates the cam lever 42 and cam roller 44, the latter driving cam 32. The cam, in turn, drives the friction and inertia wheels by friction engagement of the clutch shoes 34. Both wheels are driven at the same rate as the drive shaft as long as the car axle is turning and not retarded beyond a predetermined limit.

When a brake application is made and the axle is retarded, the drive shaft is likewise retarded at the same rate. The inertia wheel continues to rotate at the original speed on its ball bearing and over-travels the drive shaft.

If drive shaft retardation is at or below a normal rate, the inertia force of the free-running inertia-wheel is balanced by the force of spring 52. The inertia wheel thus causes cam roller 44 to assume a position corresponding to the initial retardation rate. When the drive shaft retardation becomes excessive and reaches a predetermined value, the inertia wheel causes cam roller 44 to move up on the high point of cam 32, raising the cam shaft 43 and pull rod 50 to a position where the pull rod engages and unseats pilot valve 70. Unseating pilot valve 70 vents air from chamber C on the spring side of the exhaust valve diaphragm 76, causing the higher pressure on the face of the diaphragm to move it and its follower 73 to contact and unseat exhaust valve check valve 83, thus providing an exhaust for

the Decelostat line between the Decelostat and Decelostat Valve to operate the B-3 Decelostat Valve. The exhaust valve check valve 83 will remain unseated by the diaphragm follower until the pressure in chamber B beneath the diaphragm and in the connected volume has been exhausted to a value below that of spring 75, after which time the diaphragm and diaphragm follower will be moved out of contact with check valve 83, allowing spring 84 to seat the check valve. As soon as check valve 83 is unseated to open the exhaust connection, the pressure in chamber B below diaphragm 76 and in the connected volume is quickly dropped to approximately 15 pounds higher than that pressure in chamber C on the spring side of the diaphragm by the unseating of volume exhaust check valve 81. After the 15 pound differential is reached, check valve 81 will be closed by check valve spring 82 and further reduction in pressure of air in chamber B and its connected volume will be timed by the venting of the air through passage 7c, choke 67, and unseated check valve 83. After the pressure in these combined volumes is reduced to a point below the value of spring 75, the diaphragm and diaphragm follower will move downwardly to its normal position, allowing spring 84 to seat exhaust check valve 83 and close the exhaust so that relay valve air pressure will build up again in the Decelostat and its control pipe for subsequent operations.

When the shaft retardation decreases, cam roller 44 will roll to the low point of the cam, allowing the tension of spring 52 to draw pull rod 50 out of contact with pilot valve 70 so that it will be seated by the tension of spring 69 acting upon it.

B-3 Decelostat Valve, Fig. 42 and Plate 17

The B-3 Decelostat Valve, mounted on the truck body, operates to adjust and restore brake cylinder air pressure as controlled by the P-3 Decelostat when wheel slip occurs during a brake application. It consists of a protection valve portion housed in body 40, a release valve portion housed in body 20, and a pipe bracket portion 2, as shown in the assembly view, Fig. 42.

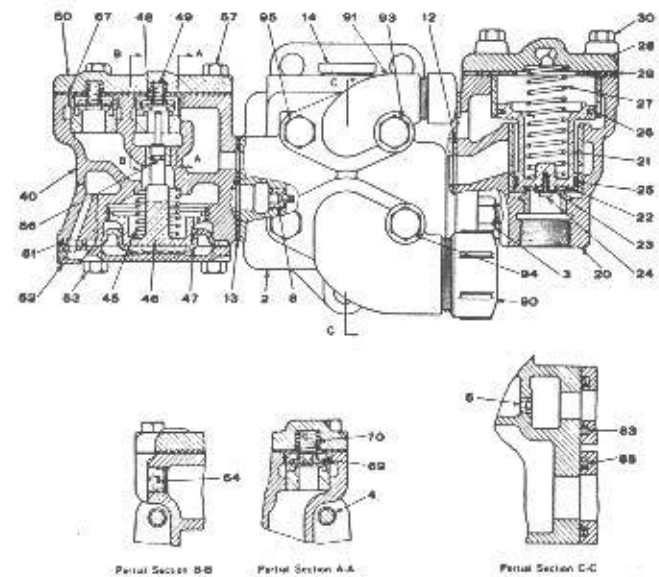

Fig. 42. Assembly View of B-3 Decelostat Valve.

The pipe bracket is bolted to the truck body and all pipe connections are made permanently to the bracket, since the pipe bracket need not be disturbed when removing or replacing the valve portions. Three choke

plugs are located in the pipe bracket and they are as follows:

1. Choke plug 5 which controls the rate of flow of relay valve air to chamber E on the spring side of protection valve diaphragm 47 and to chamber D on the outer face of the protection valve diaphragm during brake applications. The rate of charging these chambers is controlled so as not to cause undesired tripping of the Decelostat Valve. Another function of choke 5 is to protect against loss of brake cylinder air in case the control pipe to the P-3 Decelostat is broken. The loss of brake cylinder air will be that flowing through choke 5 and can be maintained by the relay valve.

2. Choke plug 8 which controls the rate of charging chamber D on the outer face of the protection valve diaphragm and volume N in the pipe bracket after quick charging check valve 48a has closed.

3. Choke X which controls the rate of charging chamber A above the release valve piston 21 to insure the piston remaining on its atmospheric seat during normal brake applications where no wheel slip is prevalent, thereby protecting against loss of brake cylinder pressure development. It provides a restricted rate of charging this chamber as compared with the rate of exhausting air from the chamber by the protection valve exhaust valve 48 during a wheel-slip operation to insure the raising of the release piston from its atmospheric seat to allow brake cylinder air to exhaust to a predetermined low level.

The Release Valve portion, housed in body 20, adjusts the brake cylinder pressure as controlled from the P-3 Decelostat when wheel-slip occurs during a brake application. It consists of a body 20, piston 21, piston seal 22, piston spring 27, and piston cover 28.

Piston 21 is held seated on its seal 22 by spring 27 under normal operating conditions. When wheel slip occurs and the air above piston 21 is vented, the relay valve air below the piston moves it upwardly off its seat, venting the brake cylinder air to a predetermined low value, after which spring 27 seats the piston to discontinue brake cylinder pressure reduction.

The Protection Valve Portion is attached to the opposite side of the pipe bracket. Its purpose is to insure that the release valve portion adjusts brake cylinder pressure to a predetermined low point, once the P-3 Decelostat functions. The Protection Valve portion consists of the following:

(a) Protection Valve Exhaust Valve 48, which is normally held seated by spring 49, permits normal brake applications and releases in case of a broken control pipe to the P-3 Decelostat.

(b) Protection valve diaphragm 47 and follower 46 which unseat protection exhaust valve 48 to provide the actuating connection from the top of the release valve piston 21 when the P-3 Decelostat exhausts the control pipe and chamber E on the spring side of the protection valve diaphragm.

(c) Quick charging check valve 48a and spring 49a which permit the quick charging of chamber D on the face of protection valve diaphragm 47 to

a value within a few pounds from the pressure on the spring side, thus insuring that the diaphragm will not unseat exhaust valve 48 during normal applications. Further charging of chamber D is controlled through choke 8.

(d) Volume exhaust check valve 69 and spring 70 which permit the exhausting of air from the pipe bracket volume N and chamber D on the face of protection valve diaphragm 47 to atmosphere during wheel-slip operation.

(e) Normal release check valve 48b and spring 49b which permit the exhausting of air from the protection valve portion to the relay valve exhaust during normal brake releases.

The B-3 Decelostat Valve parts, as shown in the diagrammatic drawing Plate 17, are in normal operative position. When the brake is applied relay valve air flows:

(a) Unrestricted through passages 2 and 2b, past the release valve piston 21 to passage 1b and the brake cylinders to apply the brake. Relay valve air also flows through branch passage 1a to chamber J above volume exhaust check valve 69 to hold the check valve on its seat.

(b) From passage 2 to passage 2a and chamber K above normal release check valve 48b to hold the check valve on its seat.

(c) Through choke 5 at a restricted rate through passages 3 and 3a to chamber E on the spring side of protection valve diaphragm 47, holding the diaphragm in its normal position as shown; also

through passage 3b, past quick charging check valve 48a, through passages 4d and 4a to chamber D on the face of the protection valve diaphragm and to the pipe bracket volume N, maintaining a pressure differential across the diaphragm equal to the value of spring 49a. Relay valve air also flows through passages 4c and 4b to chambers L and M beneath check valves 69 and 48b respectively.

(d) Through choke 8 at a restricted rate to charge to full relay valve pressure chamber D on the outer face of the protection valve diaphragm 47 and the pipe bracket volume N as well as chambers L and M.

(e) Through choke X at a restricted rate to passage 6 and chamber A above release piston 21 to hold the piston against its seal 22 and to chamber F above protection valve exhaust check valve 48, holding the latter on its atmospheric seat.

The equipment, being charged by the brake application, must be vented without initiating a wheel-slip operation when the brakes are released. As the relay valve exhausts passage 2, the brake cylinders are exhausted directly through passage 1b, past the release valve piston, and passage 2 to the relay valve and atmosphere. At the same time normal release check valve 48b is unseated by the greater pressure in chamber M and chamber D on the outer face of the protection valve diaphragm 47. Air in passages 4 and chamber D is thereby exhausted by way of the relay valve exhaust. Pressure in passage 3 and chamber E on the spring side of the protection valve diaphragm is vented through choke 5

to the relay valve and atmosphere. Passage 3 and chamber E may also vent through charging check valve 48a, passage 4d, normal release check valve 48b, and passage 2, to the relay valve. Air from passage 6 and chamber A above release piston 21 will flow back through choke X at a restricted rate to the relay valve exhaust.

When wheel-slip occurs during a brake application, the Decelostat control pipe is vented by the functioning of the P-3 Decelostat as previously explained. Venting the Decelostat control pipe results in the venting of passages 3 and 3a and chamber E on the spring side of protection valve diaphragm 47. The pressure in chamber D will raise the diaphragm and diaphragm follower upwardly to contact and unseat protection valve exhaust valve 48. This will allow air in Chamber A on the face of release piston 21 to flow through passage 6 to the atmosphere by way of check valve 48. Release piston 21 will then be forced upwardly against the tension of spring 27 by brake cylinder pressure acting upon the under side of the piston, thus unseating the piston so that brake cylinder air can exhaust immediately to atmosphere until a predetermined low level is reached. Air in passage 4d, volume N, and chamber D on the outer face of protection valve diaphragm 47 is exhausted through volume exhaust check valve 69 and passages 1a and 1b to atmosphere to a predetermined pressure of approximately 15 lbs. after which protection valve diaphragm 47 and follower 46 will be returned to normal position by spring tension and check valve 69 will be seated by the tension of spring 70. Further exhausting of air from chamber D, volume N, and passage 4d is timed by choke 8 through passage and pipe 3 to the P-3

Decelostat. Normal release check valve 48b is held seated by the flow of relay valve air to chamber K above it. As soon as protection valve exhaust check valve 48 has become seated by the tension of its spring 49, closing the atmospheric connection to passage 6, relay valve air pressure again builds up in chamber A on the face of the release piston 21 to force it against its seal 22 and close the brake cylinder exhaust. The relay valve can then re-apply the brakes as before and the B-3 Decelostat Valve will again be fully charged and ready to respond to a subsequent wheel-slip operation.

BROKEN PIPE PROTECTION

If the control pipe between the P-3 Decelostat and the B-3 Decelostat Valve should become broken before a brake application is made, an air leak will be detected at the broken pipe, and volume N, as well as chamber D on the outer face of the protection valve diaphragm can not be charged in the normal manner. Hence, diaphragm 47 cannot be moved upwardly to unseat protection valve exhaust valve 48 during a wheel-slip operation. The brake cylinder development will occur in a normal manner through the passages as described before. The air leak at the broken pipe connection will be equivalent to that flowing through choke 5 and can be considered equivalent to a small brake cylinder leakage which will be maintained by the relay valve.

If the control pipe should break during a brake application with no wheel-slip previously indicated by the P-3 Decelostat, a wheel-slip operation will occur because the protection valve diaphragm and diaphragm follower will be forced upwardly to unseat protection valve ex-

haust valve 48 to relieve pressure from the spring face of the release valve piston 21, and air pressure in volume N, passage 4d, and on the outer face of the protection valve diaphragm will be vented past unseated volume exhaust check valve 69 to passage 1b and the atmosphere. Check valve 69 will remain unseated until the pressure in passage 4 has become reduced to approximately 15 lbs., and then it will be forced to its seat by the tension of its spring. Further reduction of pressure in volume N and passage 4 will take place through choke 8 to passage 3 and the broken pipe. This closes passage 6 and the chamber on the spring side of the release valve piston so that they can become normally charged from relay valve air to close the brake cylinder exhaust. The brakes will re-apply and any future wheel-slip operation is nullified until the broken pipe is repaired.

TESTING THE DECELOSTAT EQUIPMENT

To test the operation of the Decelostat Equipment a brake application is first made while the train is standing. Then remove the vent protector from the P-3 Decelostat (if internal vent, remove plug 95). Insert a finger in the opening and twirl the inertia wheel and remove the finger. Note that a complete operating cycle of the equipment occurs as follows:

A slight blow of air from the Decelostat exhaust occurs and is immediately followed by a heavy vent of brake cylinder air at the Decelostat Valve. Following this, venting of air from both devices stops and the brakes are re-applied. Check the operation of the equipment for reverse operation in the same manner except twirl the inertia wheel in the opposite direction. Thus, the Decelostat equipment is tested for operation for either direction of car travel.

To test the protection feature of the Decelostat equipment, the finger is inserted into the opening of the Decelostat cover, as described above, but in this case after the inertia wheel is twirled (in either direction) it is held. It should be noted that a complete cycle of the Decelostat operation occurs as described above, except after the brakes are re-applied a slight blow of air continues at the Decelostat exhaust opening. When the finger is removed the exhaust of air at the Decelostat is stopped with no other activity of the equipment.

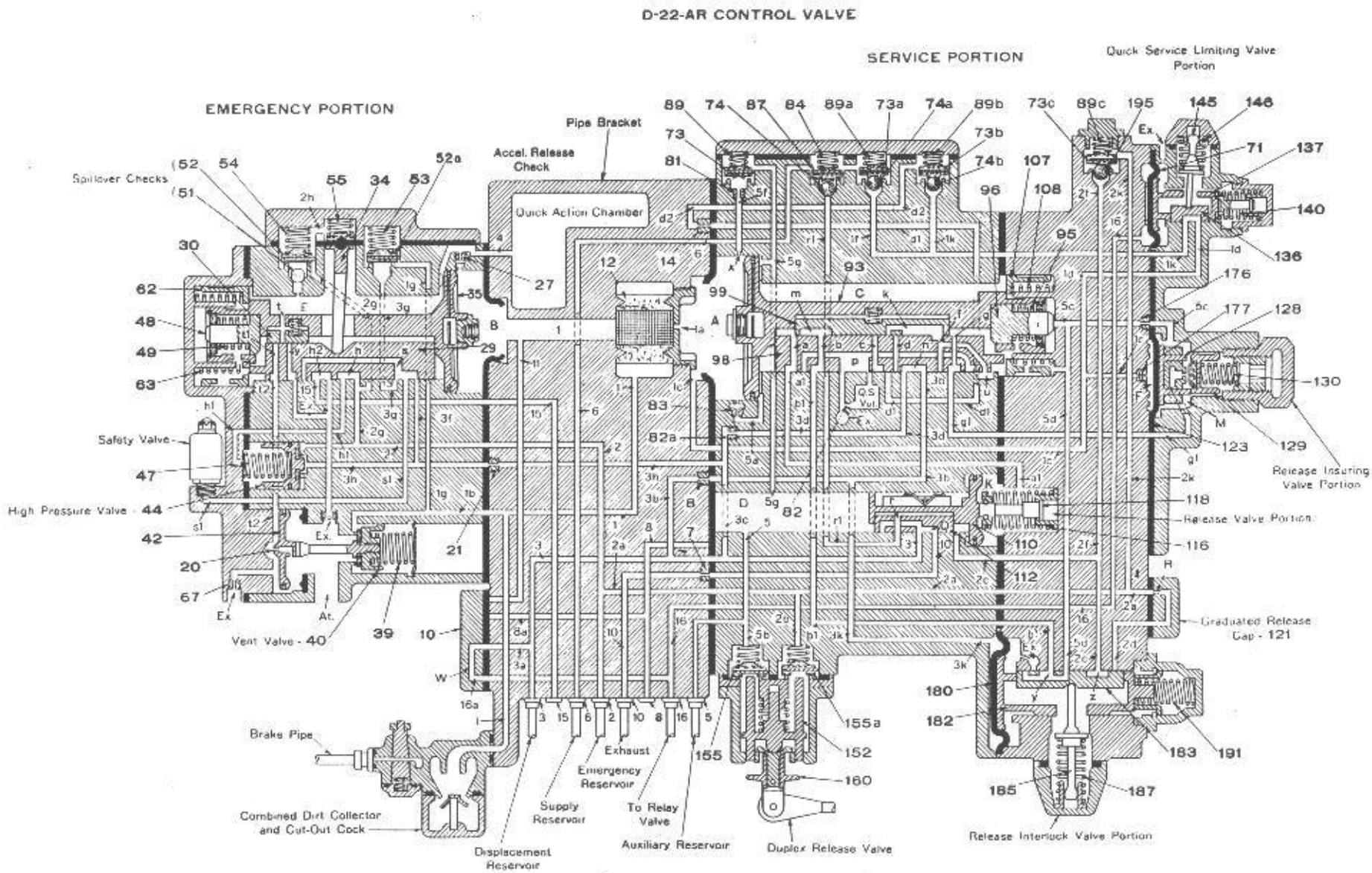

Plate I INITIAL CHARGING Position D-22-AR Control Valve

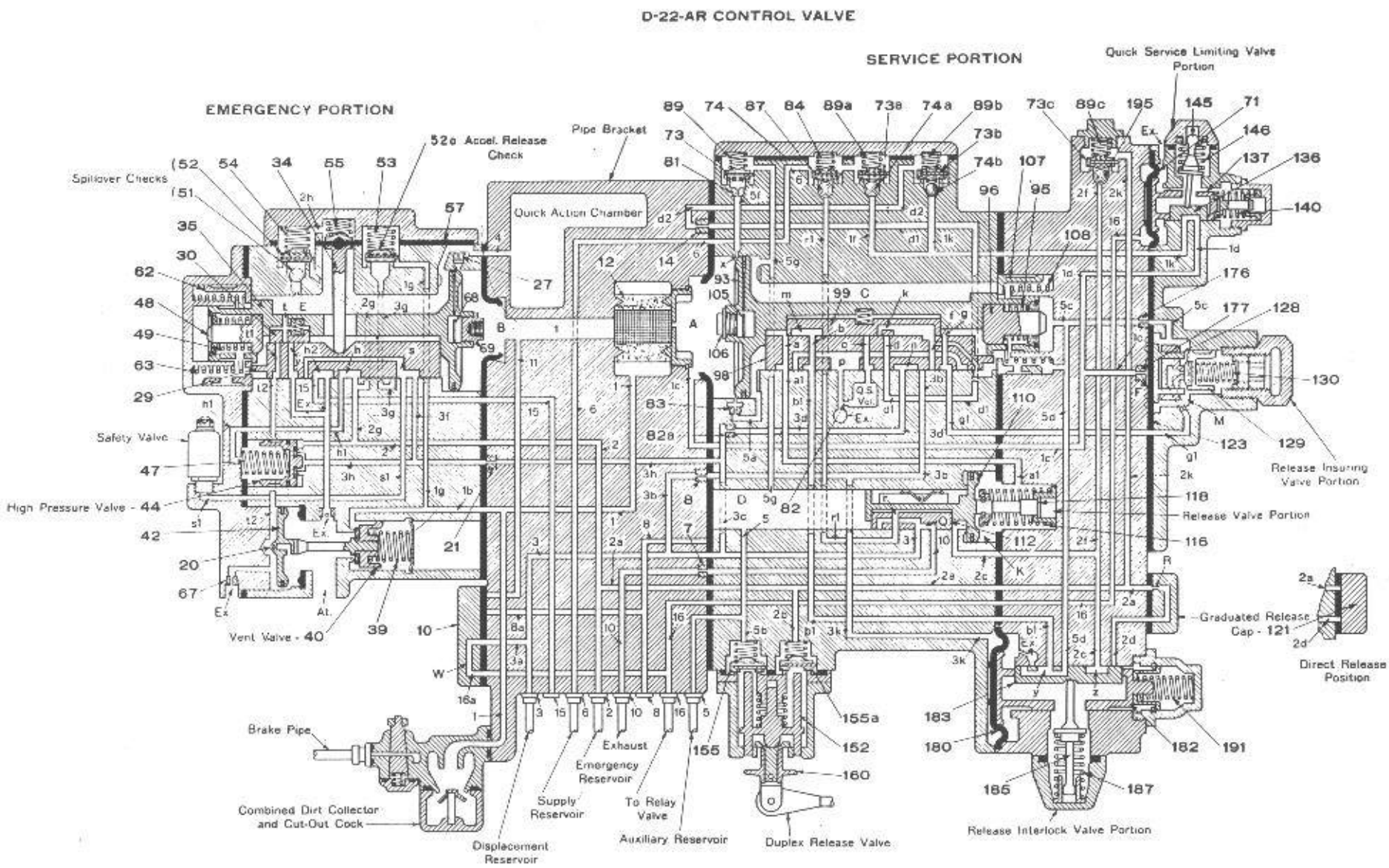

Plate 2 RELEASE Position D-22-AR Control Valve

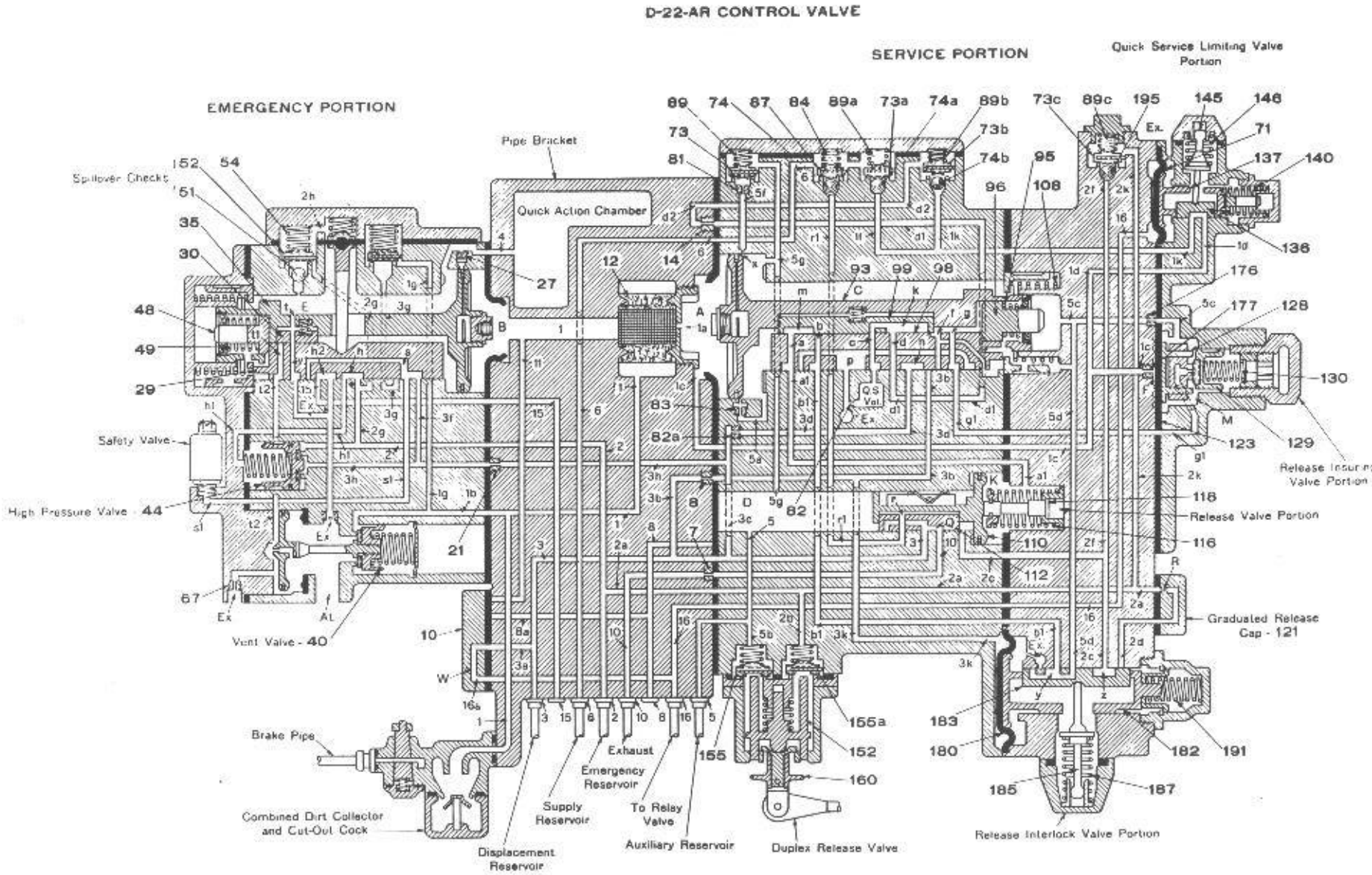

Plate 3 PRELIMINARY QUICK SERVICE Position D-22-AR Control Valve

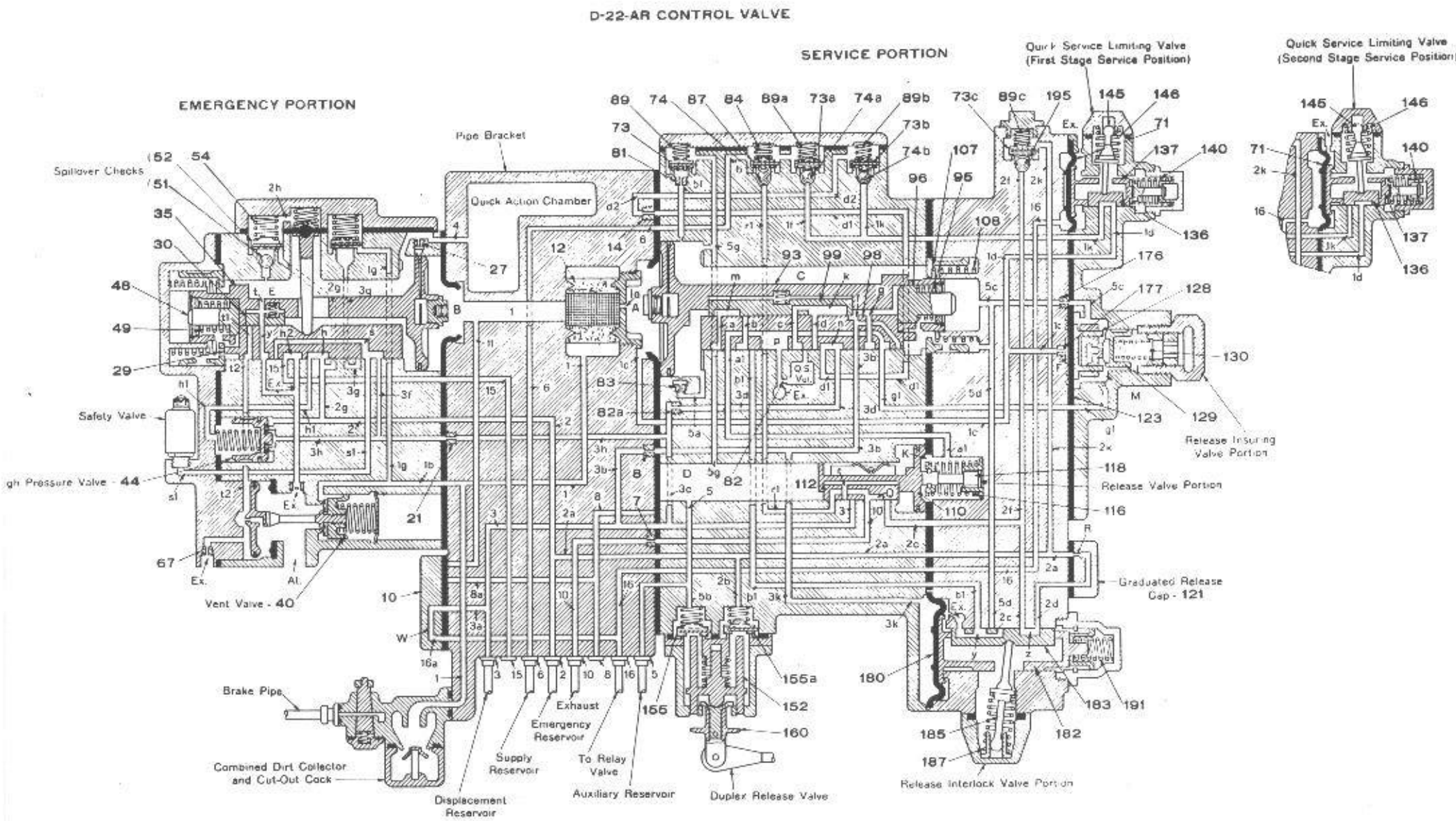

Plate 4 SERVICE Position D-22-AR Control Valve

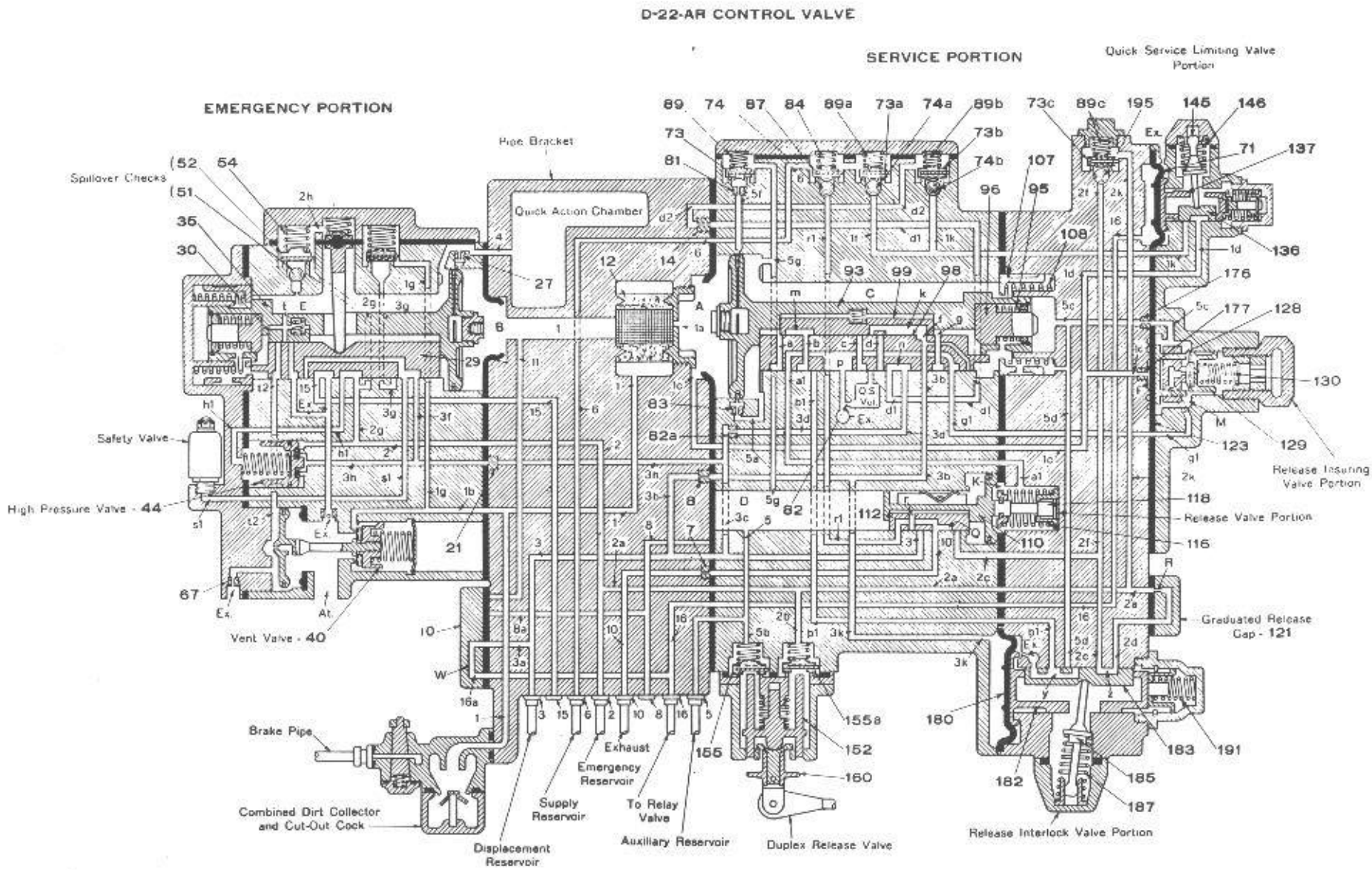

Plate 5 SERVICE LAP Position D-22-AR Control Valve

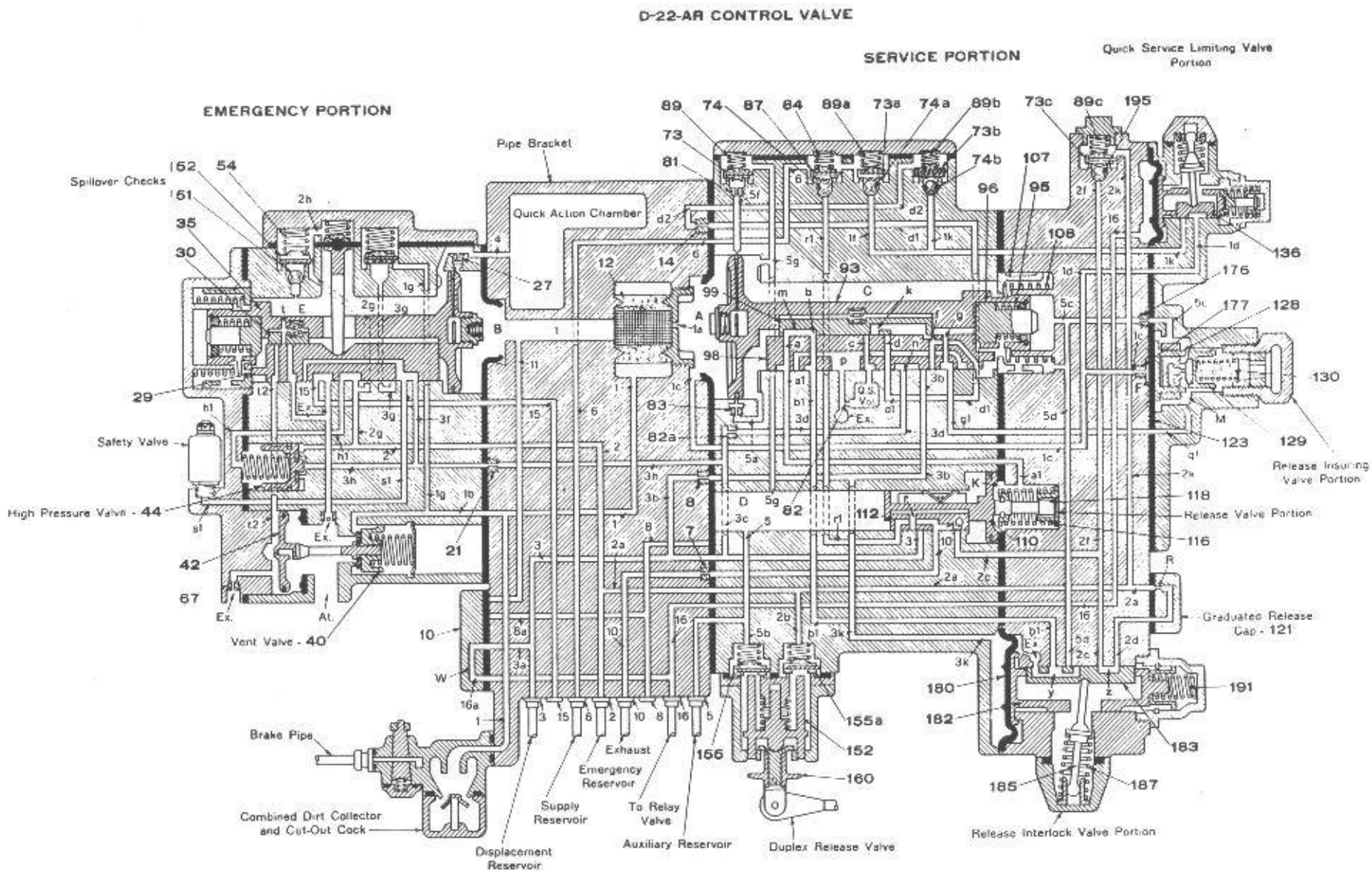

Plate 6 GRADUATED RELEASE LAP Position D-22-AR Control Valve

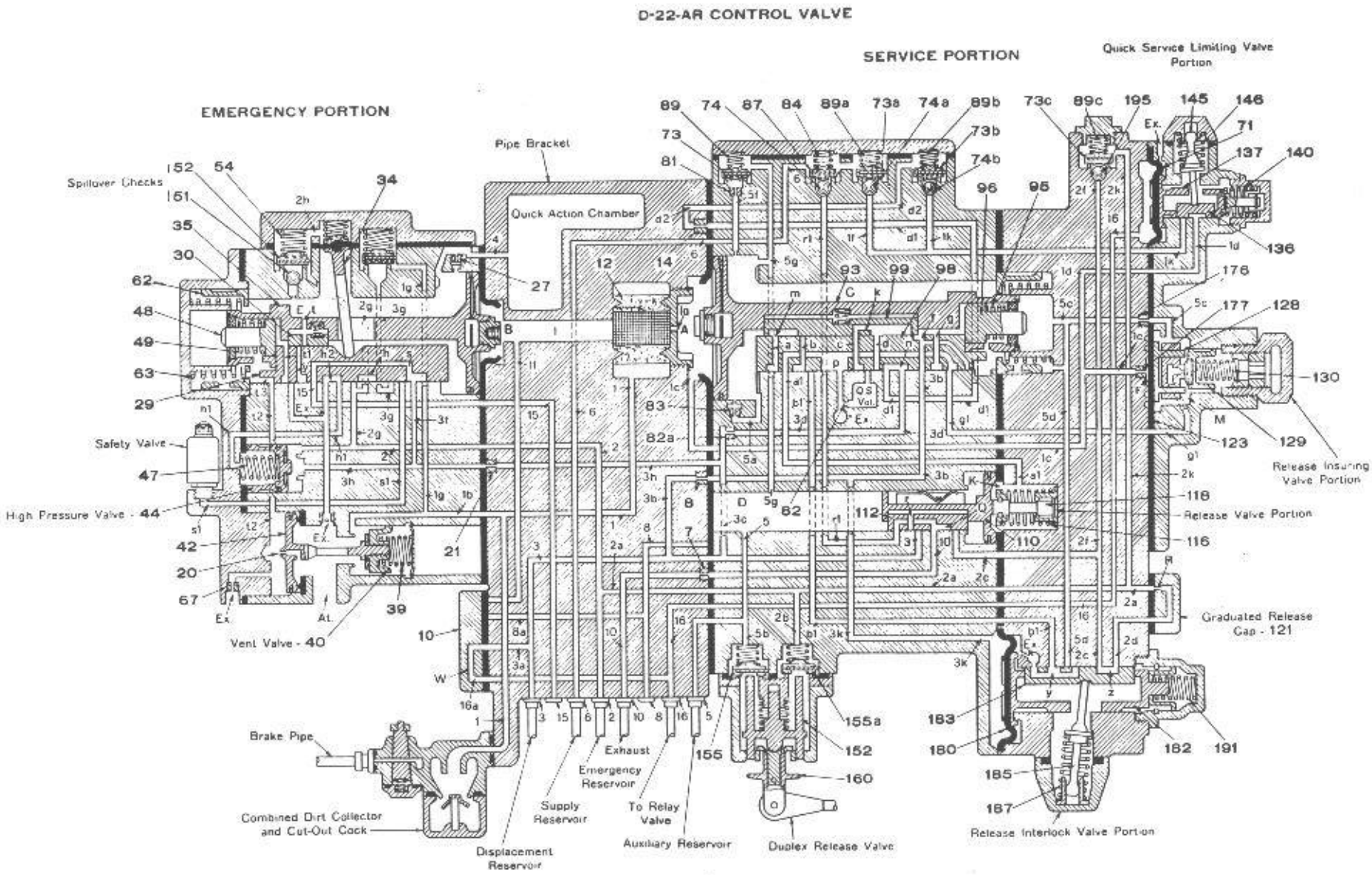

Plate 7 EMERGENCY Position D-22-AR Control Valve

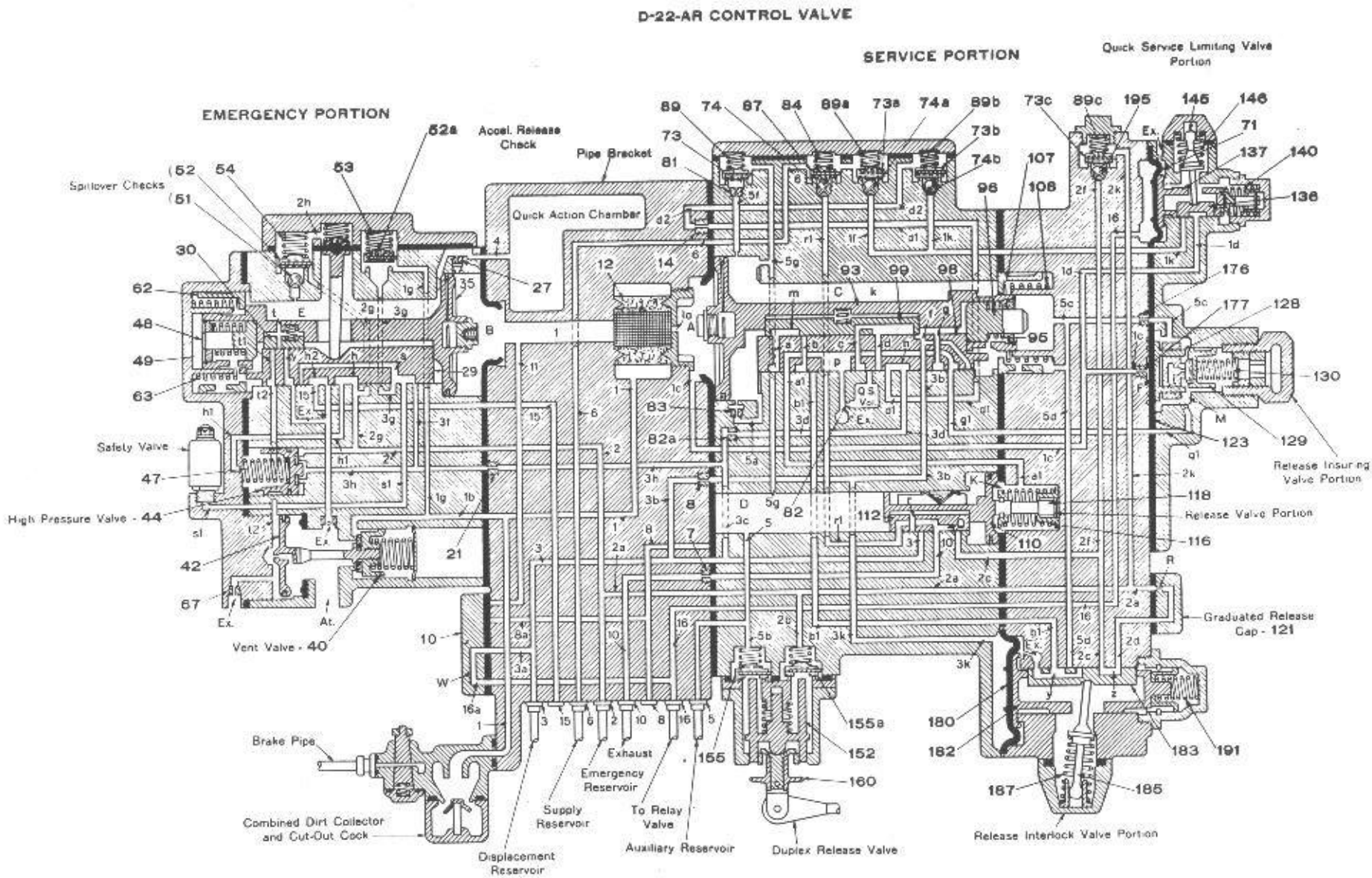

Plate 8 ACCELERATED EMERGENCY RELEASE Position D-22-AR Control Valve

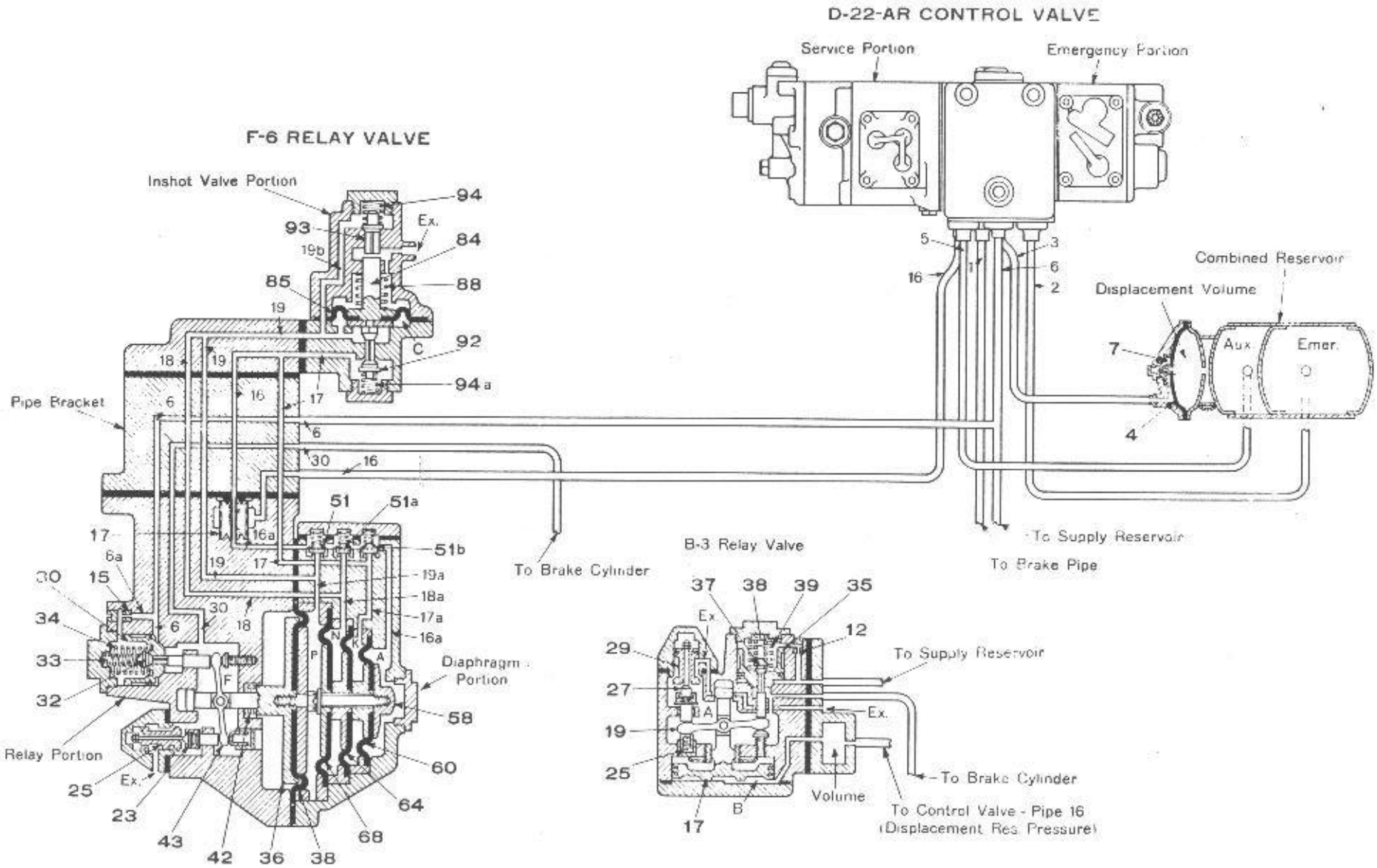

Plate 9 Diagrammatic of F-6 and B-3 Relay Valves

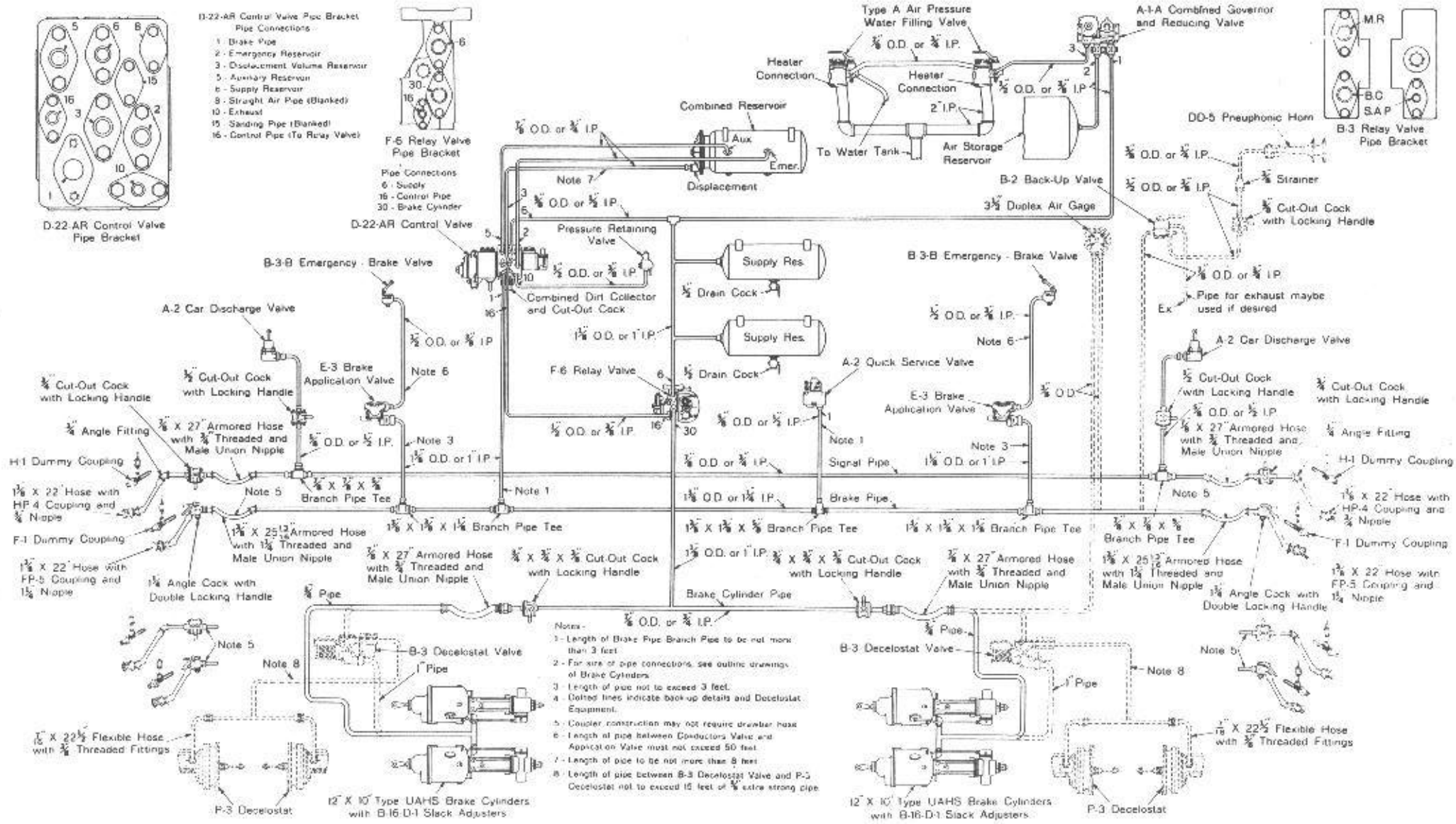

Plate 10 Piping Diagram of the D-22-AR Passenger Car Brake Equipment

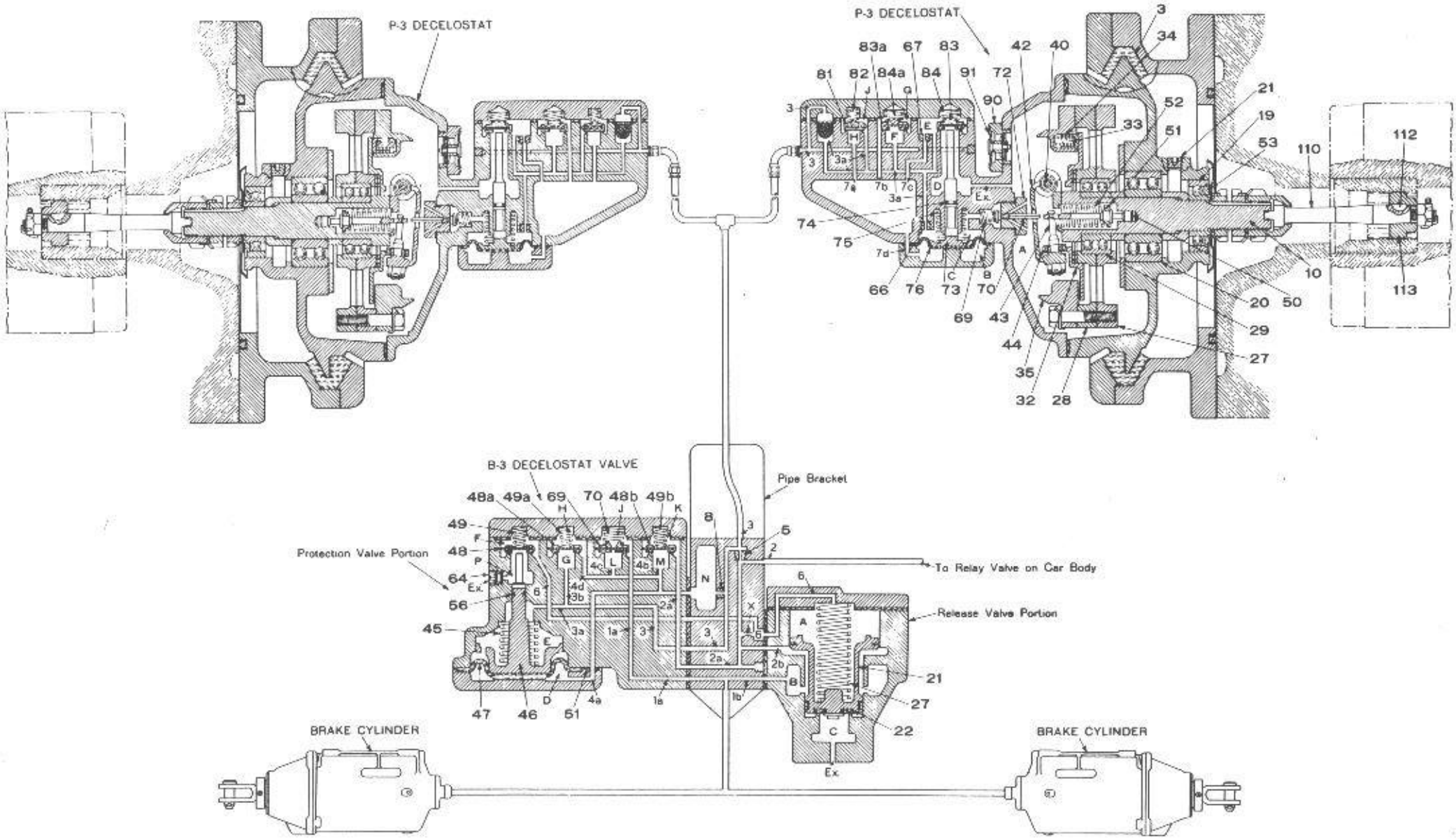

Plate 11 Diagrammatic of the No. 3-AP Decelostat Equipment