Westinghouse Traction Brake Company,

Pittsburg, Pa., U. S. A.

WORKS AT WILMERDING, PA.

OFFICES:

BOSTON,	638 Exchange Building, 53 State Street
BUFFALO,	774 Ellicott Square Building
CHICAGO,	1545 Railway Exchange Building
CINCINNATI,	1111 Traction Building
CLEVELAND,	1007 New England Building
COLUMBUS,	1132 Columbus Savings and Trust Building
DENVER,	604 Majestic Building
LOS ANGELES, CAL.	527 South Main Street
MEXICO CITY, MEXICO,	4½ Calle de San Diego
NEW YORK,	2014 Trinity Building, 111 Broadway
RICHMOND,	804 American National Bank Building
ST. LOUIS,	1932 North Broadway
ST. PAUL,	634 Endicott Building
SAN FRANCISCO,	302 Rialto Building

ASSOCIATED COMPANIES:

THE AMERICAN BRAKE COMPANY,
St. Louis, Mo.

THE WESTINGHOUSE AIR BRAKE COMPANY,
Wilmerding, Pa.

CANADIAN WESTINGHOUSE COMPANY, LTD.
Hamilton, Ontario, Canada.

SOCIÉTÉ ANONYME WESTINGHOUSE,
Paris, France.

WESTINGHOUSE AUTOMATIC AIR AND STEAM COUPLER COMPANY,
St. Louis, Mo.

THE WESTINGHOUSE BRAKE COMPANY, LTD.
London, England.
Hanover, Germany.

THE WESTINGHOUSE COMPANY, LTD.
St. Petersburg, Russia.

WESTINGHOUSE TRACTION BRAKE CO.

Instruction Pamphlet No. T 5002.

March, 1906.

(SUPERSEDING ISSUE OF JANUARY, 1904.)

Direct-Current Motor-Driven Air Compressors. Type D-EG.

Figs. 1, 2 and 3 show the construction of this type of compressor. The air is drawn through the suction screen 4 in the cylinder head, into the chamber J through chamber H (which is filled with pulled curled hair), thence by raising the two steel suction valves 1, through the ports C^1 and C^2, into the cylinders B. On the return stroke the air is forced back through the ports K and K^1, past the discharge valves 2; then the air passes into the chamber E, from which it passes to the discharge pipe D. Both the suction and discharge valves are made of drawn steel tubing, are light and easily removable. The suction valves are accessible by removing chamber caps 3; the discharge valves by removing chamber caps 26; or all four valves can be quickly and simultaneously removed for repairs or replacement by taking off the cylinder head. It will be noticed that as the valves close by gravity, there are no springs to corrode or lose their temper.

The pistons, 5, are fitted with rings 6, which have been accurately ground. When taking a pump apart, to obtain the best result upon reassembling, the rings should be kept with the piston to which they were originally

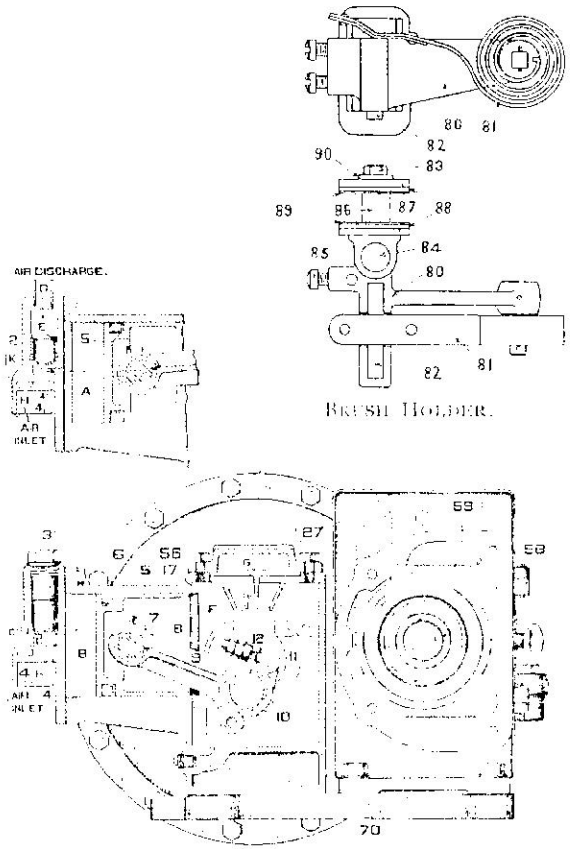

Fig. 1

MOTOR-DRIVEN AIR COMPRESSOR.
Type D—EG.

fitted. The wrist pins, 7, are of steel, hardened, ground, and secured in place by a set screw, 30; a bronze bushing 8 in the connecting rod 9 works on them. The crank end of the connecting rod is lined with genuine U. S. babbitt and has a strap 10, hinged at its lower end, and secured by an eye-bolt 11 at the upper end. On this bolt between the two parts are thin steel washers 12, which may be removed as the bearing wears, and the strap then tightened down on the remaining ones and locked with the jam nut.

The center line of the cylinder is a little above the center line of the crank shaft, so that the angularity of the connecting rod may be reduced during the period of compression, thereby reducing the vertical component of the thrust and consequently the wear on the cylinders. *The shaft must, however, always run with the compression part of the stroke on the upper half revolution, i. e., clockwise when viewed from the gear end.* The crank shaft 14 is made of heavy forged steel, and besides having ample end bearings 13 and 16 of bronze, is provided with a large babbitt lined center bearing, which is a part of the crank case cylinder casting 17.

The above parts are all lubricated from a bath of oil, poured into the dust-proof crank case through the special fitting 18, which acts as a gauge of the oil level; the fitting is closed with a suitable screw plug 19 that is secured to the crank case by means of a chain. On the overhanging end of the crank shaft is the gear wheel 20, made of semi-steel mixture in two halves and bolted together to form the well-known "herringbone" type of gear. It is forced onto the shaft over a square key and secured by the nuts 28.

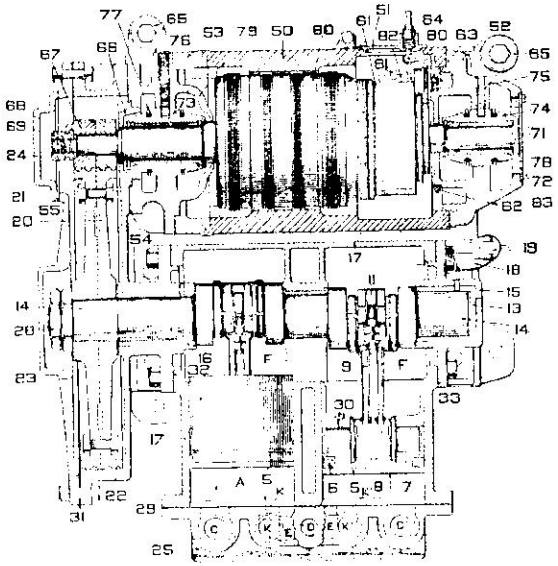

Fig. 2.

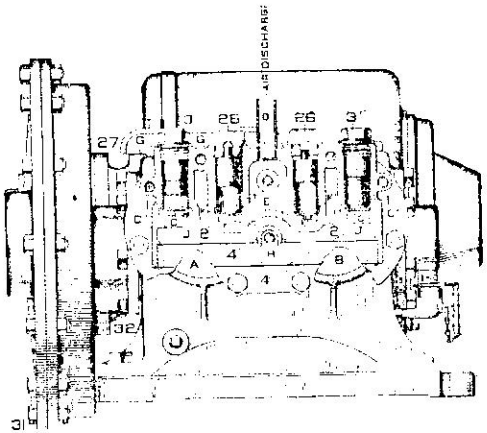

Fig. 3.

MOTOR-DRIVEN COMPRESSOR.
Type D—EG.

The **Motor** is of the series type with an unsplit, cast-steel-magnet frame 50, having a prolongation on the commutator end, provided with an opening to permit of ready access to the brushes and commutator. This opening has a door 51, hinged to the frame, which for an "outdoor" type of motor is tight-fitting, excluding rain and dust. For "indoor" or ventilated type this door has many perforations, allowing air to circulate through the commutator chamber. In the ends of the frame are centered heads, 52, 53 and 79, which carry the armature bearing at the ends of the motor; 52 and 79 are provided with an oil well with filling hole so located that it is impossible to flood the interior of the motor with oil. Cast-iron bearing shells 73 and 74, of ample proportions, with babbitt insets, are centered in the heads and secured by means of set screws 75 and 76. Each bearing has two oil rings, 77 and 78, which insures the proper lubrication of the shaft as long as any oil remains in the wells. An overflow passage, below the opening into the motor at the pinion end, leads to the bottom of the gear case, effectively preventing any of the gear-lubricating oil, which might work through the pinion bearing into its oil well, from flooding the motor.

Two of the four field poles are a part of the frame 50, the other two, 58, being made up of laminations of soft iron riveted together and bolted to the frame, thereby securing in place the field coils 59 also. These are insulated and protected from moisture in accordance with standard Westinghouse railway practice, which has also been followed in all other details of electrical construction. The armature 60 is built up of electric soft sheet-steel punchings with accurately spaced slots in which are im-

bedded form-wound coils of uniform size. The commutator 61 is of liberal length, with deep segments insulated with the best grade of mica. Special care is taken in supporting the leads from coil to segment by a wooden ring resting firmly on the commutator nut, and both insulating tape and piano wire binding, to prevent possibility of any movement that might damage them. The two brush holders 80 (Fig. 1), mounted on the adjustable cast-iron yoke 62, are of cast brass, with two tap bolts 83, threaded into a steel plug 84 in the holder, to secure them in position, and insulated from the yoke by fibre, fullerboard and mica washers 87, 88 and 89, respectively, and tubes 86, so that ample insulation has been provided at this important point. The carbon brushes 82 slide in machined ways and are held in contact with the commutator by a coiled spring 81 of bronze ribbon, thus giving a uniform tension during the life of the brush. The screws 85 are binding screws to secure the leads firmly to the brush holder. This method has long been in use on Westinghouse motors, and has given perfect satisfaction.

Each size of motor is arranged to be ventilated or dust proof according to whether it is for "indoor" or "outdoor" use, and we always recommend that the ventilated type be specified for inside work where the situation of the compressor is reasonably clean and free from dust. In the ventilated motor, besides the perforated door mentioned above, a similarly perforated plate covers an opening in the field frame directly opposite the door on the back of the motor; also on the top, just above the commutator, another opening and plate are placed; and in the larger ventilated motors, oval openings and plates are placed in the heads at the commutator end, just above and below the shaft bearings.

Since all these motor-driven compressors are primarily designed for street railway work which is intermittent in character, when they are installed for other uses, as in commercial establishments, we recommend that they do not be used for continuous operations unless the air cylinders are water-jacketed; and even then there are some conditions under which limits should be placed to the length of operation due to the temperature rise in the motors. For that reason we suggest that before definitely deciding upon the size to be used, that prospective purchasers consult with a member of our engineering department, one of which will always be found at any of our district offices. We give below a table which will serve as a guide in the use of the compressors of the ordinary railway type in ordinary commercial work, this table showing the maximum continuous run that we recommend and the least desirable interval of rest in which to cool.

Pressure.	Operation.	Rest.
200 lbs.	7 minutes.	23 minutes.
175 lbs.	7 minutes.	23 minutes.
150 lbs.	8 minutes.	22 minutes.
130 lbs.	10 minutes.	20 minutes.
100 lbs.	15 minutes.	15 minutes.
65 lbs.	15 minutes.	15 minutes.
20 lbs.	25 minutes.	5 minutes.

This table is based on a motor temperature rise of 65° C. above atmospheric temperature of 25° C.

In Street-Railway work, where the ventilation about the compressor is usually better than in stationary work, we limit the successive periods of operation and rest to *thirty minutes* each for 100 pounds main-reservoir pressure.

Motor-Driven Compressor Tests.

Compressor Test.—Each compressor is piped to two reservoirs in series, the first of which is called the *pressure reservoir* and the second the *measuring reservoir*. Between these two reservoirs, in the piping, are suitable cocks, arranged to allow the pressure in the measuring reservoir to be reduced to that of the atmosphere. That in the pressure reservoir is held so that the compressor works against it continuously, while the air is allowed to flow through it and fill the measuring reservoir to a certain pressure slightly less than that of the pressure reservoir. The time required to fill the former to this pressure is noted. The voltage is held constant to that required for the motors, and the current noted. Knowing the volume of the measuring reservoir, the displacement of the pump, the time, and number of revolutions, the theoretical and actual quantities of air pumped in cubic feet of free air per minute are easily determined, and the efficiency of the pump must exceed a fixed amount, according to the size of the compressor, before it is allowed to pass. Unless otherwise specified the pressure reservoir is held at 100 pounds. During these tests the brushes are properly set for the best commutation and the compressors are thoroughly inspected to insure their being in the best condition of operation. Records are kept, giving the serial number and size of each compressor, number of armature and field, voltage and pressure at which test was made, cylinder efficiency developed, free air per minute, cubic feet of free air per minute per electrical horse power input, speed, and average current required.

Motor Test.—Two motors, secured to the same bed plate, are united by a flexible coupling, one being run as a generator and the other as a motor. The resistance of the generator circuit is adjusted to give a certain overload to the motor, the latter being run on the constant voltage specified. After operating one-half hour in this manner the combination is reversed, the motor becoming the generator and the generator the motor during the next half hour. With motor operating at its normal input, the speed is carefully taken and must be within *five per cent.* of the specification. Finally, the load on the generator is decreased to such an amount as to raise the speed to from 1.8 to 2 times the normal, when the action of the machine is investigated with regard to open circuits that may have developed. The machines are then shut down and the maximum temperature of armature, field, and commutator obtained by thermometer. The field temperature is noted at intervals throughout the tests. The maximum final temperatures must not exceed a certain specified rise above atmospheric temperature. After the temperature tests, the 600-volt motors are tested with 2000 volts A. C., and the 110 and 220-volt motors with 1000 volts A. C. The end thrust is determined during the test above outlined, and must not exceed specified amounts, depending on the size of the motor. The latter's efficiency is determined from the watts input and output, although the test is intended primarily for speed and temperature rise.

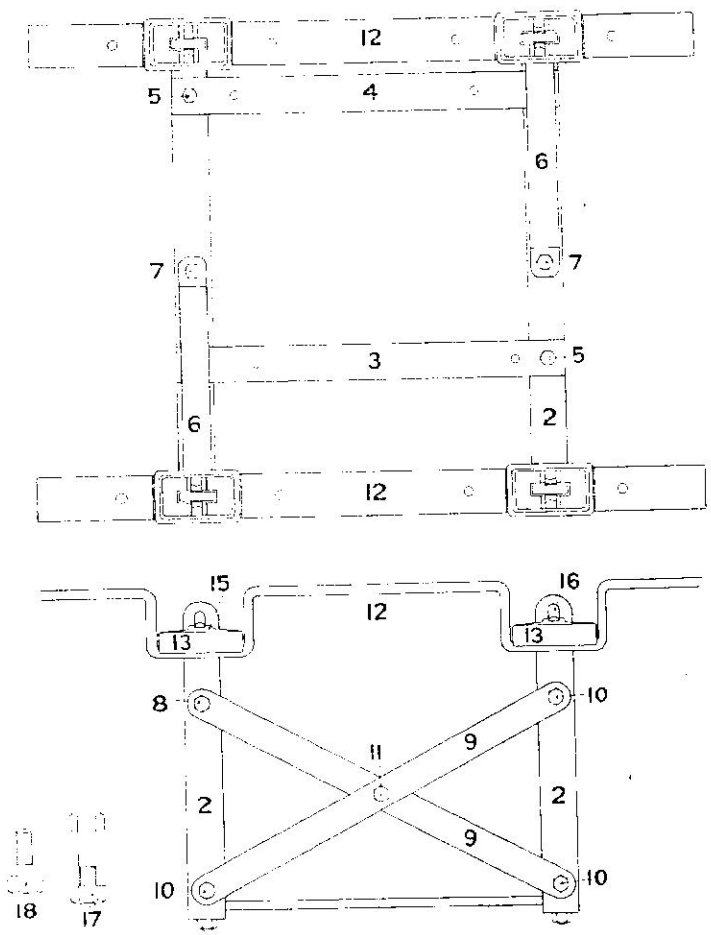

Fig. 4.

SUSPENSION CRADLE.

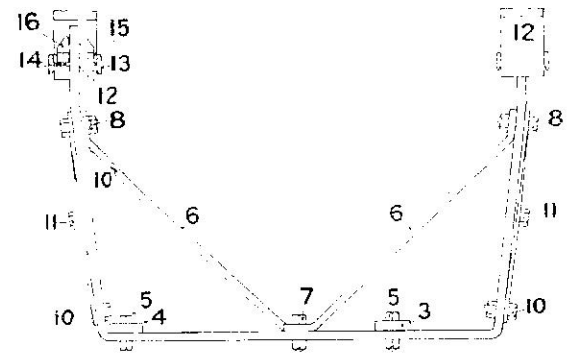

Fig. 5.

SUSPENSION CRADLE.

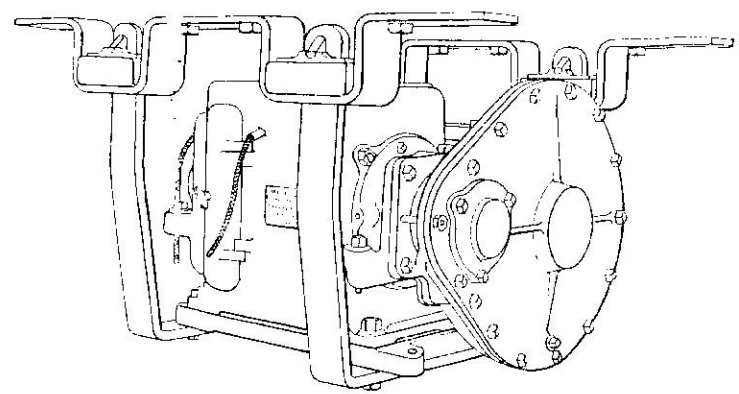

Suspension Cradle.

Our standard equipment for railway work does not include a box enclosing the compressor, since the dust and rain-proof construction of the D-type of compressor ren-

ders such a device superfluous and objectionable, a free circulation of air around the compressor cylinders being very desirable. With each compressor we furnish a suspension cradle, illustrated in Fig. 4, which combines compactness with great stability and affords ready access to all bolts and parts of the compressor requiring attention when in position under the car.

This device consists of two parts, the cradle 2 and 3, which is bolted to the base of the compressor, and thereby becomes an integral part of it, and the brackets 12, by which the above are secured to the car. The two brackets have two pockets, each containing a rubber cushion 14, fitted in an iron casing 13, with a suitable cover 15, and these parts are provided with a slot through which the ends of the cradle may pass. These ends also have slots for notched keys 16, which latter, when in place, support the cradle with its compressor and cannot work out. Thus the compressor is firmly supported on rubber cushions which prevent the vibrations from being transmitted to the car body, and at the same time, by raising the compressor one-half inch and slipping out four keys, the outfit may be removed from the car most readily.

We also supply with motor compressors a set of double end wrenches specially designed to fit the various nuts and bolts, so that there may be no excuse for battering up the latter with worn out and inconvenient monkey wrenches.

On the last page of this pamphlet is a table giving dimensions and general data referring to this type of compressors discussed above.

Choice of Compressor.—In choosing the proper size of motor driven compressor, several points should be considered, as follows:

1st. Compressors that are not water jacketed can furnish an amount of air equal to their rated capacity, when operating so that the length of time of alternately compressing and standing idle, and the time of single operation does not exceed that given on page 8.

2nd. In street railway work the size of car determines the size of brake cylinder, which, with the number of stops made in a certain length of time, will determine the amount of air used. The compressor should be chosen for the conditions requiring the most frequent stops.

3rd. The use of air whistles requires additional pump capacity in proportion to the size of whistle and the frequency with which it is used.

4th. The Westinghouse Electro-Pneumatic Multiple-Unit Control System requires a very small additional pump capacity, depending on the size of equipment and frequency of operation.

5th. Pneumatically operated doors and other such devices require additional capacity depending on the size of equipment and frequency of operation.

6th. A motor car or locomotive hauling trailers requires considerable extra pump capacity in proportion to the number of trailers handled, and the size of brake cylinders used in their equipment; also, the frequency of stops.

7th. For compressors in stationary plants the amount of air required can readily be computed from the use to which it is put, and a compressor having a minimum capacity of that amount chosen.

There is nothing gained by installing a compressor that is under size, since the extra effort required to produce the necessary capacity will cause over-heating, loss in efficiency, and probably serious damage.

Installation of the Motor-Driven Compressor.

The selection of a position for a motor compressor on a car depends largely upon the location there of other apparatus, but it is important that the position be such as to give the air suction cool, dry air. It should be where heated air from the grids, or motors, will not be drawn in. Also, the oil fitting in the compressor crank case should be easily accessible from the street. To instal the device, proceed as follows:

Secure the cradle to the base of the compressor and be sure to set the cap screws and nuts up solidly; then fasten the brackets solidly to the car framing at the proper distance apart, utilizing, if practicable, an existing timber for one of them, and putting in a suitable piece for the other. Use four ⅝″ bolts for each bracket. Do not use lag screws. If desirable the ends of the brackets may be bent up and bolted to the side of the sill. Place the boxes containing the rubber cushions in the hanger pockets and raise the compressor until the ends of the cradle pass through the cushions far enough for the keys to be put in; then lower the compressor until the cradle ends are seated in the notches of the keys.

The cover, 27, on the top of the crank case has a vent for any vapors that may be formed therein. In cases where the compressor is to operate under such conditions that vapor issuing from the crank case would be objectionable, when ordered, we furnish in place of the above mentioned cover one arranged for pipe and fittings to carry the vapors to a point away from the compressor.

In either case, this opening should never be closed or made smaller.

If the car runs in a very dusty locality, where it is found very difficult to keep the suction screen clean or the filtering material from choking rapidly, we will be glad to furnish a special plate, arranged for pipe connection, which should be bolted beneath the inlet chamber, and the suction piped to a point where cleaner and cool air may be obtained. This pipe should be as free from bends and as large as possible, certainly not less than 1¼″ for the smallest compressor. The free end of this pipe should invariably be fitted with a suction screen, either such as are furnished with locomotive air pumps, or a special curled-hair screen which we have especially designed for such use.

The following arrangement for cleaning the intake air to the compressor has been successfully adopted in some cases, and in certain classes of service will prove very satisfactory:

> Bore through the sill nearest the pump a hole of such a diameter that a threaded nipple will drive through same tightly, this hole is to be so located and the nipple of a suitable length, that when it is in place, the suction fitting may be screwed into a socket coupling on one projecting end and a pipe nut set up against the other side of the sill, thus securing both nipple and suction fitting rigidly in place. The free end of the nipple should then be piped to the suction orifice of the pump. Three sides of a box of the same depth as the sill, and about 12″ square, should be nailed to the latter and to the car flooring and

covered on its lower surface with two or three thicknesses of cheese cloth tacked to the edges in such a manner that the suction fitting will be inside of the compartment thus formed. This arrangement will amply supply the suction with free air and should be impervious to dust, but it must be located where mud will not be thrown upon it from the wheels.

The discharge orifice in the top of the cylinder head must be connected by not less than 25 feet of pipe to the main reservoir. The function of this pipe is to afford ample cooling surface to the compressed air. It should be one or two sizes larger than that for which the compressor outlet is tapped and should be placed under the car in a manner to insure proper cooling of the air. It should be low enough for a good circulation of air all around it, and should be placed along the side under the car as near the outside of the frame as practicable, where it will get the benefit of the rapidly changing air at that point, but be in no danger of striking platforms or objects in the track or street. Avoid, if possible, hanging such pipe under the car inside of the outside width of trucks, as the air at that point has comparatively little circulation.

All other connections to the main reservoir must be made at the end opposite to that at which the discharge from the pump enters, so that all air will pass through the reservoir and deposit the water that is necessarily precipitated in the cooling of compressed air, as well as any oil or dirt that may have been entrained by it.

When installing a motor-driven compressor for ordinary commercial purposes, it can be bolted to a substantial floor, set in a cement foundation, or suspended if necessary, by means of the suspension cradle illustrated in Fig. 4. It should always be placed in as cool a location as possible and where cool, clean, dry air is always available. If necessary, the air inlet should be piped to the outside atmosphere when it is the only means of obtaining such air. We do not usually recommend suspending the compressor from a point near the ceiling as the temperature of that locality is usually considerably above that which is suitable for satisfactory operation. The compressor should always be insulated from ground. The suspension cradle mentioned is constructed so that this is always effected. When otherwise installed, a piece of hard wood may be made to serve as a base plate to serve this purpose. We furnish a standard fitting for use in the piping to insulate the latter. A smaller and similar fitting can be procured for the governors also. The location of the compressor should be where it can be easily dismantled when occasion requires, and where all important parts are easily accessible.

When looking at the motor compressor from the gear end, the pump shaft should rotate clock-wise and the motor shaft in the opposite direction. To change the direction of rotation of the armature reverse the brush-holder connection.

The wiring connections should be made in accordance with the instructions on the tag accompanying each compressor. The positive side of the circuit should connect to the field lead protruding from the frame near the commutator end. The other, or brush-holder lead, connects to the negative side of the circuit. Brass terminals, with set screws, will be found attached to each lead facilitating proper connection. The set screws must be firmly set, and the whole terminal wound with insulating tape.

Inspection and Maintenance.

Cleaning and Repairing the Motor-Driven Compressor.

The caretaker should remove once a week regularly the oil plugs 19 and 65 of the compressor, Fig. 2, and replenish the oil supply, these three points being the only ones to require this attention. Use for this purpose a good quality of engine oil that will stand the high temperature obtained in the crank case when the pump is run too long continuously. We recommend Artic Ammonia oil which we know will give good results. It is not safe to use the ordinary crude oils found unpurified in the market, as their impurities will cut the cylinders, or they will not stand the high temperature without becoming too thin and bodyless. The commutator should be kept clean but not necessarily bright, a rich glossy bronze being most desirable; the brushes should be free in their holders, and the door tightly closed that dust may not penetrate to the interior of the motor; occasionally blow the carbon dust out of the motor to avoid possibility of short circuits.

The armature bearings of cast iron with genuine Babbitt metal insets should run two or three years before there is danger of the armature touching the pole pieces. As the length of time that a compressor has been in continuous service approaches the above, it should be examined at more frequent intervals, that the armature may not be permitted to get down on the field and damage or perhaps even destroy the winding.

To remove an armature, first take out the four cap screws which secure the head at the commutator end of the motor, and, after disconnecting the brush holder leads and removing the brushes, withdraw the head. Now take out the three screws which secure the cap 24, Fig. 2, on gear case; remove lock nut 69 from end of armature shaft, using the special box wrench provided for this purpose. Then unscrew the next nut 68, which at same time pulls off the pinion. As the pinion cannot move outwardly on account of the gear teeth, it is necessary that the armature should be free to move in the opposite direction before attempting to unscrew nut 68. The armature can so move when the head is removed as above indicated. When the pinion is free take it out, seeing that it does not fall into the gear case. The armature may now be withdrawn from the motor, care being taken to prevent it from dropping on the pole pieces and thereby damaging the cross connections at the end of the core.

To put in an armature, slide it carefully into the fields until the threaded end projects from the bearing, having the key uppermost. Now put in the pinion, with keyway at top, and with a small lever pry the pinion into line with the shaft. In motors of early construction it is necessary to lift the remaining oil ring by means of a scriber or similar implement passed through the pinion, and push the armature into place. Before sliding the shaft through the pinion it is necessary to place the special pinion nut in its position against the pinion with its collar within the flange on the latter by which it is drawn off when the nut is unscrewed. As the shaft is pushed through the pinion, the nut must be turned until the former is pressed firmly to its bearing, then it must be

locked with the additional nut provided for that purpose. Put back the head with the commutator bearing, having, in the case of the older machines, removed the plate 71 at the end to admit of lifting the oil rings, and bolt in place. Make the electrical connections as before and replace the brushes exactly as they were before, in order that the bearing between brushes and commutator may not be destroyed. While the pinion hole in gear case cover is still open, turn the armature by hand to make sure that the gears run freely, then replace pinion cover and run by power for the time necessary to pump up the pressure in the reservoir.

The motor cradle is so designed that the above operations may be readily performed with the compressor in place under the car, and either operation can be performed in a very short time by a man who is provided with our regular set of wrenches and has become accustomed to the work.

To remove a field coil the compressor should be taken from the car, and as this operation is so easily performed with our method of suspension when the pit is equipped with a suitable jack, we strongly recommend that railroads using our equipment provide themselves with one or more extra compressors, that a defective one may be promptly replaced and the repairs made at the bench in the day time to far better advantage than is possible under the cars at night.

With such an equipment all but the very minor repairs can be profitably handled in this way, and with the cars in the barn a minimum length of time.

Clean the suction strainer once a week when oiling, for if it is permitted to become choked with dirt the efficiency of the compressor is greatly reduced.

Every six months the oil should be drained from the various receptacles by means of the orifices provided for this purpose, and all grit and foreign matter rinsed out with gasoline. Then refill with clean oil. At the same time remove the valves and clean them and their cavities with gasoline.

If a pounding develops in the compressor remove the crank-case cover and close the crank bearings of the connecting rods by removing some of the washers provided for this purpose. Never leave an unfilled gap between the two parts of the rod, as in that case the strap would be loose on the rod when the lining became a little worn. Be sure to tighten the lock nuts and replace the cotter pins.

To get at the piston packing rings or wrist pin it is necessary to detach the connecting rod from the crank shaft, and after removing the cylinder head, draw the piston out.

The best results are obtained with a lift of suction valve of $\frac{3}{32}''$, and $\frac{1}{8}''$ for the discharge for D-1, D-2 and D-3-EG compressors; $\frac{3}{16}''$ lift of suction and $\frac{3}{32}''$ of discharge valve for D-4-EG compressor. It is well, therefore, not to permit pumps to run with a much greater lift than the above.

If a given compressor blows its fuse (a Noark of capacity called for in table on page 23) frequently, and the motor is found to be in good order, it may be assumed that the pump is not working freely. Examination will probably show that the discharge valves are sticking, or that there is undue friction of the pistons in their cylinders due to lack of proper lubrication, or a bearing may be running hot for lack of oil. Something certainly will

be found wrong, and under no circumstances should the car be sent out with a heavier fuse in the block; such a practice is almost sure to result in burning out the motor.

We decline to assume any responsibility for damage that may occur to compressors which have not been properly lubricated.

Data Regarding the Form D-EG Westinghouse Motor-Driven Air Compressors.

Symbol	Bore and Stroke Cylinder	Teeth: Gear	Teeth: Piston	Speed in R.P.M.: Armature	Speed in R.P.M.: Pump Shaft	Displacement Cu. Ft. per Rev.	Displacement Cubic Ft. of Free Air per Min.	Per Cent. Cyl. Efficy.	Cu. Ft. Free Air Actually Del'd per Minute	F. H. P. Input 100 lbs.	M. H. P. at 100 lbs.
D-1—EG,	5 x3	126	20	1350	214	.0681	14.57	74.40	10.82	3.54	2.62
D-2—EG,	5 x4¼	72	13	1200	217	.1168	25.3	84.80	20.5	6.35	4.9
D-3—EG,	7 x5	77	15	830	162	.2223	36.	89.87	32.4	8.46	6.7
D-4—EG,	7 x5	85	14	1110	183	.2730	50.	92.52	46.2	12.85	9.4

Symbol	Volts	Amperes: Actual	Amperes: Fuse	Dimensions, Inches: Length	Dimensions, Inches: Width	Dimensions, Inches: Height	Weight, Pounds: Bed-Plate and Pump	Weight, Pounds: Motor	Weight, Pounds: Total	Weight, Pounds: Shipping
D-1—EG,	600	4.4	5	24.75	23.44	17.81	358	290	648	760
D-2—EG,	600	7.9	10	30.28	27.37	20.87	469	441	915	1075
D-3—EG,	600	10.5	15	33.12	28.78	22.25	640	565	1205	1395
D-4—EG,	600	16.	20	34.69	30.56	23.75	705	642	1347	1540

NOTE—D-1-EG and D-2-EG pumps have ¾ inch discharge; D-3-EG and D-4-EG pumps have 1 inch discharge.

NOTE—When arranged for piped suction D-1-EG pumps are fitted for 1 inch pipe; D-2-EG for 1¼ inch; D-3-EG and D-4-EG for 1½ inch.

All above motors can also be furnished for 110 and 220 volts direct current. For single or polyphase motors, or water-jacketed air compressors, refer to our engineering department.