PHYSICAL SCHEMATIC WIRING DIAGRAM

UNITS 3041 — 3135
CLASS DRS—20d,e
UNITS WITH QEG

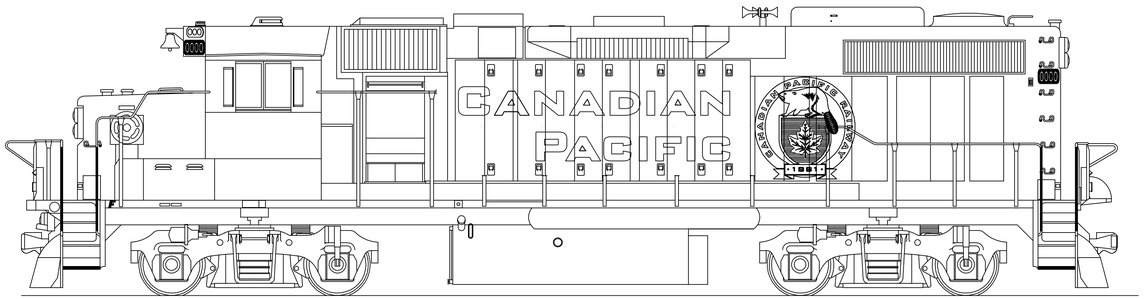

ISSUED BY V.P.M.S.
JULY 1998

CP DWG. NO. A-62-D-308
SHEETS 10 TO 710

DESCRIPTION	SHT NO
INDEX	10
NOTES & GENERAL ARRANGEMENTS	20
LOCATOR CHARTS–MODULES & SWITCHES	30
LOCATOR CHARTS–INTERLOCKS	40
LOCATOR CHARTS–INTERLOCKS	50
LOCATOR CHARTS–INTERLOCKS	60
LOCATOR CHARTS–CA,CR,RE,RH & MISC	70
LOCATOR CHARTS–CA,CR,RE,RH,MISC & CB	80
EQUIPMENT LOCATOR–ELECTRICAL CABINET	90
EQUIPMENT LOCATOR–ELECTRICAL CABINET	100
EQUIPMENT LOCATOR–ELECTRICAL CABINET	110
EQUIPMENT LOCATOR–ELECTRICAL CABINET	120
EQUIPMENT LOCATOR–CONTROL STAND	130
EQUIPMENT LOCATOR–AC CABINET	140
SETTING CHARTS	150
SETTING CHARTS	160
SPARE TRAINLINES & WIRES	170
HIGH VOLTAGE	180
HIGH VOLTAGE	190
AC POWER	200
MODULE POWER SUPPLY	210
GEN. SENSOR BYPASS & PERFORMANCE CONTROL CIRCUIT	220
BN STRING,BATTERIES,FUSE TEST & STARTING	230
SPEED INDICATOR (WITH ISOLATION BOX) & TOILET	240
RADIO, CLU, IDU, & POWER MONITOR	250
HEADLIGHTS CIRCUIT	260
TRANSFER SWS, DITCH LTS & SNPL HDLT	270
FUEL PUMP, REFRIDGERATOR, W/D HTRS & AIR DRYERS	280
CAB HTRS.,AUX CAB HTRS AND HOT PLATE	290
AUX GEN & ALTERNATOR	300
LIGHTING–LP & LN STRINGS	310
LIGHTING GENERAL	320
LIGHTING GENERAL	330
PA & NA STRINGS	340
PM & NM STRINGS	350
ENGINE STOP/START	360
ENGINE STOP/START	370
MOTOR CONNECT CONTROL	380
ENG COOLING, GRID PROTECT. CONTROLS & POWER PROTECT.	390
T/M CUTOUT CONTROL	400
PROTECTION	410
13T,PT & N STRING	420
QEG POWER STRING	430
ENG RUN, ALARM, GRD RLY & COMP.SYNC.CONTROL	440
SANDING CONTROL	450
PC RESET & GEN FLD CONTROL	460
WHEEL SLIP, GRD RELAY RESET & IND LT PANEL	470
ENGINE GOVERNOR CONTROL	480
ENGINE GOVERNOR CONTROL	490
DYMANIC BRAKE & DIRECTION	500
EVENT RECORDER – P14, P15, & P17A	510
EVENT RECORDER – P16, P17B, P18, P19, P20	520
EVENT RECORDER – P21 & P22	530
CONDUIT DIAGRAM LEGEND	540
SHORT HOOD	550
CAB	560
LONG HOOD – MIDDLE	570
LONG HOOD – NO 2 END	580
SHORT HOOD & CAB – EVENT RECORDER	590
TERMINAL BOARD DUCT – ELECTRICAL CABINET	600
TERMINAL BOARD DUCT – ELECTRICAL CABINET	610
TERMINAL BOARDS – MAIN CNTRL PNL – ELECTRICAL CBNT	620
TERMINAL BOARDS – MAIN CNTRL PNL – ELECTRICAL CBNT	630
TERMINAL BOARDS – CONTROL STAND	640
TERMINAL BOARDS – CONTROL STAND	650
TERMINAL BOARDS – MISC.(CAB & SHORT HOOD)	660
TERMINAL BOARDS – MISC.(SB BS & ABV MAIN CNTRL PNL)	670
TERMINAL BOARDS – JUNCTION BOX 20	680
TERMINAL BOARDS – AC CABINET & LONG HOOD NOSE)	690
APPLICABLE MODS (ELECTRICAL)	700
	710
	720
	730
	740
	750

APP. BY	REV. BY	REV.	DATE	DESCRIPTION
K.JL	GMP	A	98–06–08	DRAWING REVISED AS PER MARKUP SUPPLIED BY W.JANSEN ODDEN SHOP.

GP38–2 C–456
ROAD NUMBERS 3041–3085 LEADERS
LOCOMOTIVE CLASSIFICATION: DRS–20d

GP38–2 C–462
ROAD NUMBERS 3086–3135 LEADERS
LOCOMOTIVE CLASSIFICATION: DRS–20e

PHYS SCHEM WIRING DIAGRAM

DRAWN: G. PRICE
DATE: SEPT. 1997
CHECKED: K.LOPRESTI
DATE: JAN. 1998
DESIGN CHK K.JL
DESIGN APP'D K.JL
APP'D: R.PARENT

SCALE | WEIGHT | REFERENCE GM 10533837 & 10538077

CANADIAN PACIFIC RAILWAY
MECHANICAL DEPARTMENT CALGARY,ALBERTA

62–D–308 | SIZE | FRAME | REV. A

INDEX

SHT. 10 OF 700

ROOM 507

GENERAL ARRANGEMENT

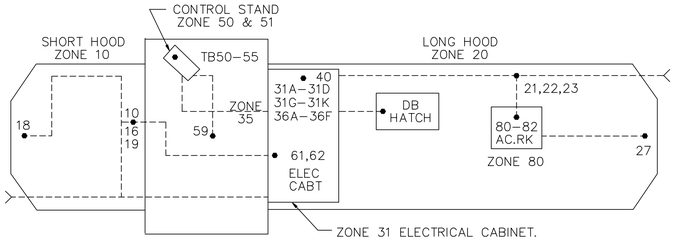

ZONE 31 ELECTRICAL CABINET.
ZONE 33 MODULES.
ZONE 36 MAIN CONTROL PANEL.
ZONE 37 CB & TEST PANEL.
ZONE 37 FUSE & SW PANEL.
ZONE 38 CB & RESISTORS.
ZONE 39 ENGINE CONTROL PANEL.

EQUIPMENT LOCATOR CHARTS

RELAYS & CONTACTORS

	INTERLOCKS					ITEM	COIL	MAIN	ZONE
N.O.	3			GH	EF	FPC	230E	200A	36
	20C								
N.C.	3			CD	AB		300C		
	X				230D				

"X" INDICATES NOT AVAILABLE.
AVAILABLE.
USED INTERLOCKS.
LOCATION ON LOCO.
MAIN CONTACTS OR THRU CABLE DEVICE.
OPERATING OR RECALIB COILS.

NO	CA	ZONE	CR A	CR B	CR C	CR D	ZONE	RE A	RE B	RE C	ZONE
1	180G	36	330H				38	220E	220E	X	31
2			340F	120D	X	X	31	210G			31

NUMBER INDICATES LOCATION ON DWG.
LETTER USED ONLY IF STACKED ASSEM.
"X" INDICATES ELEMENT AVAILABLE.

WIRING NOMENCLATURE

THIS DIAGRAM SHOWS THE GENERAL LOCATION OF THE ELECRICAL EQUIPMENT, CONDUIT WIRE MARKERS, RESISTOR & RECTIFIER MOUNTING INFORMATION & THE EXACT STUD LOCATION OF WIRES CONNECTED TO TERMINAL BOARDS.

WIRE TAGS IN PARENTHESIS ARE NOT TAGGED.

TRAINLINE WIRES ARE DESIGNATED BY A NUMBER FOLLOWED BY THE LETTER "T", USING THE RECEPTACLE PIN AS THE NUMBER 1=1T, 2=2T, 3=3T ETC.

THE ASSOCIATE CIRCUITS OF THE TRAINLINE WIRES ALSO USE THE SAME NUMBERS 13T, 13A, 13B, 13C, ETC.

13 INDICATES RECEPTACLE PIN 13.

31A 7 — OPEN SYMBOL INDICATES INTERNAL CONNECTION OF THRU-TYPE FASTON TERMINAL BOARD #31A, TERMINAL #7 FROM THE TOP.
CLOSED SYMBOL INDICATES EXTERNAL CONNECTION OF THRU-TYPE FASTON TERMINAL BOARD #31A, TERMINAL #7 FROM THE TOP.

31G R1 L1 — OPEN SYMBOL INDICATES INTERNAL CONNECTION OF THRU-TYPE STUD TERMINAL BOARD #31G RIGHT SIDE 1ST TERMINAL FROM THE TOP.
CLOSED SYMBOL INDICATES EXTERNAL CONNECTION OF THRU-TYPE STUD TERMINAL BOARD #31G LEFT SIDE 1ST TERMINAL FROM THE TOP.

51R6 — INDICATES FASTON TERMINAL BOARD #51 RIGHT SIDE 6TH TERMINAL FROM THE TOP.

INDICATES STUD TERMINAL BOARD.

INDICATES SPLICE.

6B, 6B1, 6B2 — SLANT INDICATES DIRECTION.

RE6A XX? L — RESISTOR WITH LETTER AFTER NUMBER INDICATES STACKED TUBE, "A" INDICATES TUBE CLOSEST TO PANEL. L=LEFT T=TOP F=FRONT INDICATES POSITION OF TUBE.

CR30 — INDICATES RECTIFIER (IF STACKED CR30A CLOSEST TO PANEL).

CA51 — RED TERMINAL

INDICATES CAPACITOR & VALUE IN MICROFARADS.

(XXX MFD)

A1 A2 A3 — WHEN RESISTORS ARE IN TANDEM "A1" RESISTOR IS TO THE LEFT, TOP, OR FRONT

INDICATES OVER LAPPING-INTERLOCKS.

NA NX — INDICATES "STRING" REFERENCE LINE. REFER TO STRING FOR DETAILED CONNECTIONS.

7 — INDICATES MODULE TEST POINT ONLY.

7 — INDICATES MODULE DISCONNECT.

7 — INDICATES MODULE DISCONNECT WITH TEST POINT.

TP4 — INDICATES TEST POINT ON TEST PANEL.

INDICATES LATCHING TYPE RELAY COIL.

L

Q — INDICATES DEVICE CONTAINING SYMBOLIC CIRCUITS. (SEE DEVICE DRAWING FOR DETAIL)
TRANSISTORIZED CIRCUIT INCLUDES DIODES, TRANSISTORS, CAPACITORS, ZENERS, RESISTORS, ETC.

INDICATES STANDOFF INSULATOR.

ROOM 507

A B C D E F G H I J

33

MODULE LEGEND & LOCATOR CHART

NAME	FUNCTION	LOCATION							
AN19	ANNUNCIATOR	410							
EL11	EXCITATION LIMIT CONTROL	210	410						
FP21	FEEDBACK & PERFORMANCE	220							
GV12	GENERATOR VOLT REGULATOR	210	220						
GX2	GENERATOR EXCIT REGULATOR	210	220						
SA10	SAND CONTROL	450							
SE13	SENSOR	180	200	210	220				
VR15	VOLTAGE REGULATOR	300							
MCU	MAIN CONTROL UNIT – QEG	180	220	230	240	340	390	400	410
		420	440	430	450	460	470	480	490
		500							
ACU	ACTUATOR CONTROL UNIT – QEG	280	340	370	420	430	490		
MGA	MAIN GENERATOR CURRENT MODULE	180							
HVM	HIGH VOLTAGE MODULE	180							
LOCO TYPE PANEL	LOCO TYPE PANEL	220	350						

RHS (REMOTE HEADLIGHT SW)

39

POS	FUNCTION	CONNECTION			
1	SINGLE UNIT OR INTERMEDIATE UNIT	5–1	10–6	15–11	20–16
2	CONTROLLING WITH UNIT COUPLED AT HOOD END	5–2	10–7	15–12	20–17
3	CONTROLLING WITH UNIT COUPLED AT CAB END	5–3	10–8	15–13	20–18
4	CONTROLLED FROM ANOTHER UNIT COUPLED AT EITHER END	5–4	10–9	15–14	20–19

TEST SWITCH

33

LOC	TERM	POSITION		
		CKT CHECK	NORM	LOAD TEST
460	1–2			●
460	1–3		●	
390	4–5			●
390	4–6		●	
380	7–8	●		●
380	7–9	●	●	
200	10–11			●
200	10–13		●	
200	12–13	●		
200	14–15			●
200	14–17		●	
200	16–17	●		

FP/ES

20

LOC	SW	POSITION		
		OFF	PRIME	ST
280	1–2		●	●
	3–4	●		
280	5–6	●		
370	7–8			●
360	9–10			●

IS

39

LOC	SW	POSITION	
		ST	RUN
370	A–B	●	
480	C–D		●
460	E–F		●
380	G–H		●
440	J–K		●
460	L–M		●
370	N–P		●
400	Q–R	●	
380	S–T		●

BKS

50

LOC	SWS		POSITION		
			OFF	BRAKE SET–UP	MIN–MAX BRAKE
500	BG	A–B			●
500		C–D			●
500	B	A–B	●		
500		C–D		●	●

RHS

50

LOC	SWS		POS	
			FOR	OFF	REV
500	R	A–B			●
500		C–D			●
500	F	A–B	●		
500		C–D	●		

THS

50

LOC	SWS		POSITION								
			STOP	IDLE	1	2	3	4	5	6	7	8
490	1 THRU 8	A–B	●	●								
460		C–D			●	●	●	●	●	●	●	●
500	IDLE	A–B		●								
460		C–D		●								
480	STOP 5,6	A–B	●						●	●		
480		C–D	●						●	●		
490	3 THRU 8	C–D						●	●	●	●	●
490	5 THRU 8	A–B	●	●	●	●	●	●				
490		C–D							●	●	●	●
490	2,4,6,8	C–D				●		●		●		●

SW MCO SEL

39

LOC	SECTION	TERM	POSITION				
			1	2	N (OFF)	3	4
	2	H–D			●		
380	3	H–D			●		
400	4	H–C	●	●		●	●
210	5	H–A	●	●	●		
		H–D			●	●	●
210	6	H–D		●	●	●	
		H–G	●		●		
400	7	H–B	●				
		H–C		●			
		H–D			●		
		H–E				●	
		H–F					●
460	8	E–D			●		
		E–F				●	
		F–G					●
		C–D		●			
		C–B	●				
400	AUX	1–2	AUX INTERLOCKS 1–2 & 3–4 CLOSE WHEN HANDLE IS DEPRESSED AND REMAIN CLOSED BETWEEN POS.				
		3–4					
400	SOLENOID	COIL					

SW HDLT BK & FR

51

LOC	LOC	SWS	POSITION			
			OFF	DIM	MED	BRT
260	260	L–1		●		
260	260	L–2			●	
260	260	L–3				●

ROOM 507

INTERLOCKS										ITEM	COIL	MAIN	ZONE
							3	2	1	ASR	480		36
							3	2	1				
							480	440	360				
								G–H	E–F	B	380	190	31
								500	380				
								C D	A B				
								380	210				
		H	G	F	E	D	C	B	A	BR1	500		36
		220	180	380			180						
						M	L	K	J				
						220							
		H	G	F	E	D	C	B	A	BR2	500		36
						270	460	380	460				
						M	L	K	J				
						380	380	270	460				
							3	2	1	CCR	440		36
									280				
							3	2	1				
									X				
							3	2	1	CDR	380		36
							380	380	380				
							3	2	1				
							X	X	X				
										CHC	460	290	31
							D	B	A	CLOP	390		36
							460		440				
							F	E	C				
							480	400	390				
								4–6	3–5	CLOPTD	390		36
									390				
								6–2	5–1				
								2	1	DBWR	500		
									500				
								2	1				
								2	1	EQP	410		36
									460				
								2	1				
								380	X				

INTERLOCKS										ITEM	COIL	MAIN	ZONE
						E	D	B	A	ER	440		36
							490	490	490				
								F	C				
									440				
								2	1	ESR	360		36
								440	440				
								2	1				
								X	X				
								G–H	C–D	FC1	390	200	80
								E–F	A–B			200	
								390	390				
								G–H	C–D	FC2	390	200	80
								E–F	A–B			200	
								390	390				
								2	1	FDR	440		36
									X				
								2	1				
									440				
					E	D	C	B	A	FOR	500		36
						460		270	380				
							H	G	F				
							270	380	460				
								2	1	FPC	280		80
								280	280				
								2	1				
								X	X				
					E	D	C	B	A	FPCR	360		36
						440		280	360				
									F				
									480				
								2	1	FPR	460		36
								280	370				
								2	1				
								X	X				
								2	1	FPSR	280		36
									360				
								2	1				
									X				
								C–D	A–B	GFA	380	200	31
								G–H	E–F			200	
									380				

ROOM 507

INTERLOCKS										ITEM	COIL	MAIN	ZONE
								C–D	A–B	GFC	460	200	31
								380					
								G–H	E–F			200	
									480				
								C–D	A–B	GFD	380	200	31
									410				
								G–H	E–F			200	
						E	D	B	A	GFX	380		36
						480		220	390				
								F	C				
									410				
						G–H	E–F	C–D	A–B	GR	180		36
						390	470	410					
								Q–R	J–K		470		
								440	380				
							3	2	1	HER	440		36
							410	440	490				
							3	2	1				
							X	X	X				
								2	1	LOTR	360		81
								360	360				
								2	1				
								X	X				
							G–H	E–F	C–D	LTT	390	180	31
							390	460					
									A–B			190	
									380				
							N–P	C–D	A–B	MB	270		31
							380	180	380				
							Q–R	G–H	E–F				
							380	380	380				
										MB/L1		180	31
										MB/L2			
										MB/R1			

INTERLOCKS										ITEM	COIL	MAIN	ZONE
										MB/L3		190	31
										MB/R2			
										MB/R2			
								2	1	MCOX	400		36
								400	270				
								2	1				
								X	270				
		H	G	F	E	D	C	B	A	MR	460		36
				480				380					
					N	M	L	K	J				
									500				
									G–H	NVR	210		36
									380				
							E–F	C–D	A–B				
							360	360	460				
								2	1	NVRA	380		36
								X	440				
								2	1				
								360	X				
						E	D	B	A	PCR	460		36
							500	460	460				
								F	C				
								380	460				
								G–H	E–F	P1	380	180	31
								460					
								C–D	A–B				
								380					
								G–H	E–F	P2	380	190	31
								460					
								C–D	A–B				
								380					
								G–H	E–F	P3	380	180	31
								460	380				
								C–D	A–B				
								380					
								G–H	E–F	P4	380	190	31
								460					
								C–D	A–B				
								380					

ROOM 507

INTERLOCKS										ITEM	COIL	MAIN	ZONE
								2	1	RAD	370		36
								X	X				
								2	1				
								250	250				
					E	D	C	B	A	RER	500		36
						460		270	380				
							H	G	F				
							270	380	460				
							Q–R	G–H	E–F	RV	270		31
							460	450	380				
							N–P	C–D	A–B				
							460	400	380				
								2	1	RVF	400		36
									270				
								2	1				
									270				
									B	RV1/L2 (MCO)	400	180	31
									400				
									A				
									380				
									B	RV2/R1 (MCO)	400	190	31
									400				
									A				
									380				
									B	RV3/L1 (MCO)	400	180	31
									400				
									A				
									380				
									B	RV4/L3 (MCO)	400	190	31
									400				
									A				
									380				
										ST	230	230	31
												230	
							E–F	C–D	A–B	STA	370	230	31
							230	230	370				
									G–H			230	
									400				
							3	2	1	STR	370		36
									370				
							3	2	1				
								2–6	1–5	TDLO	360		81
								X	X				
								4–6	3–5				
								360	360				

INTERLOCKS										ITEM	COIL	MAIN	ZONE
								2	1	TOR	370		36
								370	X				
								2	1				
								370	370				
								2	1	TPR	360		
								360	X				
								2	1				
								X	360				
					F	E	D	C	B	A	TSR	380		36
					400			390	270	270			
									2	1	WSR	470		36
									X	470			
									2	1			
									470	X			
									2	1	WOR	400		36
									410				
									2	1			
									410	220			

NO	CA	ZONE	CR A	CR B	CR C	CR D	ZONE	RE A	RE B	RE C	ZONE	RH	ZONE
1			180				36	200	200		31		
2			180				36	200			31		
3			180				36	180	180	180	36		
4			180				36				36		
5								440			36		
6								210			36		
7											36		
8								300			31		
9			440				36						
10			440				36	260	260		10		
11							36	230			31		
12								230			31		
13							36						
14													
15													
16													
17													
18													
19													
20							36	260	260		20		
21							36						
22							36						
23							36						
24							36						
25							36						
26							36						
27							36						
28							36						
29							36						
30	380	31											
31	380	36	480				36	380			36		
32	200	31					36	200			31		
33	380	36					36	380			36		
34			440				36	400			36		
35	400	36	360				36	400			36		
36	400	36									36		
37	460	36					36				36		
38							36	410			36		
39							36	180			36		
40			480				36						
41							36	460			36		
42	410	36						370			36		
43							36						
44							36						
45							36						
46			480				36	190			36		
47							36						
48			400				36						

NO	CA	ZONE	CR A	CR B	CR C	CR D	ZONE	RE A	RE B	RE C	ZONE	RH	ZONE
49			480				36						
50								330			50	500	50
51								460			51	330	51
52	500	51	450				51						
53													
54													
55			450				36						
56			450				36						
57													
58													
59-1								330	330		51		
59-2								330	330		51		
59-3								330	330		51		
60			470				36						
61													
62													
63													
64													
65			440				36						
66													
67													
68													
69													
70			190				36						
71			190				36						
72													
73													
74													
75								280			10		
76			490				36						
77													
78													
79													
80													
81													
82													
83													
84													
85													
86													
87													
89													
90													
91													
92													
93													
94													
AS			280										

LOCATOR CHARTS – CA,CR,RE & RH

62-D-308 REV A SHT. 70 OF 700

ROOM 507

CB		ZONE
ITEM	LOC	
AC CONTROL	200	38
AIR DRYER	280	38
AUX CAB HTR-L	290	38
AUX CAB HTR-R	290	38
AUX GEN FLD	300	38
AUX GEN	300	37
BATTERY CHG	230	37
BRK TR CONT	270	38
CAB HTR ENGR	290	37
CAB HTR HLPR	290	37
CONTROL	420	38
DITCHLIGHTS	270	38
DYN BRAKE	500	51
FILTER MOTOR	200	37
FUEL PUMP	280	38
GEN FLD	200	37
HEADLIGHTS	260	38
LOCAL CONTROL	340	38
LIGHTS	310	38
MODULES	350	38
MR DR HTR	270	38
RADIO	250	38
REFRIGERATOR	280	38
REV CONTROL	270	38
SNOWPLOW HDLT	270	38
SPEED IND	240	38
QEG	360	38
TOILET	240	38
W/D DEF	280	38

MISC					
ITEM	LOC	ZONE	ITEM	LOC	ZONE
ACT1	180	31	RE DB	500	50
ACT2	190	31			
ACT3	180	31	REGRID A	190	20
ACT4	190	31	REGRID A	190	20
AGR	470	36	REGRID B	190	20
ALT	200 300	20	REGRID B	190	20
			REGRID C	190	20
			REGRID C	190	20
BATT	230	10	REGRID D	190	20
BC ASM	230 280 300	31	REGRID D	190	20
			SCR	200	31
BKBL	190	20	SM1	230	20
			SM2	230	20
ELT	200 210 410	31			
			TM1	180	10
			TM2	190	10
			TM3	180	20
FCT	200 210 410	31	TM4	190	20
FILTER BLOWER MTR	200	80	WST12	180 190 210	31
			WST14	180 190 210	31
GEN AUX	300	20			
GEN MAIN	180 200 220 300	20	WST23	180 190 210	31
GPT 1	220	31	WST34	180 190 210	31
GPT 2	220	31			
MV1	450	10			
MV2	450	20			
MV818	440	20			
MV-AS	450	10			
MVCC	440	20			
MV-DBI	500	10			
MVOS	240	10			
MVSH	390	20			
PCS	460	10			
RAD BLWR MTR	200	80			

SWITCHES					
ITEM	LOC	ZONE	ITEM	LOC	ZONE
ALARM SIL	370	39	NO LTS BK	320	39
ATT CALL	440	51	NO LTS FR	320	39
AUX CAB HTR L	290	10			
AUX CAB HTR R	290	51	OVERRIDE	520	10
BAIL	510	51	PCS	460	10
BATTERY	230	51	PLATFORM LTS	320	39
BKS B	500	50	POWER RED	460	51
BKS BG	500	50			
			RADIO	250	37
CCS	440	20	RHS (HEADLIGHT)	260	39
CLOPS	390	20	RHS (REV)	500	50
CONT & FUEL PUMP	420	51			
			ST MTR TH OL	230	31
DBCO	380	39	STEP & GRD LTS	330	51
DBS	500	10			
DLS	270	51	TEST	200	37
			THS (THROTTLE)	30	50
EFCO	30	20			
			W/D DEF	280	51
ELECT CABT LTS	510	51			
EMERGENCY	510	51			
ENG RM LTS	320	39			
ENG RUN	440	51			
EQ RES	510	51			
FP/ES	30	20			
FUSE TEST	230	37			
FVS	410	31			
GAUGE LTS	330	51			
GEN FLD	460	51			
GR CO	180	38			
GRD/F RESET	470	38			
HDLT BK	260	51			
HDLT FRT	260	51			
HORN					
IS	30	39			
LEAD TRK SAND	450	51			
LO START/STOP	360	81			
MAN RESET	510	10			
MAN SAND	450	51			
MCO SEL	30	39			

ROOM 507

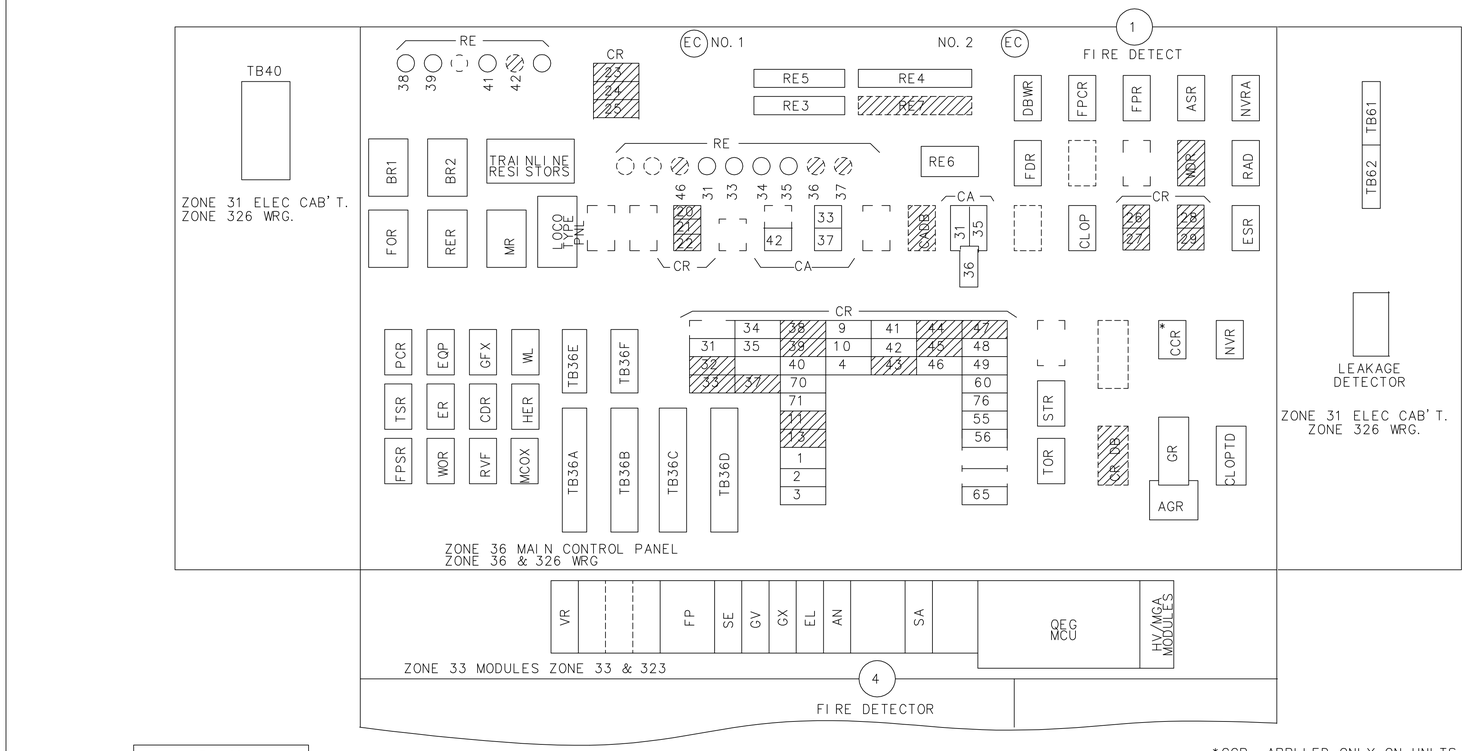

"TOP" OF FRONT VIEW (CAB SIDE)
ELECTRICAL CABINET

*CCR- APPLIED ONLY ON UNITS;
ROAD NOS. 3041-3063 AND
3086-3110

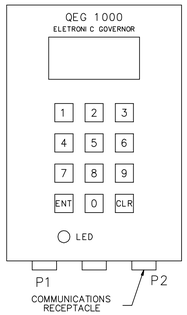

LEFT RELAY PANEL DOOR
MMI

EQUIPMENT LOCATOR – ELECTRICAL CABINET | 62-D-308 | REV A | SHT. 090 OF 700

ROOM 507

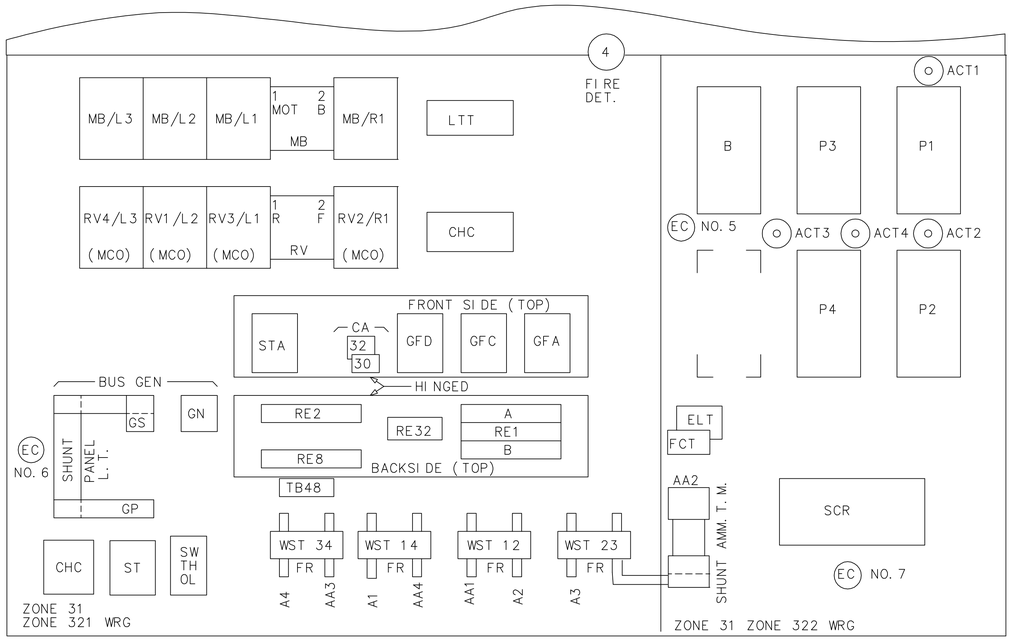

"BOTTOM" OF FRONT VIEW (CAB SIDE)
ELECTRICAL CABINET

EQUIPMENT LOCATOR – ELECTRICAL CABINET | 62-D-308 | REV A | SHT. 100 OF 700

ROOM 507

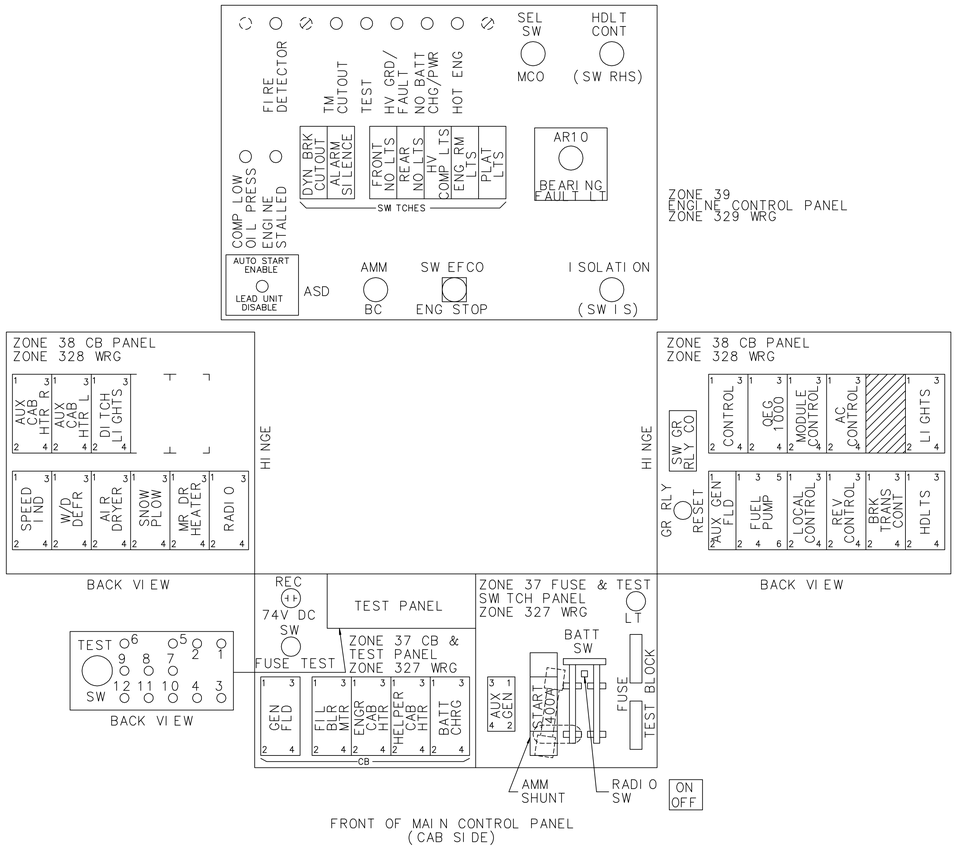

EQUIPMENT LOCATOR – ELECTRICAL CABINET | 62-D-308 | REV A | SHT. 110 OF 700

ROOM 507

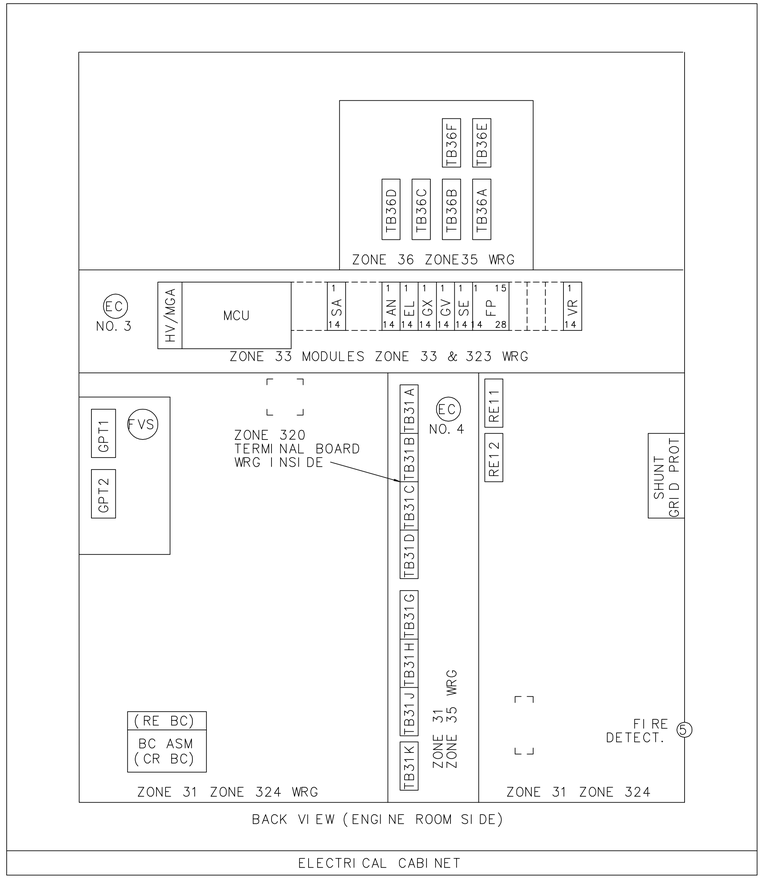

EQUIPMENT LOCATOR – ELECTRICAL CABINET | 62-D-308 | REV A | SHT. 120 OF 700

ROOM 507

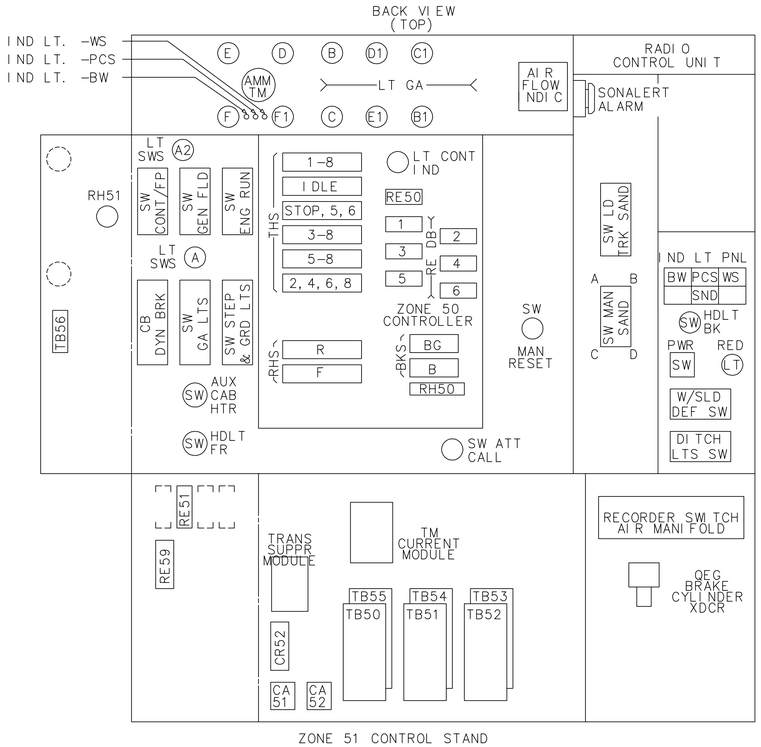

ZONE 51 CONTROL STAND

EQUIPMENT LOCATOR – CONTROL STAND | 62-D-308 | REV A | SHT. 130 OF 700

ROOM 507

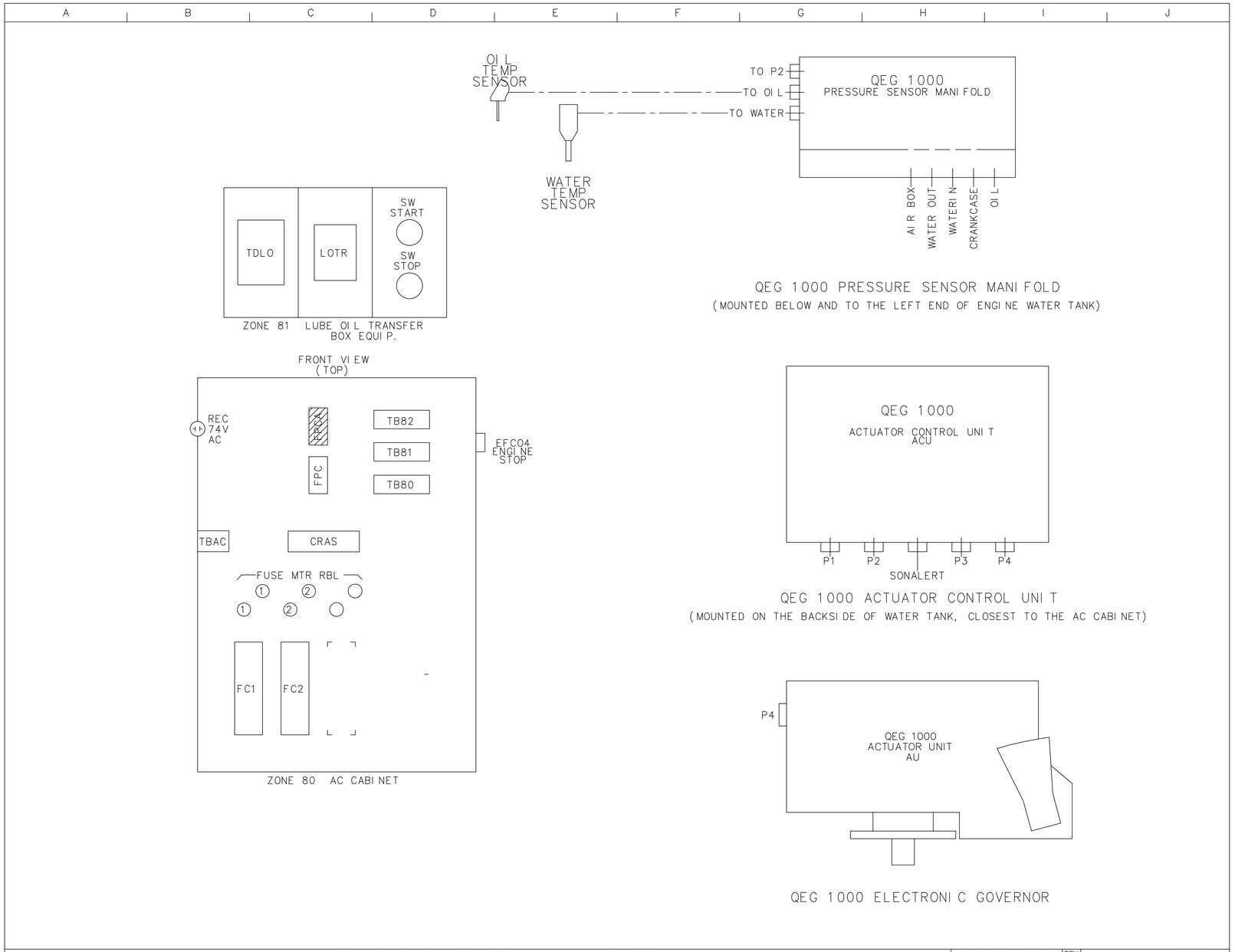

EQUIPMENT LOCATOR – AC CABINET | 62-D-308 | REV A | SHT. 140 OF 700

ROOM 507

THROTTLE POSITION	MAXIMUM RACK	HORSE POWER	ENGINE RPM	SOLENOID						DISPLAYED CHARACTER
				DB	A	B	C	D	GF	
STOP	1.96	--	0							S
LOW IDLE	1.65	--	255							L
HIGH IDLE	1.5	--	550							H
IDLE	1.65	--	300							O OR I
THROTTLE 1	1.64	80	300						X	1
THROTTLE 2	1.57	270	388		X				X	2
THROTTLE 3	1.43	570	444				X		X	3
THROTTLE 4	1.34	850	550		X		X		X	4
THROTTLE 5	1.22	1140	659			X	X	X	X	5
THROTTLE 6	1.10	1430	714		X	X	X	X	X	6
THROTTLE 7	0.91	1740	815			X	X		X	7
THROTTLE 8	0.85	2000	904		X	X	X		X	8
OVERSPEED	--	--	1017δ8							--
DB SETUP	NOTE 1	--	NOTE 1	X					X	D
INVALID COMBINATION	1.65	--	300							? OR I

THROTTLE CODE AND ENGINE RPM TABLE

DB VOLTAGE	FIELD CURRENT LIMIT	GRID CURRENT LIMIT
0	100	50
10	139	100
20	278	200
30	417	300
40	557	400
50	696	500
60	835	600
70	975	700

DYNAMIC BRAKING CONTROL LIMITS

ENGINE THROTTLE	DB VOLTAGE	FIELD CURRENT	GRID CURRENT
1	<57	<800	<575
2	57 - 61	801 - 859	575 - 614
3	62 - 65	860 - 919	615 - 654
4	>65	>920	>654

ENGINE THROTTLE PARAMETERS IN DB
(TRACTION MOTOR TEMPERATURE MANAGEMENT)

FAN OR ALARM	ON AT	OFF AT
FIRST FAN	174}F / 79}C	159}F / 70}C
SECOND FAN	190}F / 88}C	175}F / 79}C
HOT ENGINE ALARM	200}F / 93}C	190}F / 88}C
HOT ENG TH6 ALARM	208}F / 98}C	198}F / 92}C
HOT ENG IDL ALARM	215}F / 102}C	205}F / 96}C
HOT OIL TMP ALARM	260}F / 127}C	250}F / 121}C

ENGINE TEMPERATURE SETTINGS

THROTTLE	TRACTION MOTOR CURRENT LIMITS			CONTINUOUS AMPS RATING
	RATING AT 180C	RATING AT 195C	RATING GREATER THAN 195C	
1	925	175	117	425
2	1050	300	200	550
3	1125	375	250	625
4	1200	450	300	700
5	1275	525	350	775
6	1350	600	400	850
7	1425	675	450	925
8	1500	750	500	1000

CONTINUOUS AMPS RATING
(TRACTION MOTOR TEMPERATURE MANAGEMENT)

SECT	ITEM NO	DEVICE	FUNCTION	TEST CONDITIONS	ADJUST AT	SETTINGS	REMARKS
II EXCITATION CONTROL	1	GV12	VOLT LIMIT REGULATION	1.25 TO 1.4 OHM GRID LOAD	NONE	1250 ±25V	RUN 8, 5-9 JUMPERED
	2	GX2	EXCIT LIMIT REGULATOR	AR10 SHORT CKT. MEAS. GEN FLD CUR	NONE	144 ±3A	JUMPER 5-7
	3					108 ±2A	JUMPER 5-6
	4	EL11	EXCIT LIMIT PROTECTION	AR10 SHORT CKT. MEAS. GEN FLD CUR	NONE	154 ±3A	JUMPER 3-9
						114 ±3A	NO JUMPERS
III DYNAMIC BRAKE	5	DBS-	DYN BRK INTERLOCK SWITCH		DBS	PRESET	OPENS AT 60 PSI CLOSES AT 40 PSI
IV RELAY	6	TDLO	LUBE OIL TRANSFER		TDLO	PRESET	3 MIN DELAY ON P.U.
	7	CLOPTD	COMPRESSOR LOW OIL PRESSURE		CLOPTD	PRESET	10 SECOND DELAY ON D.O.
MODULES		SA10					
		VR15					OPENS AT 40 PSI CLOSES AT 20 PSI
CONTROL		CCS	COMPRESSOR CONTROL		CCS		OPENS AT 130 PSI CLOSES AT 140 PSI
		PCS					OPENS AT 40 PSI CLOSES AT 20 PSI

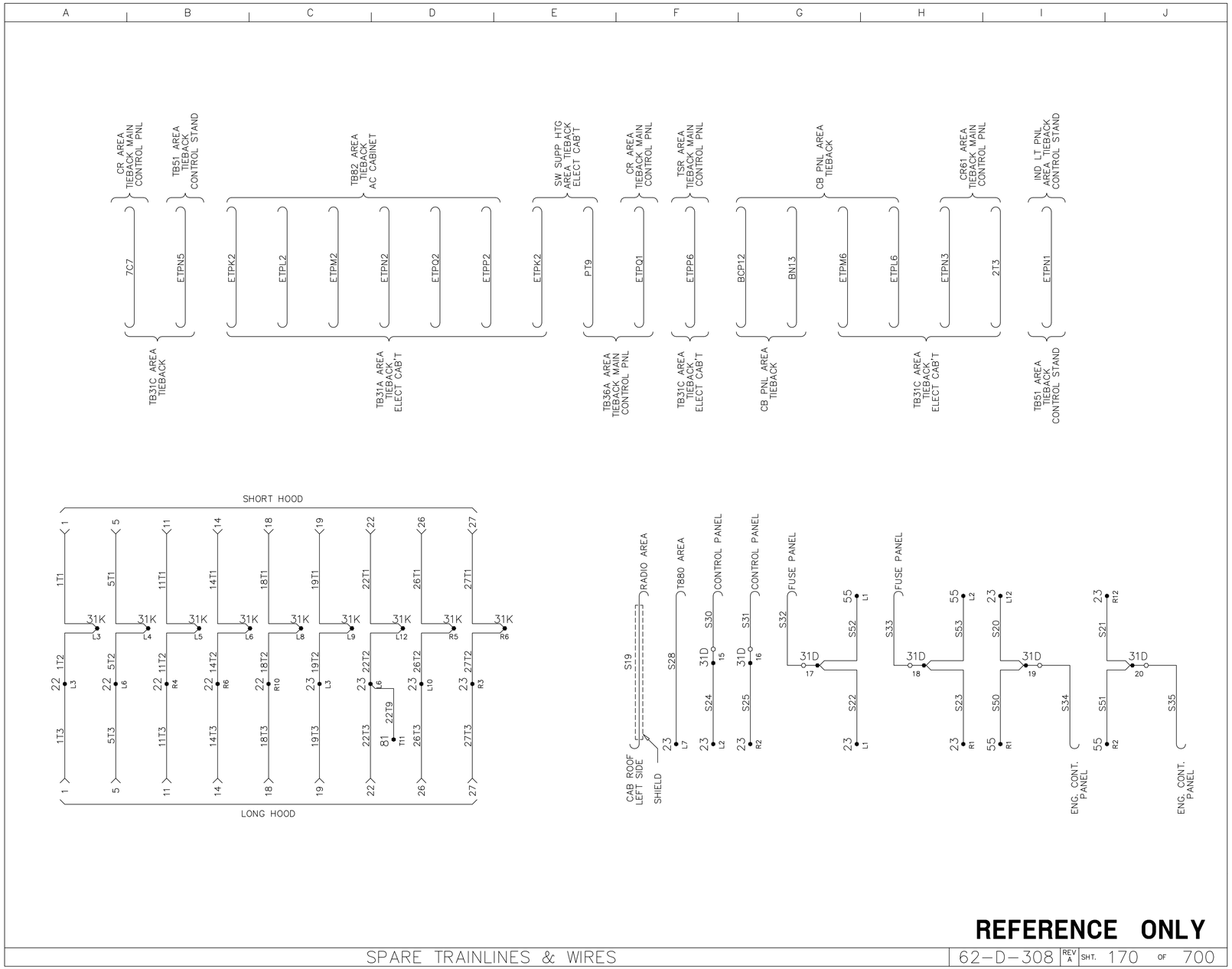

REFERENCE ONLY

SPARE TRAINLINES & WIRES

62-D-308 REV A SHT. 170 OF 700

ROOM 507

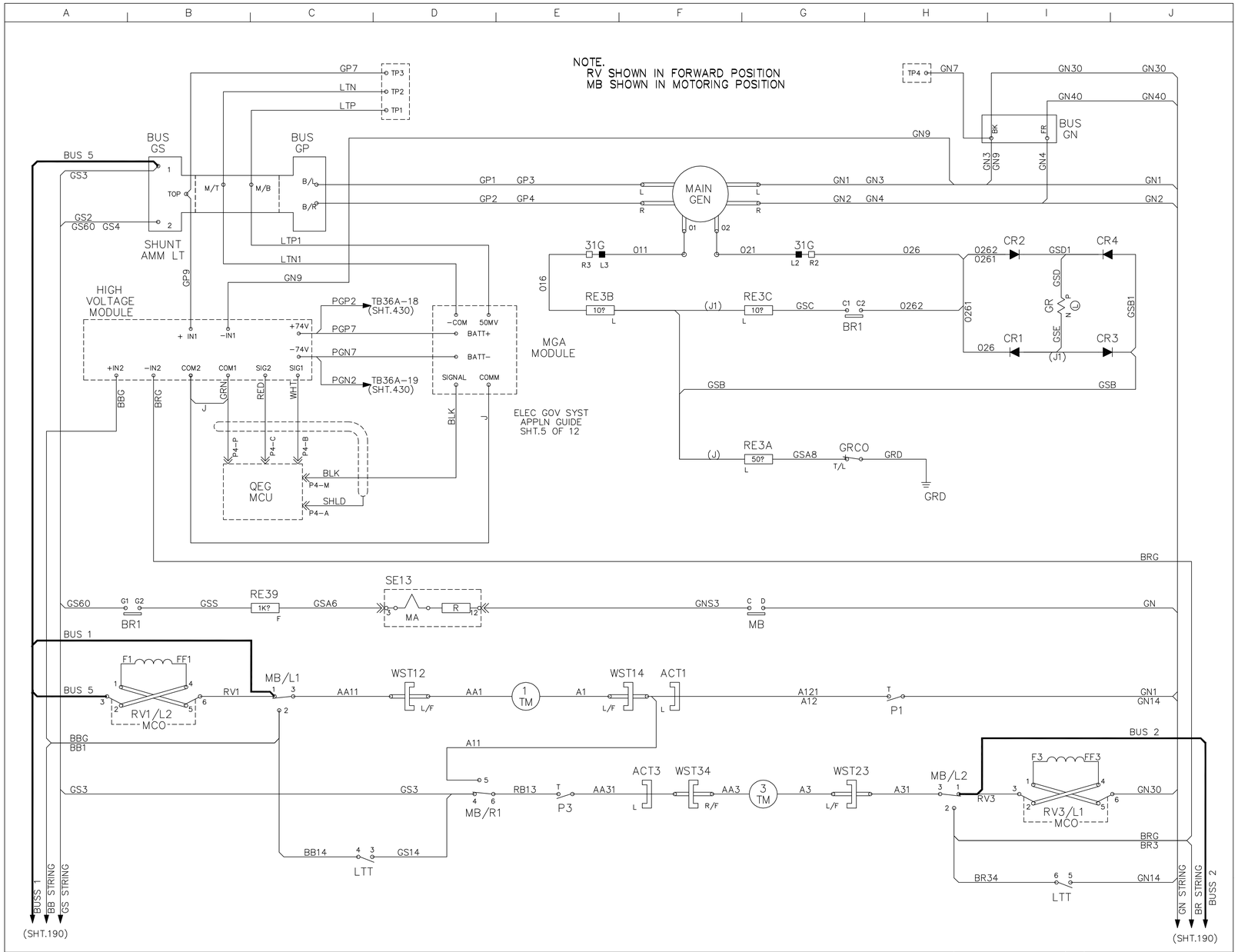
NOTE.
RV SHOWN IN FORWARD POSITION
MB SHOWN IN MOTORING POSITION
BUS GS
BUS GP
SHUNT AMM LT
HIGH VOLTAGE MODULE
TB36A-18 (SHT.430)
TB36A-19 (SHT.430)
MAIN GEN
BUS GN
MGA MODULE
ELEC GOV SYST APPLN GUIDE SHT.5 OF 12
QEG MCU
RE3B
RE3C
RE3A
GRCO
GRD
CR1
CR2
CR3
CR4
BR1
RE39
SE13
MB
MB/L1
WST12
1 TM
WST14
ACT1
P1
RV1/L2 MCO
ACT3
WST34
3 TM
WST23
MB/L2
RV3/L1 MCO
MB/R1
P3
LTT
(SHT.190)
HIGH VOLTAGE
62-D-308
REV A
SHT. 180 OF 700

ROOM 507

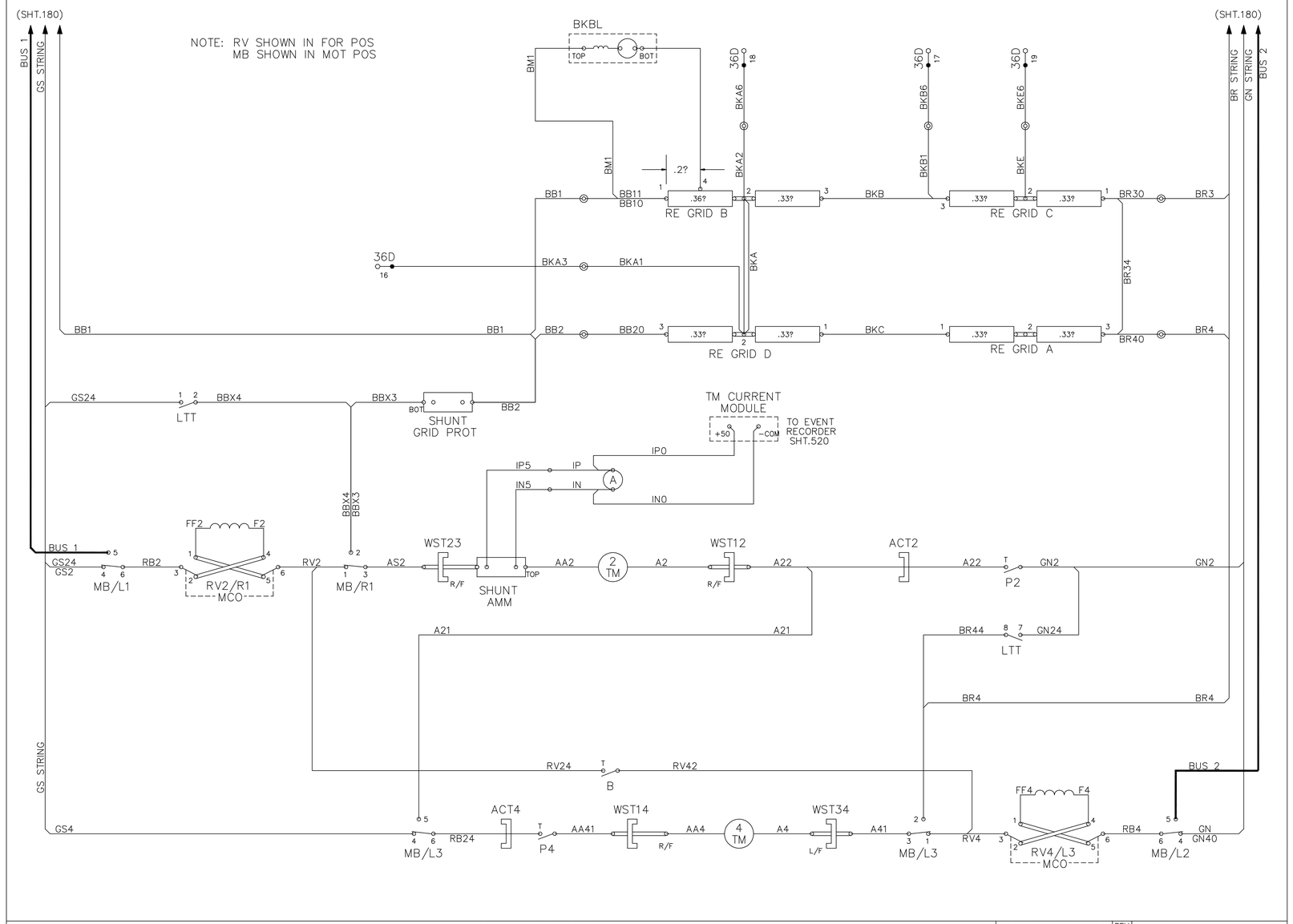

HIGH VOLTAGE | 62-D-308 | REV A | SHT. 190 OF 700

ROOM 507

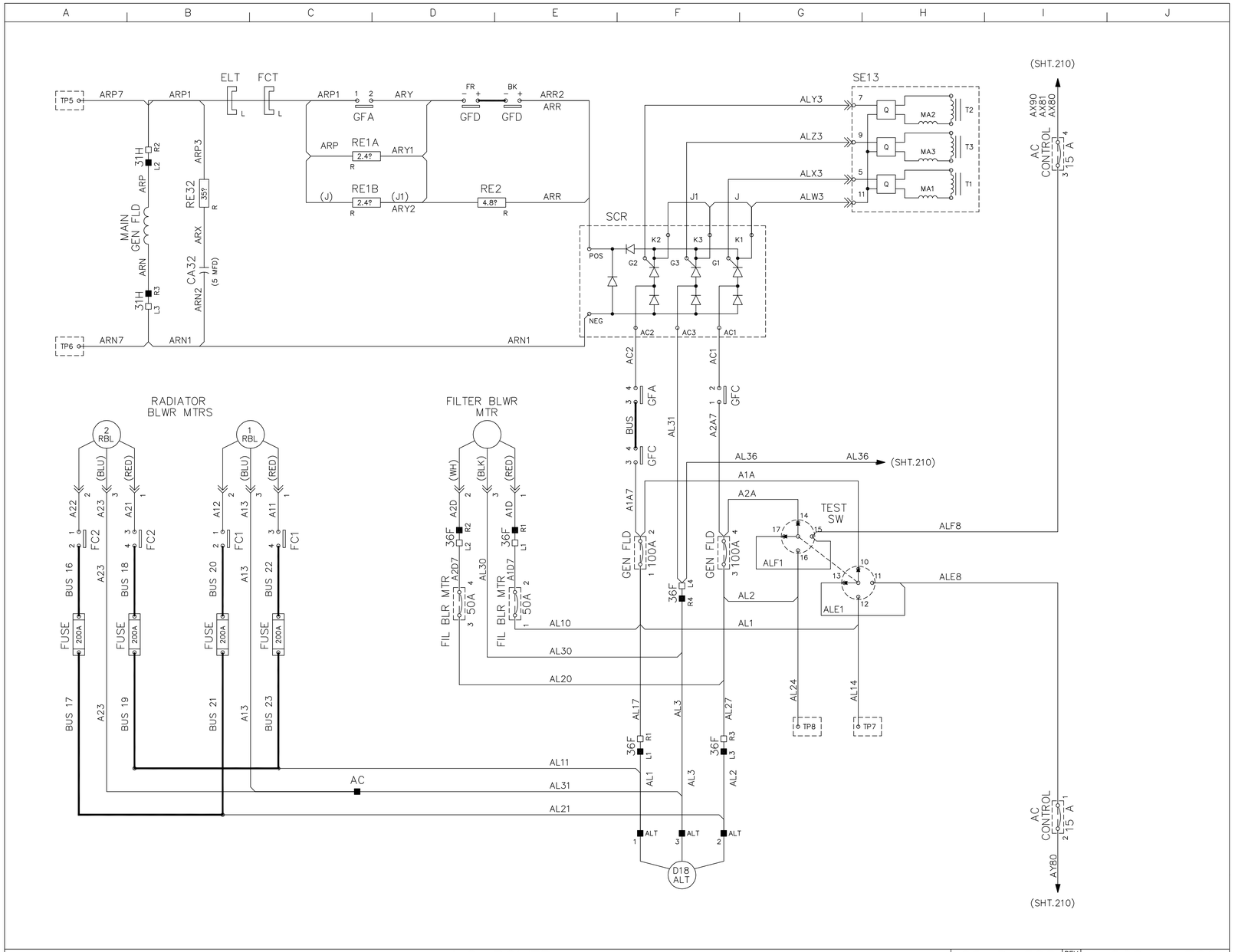

A.C. POWER | 62-D-308 | REV A | SHT. 200 OF 700

ROOM 507

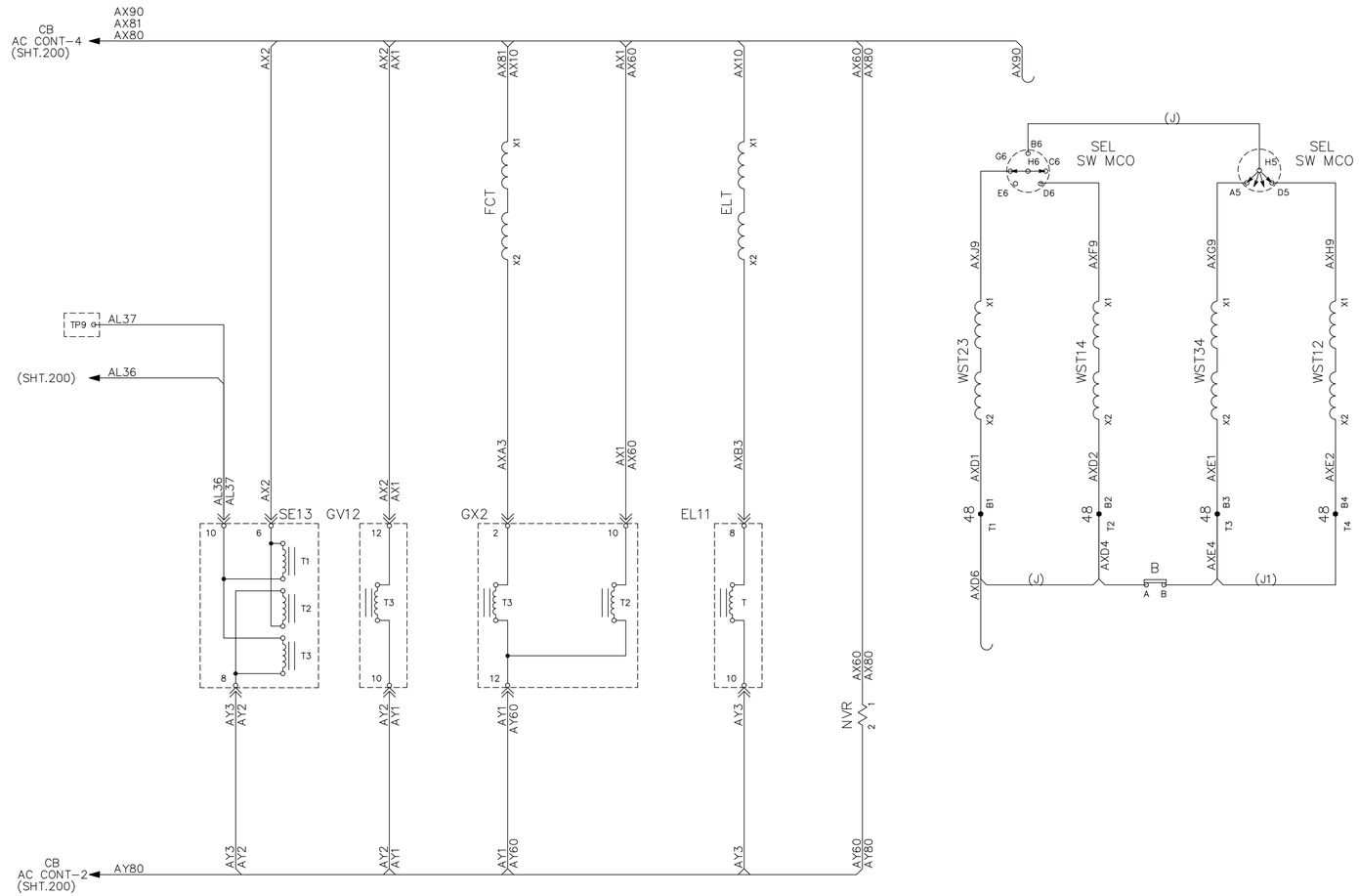

MODULE POWER SUPPLY | 62-D-308 | REV A | SHT. 210 OF 700

ROOM 507

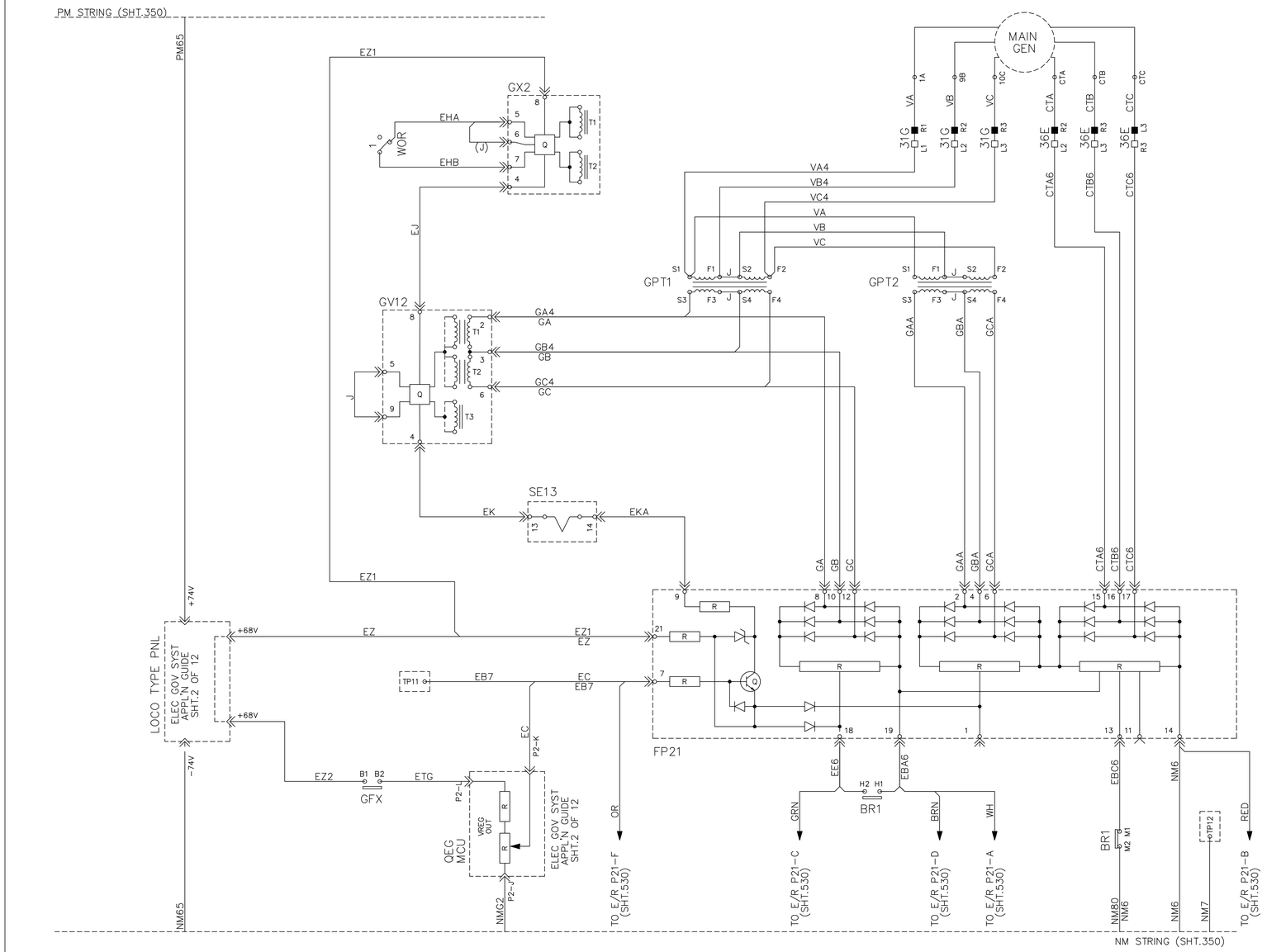

GEN. SENSOR BY PASS & PERFORMANCE CONTROL CIRCUIT | 62-D-308 | REV A | SHT. 220 OF 700

ROOM 507

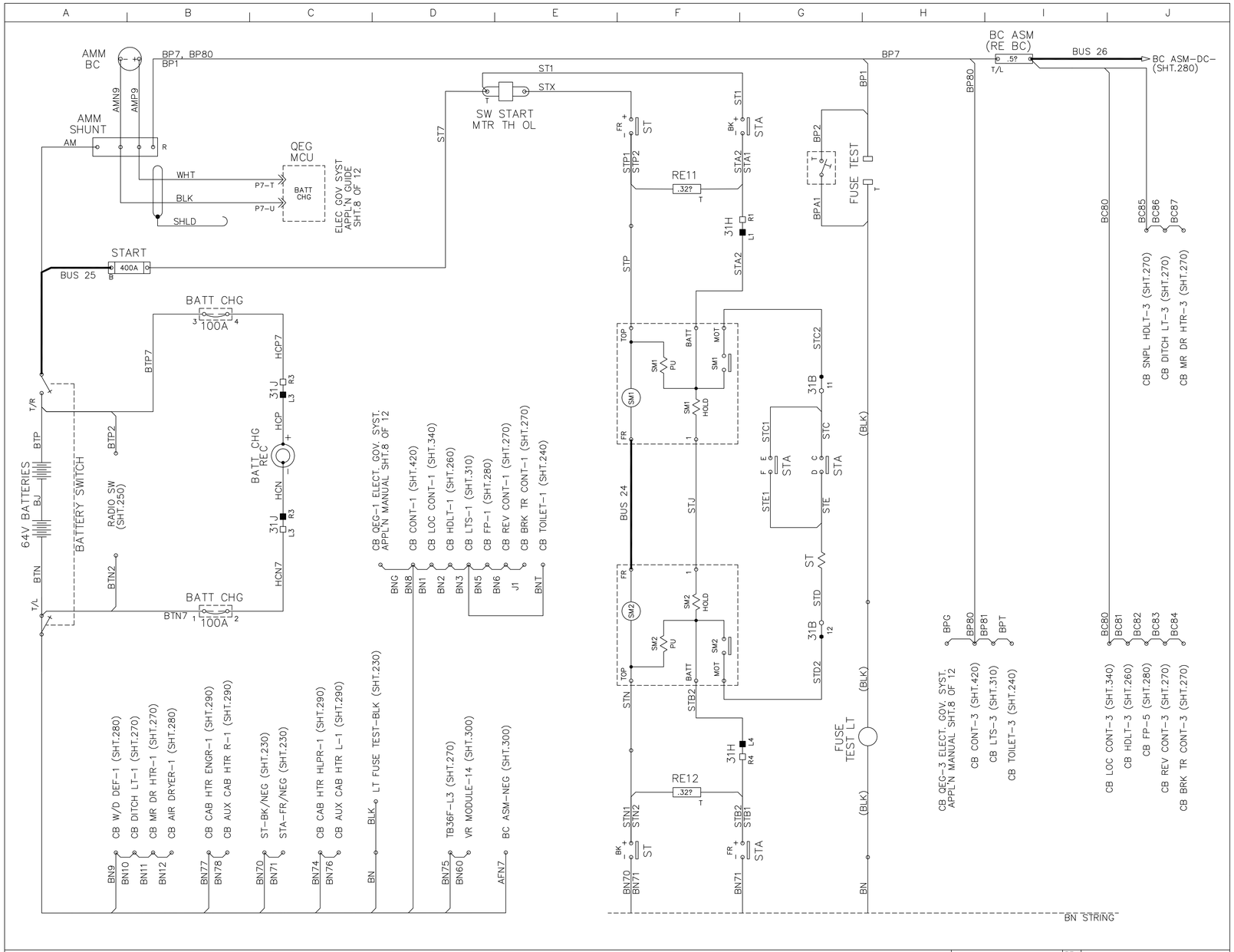

BN STRING, BATTERIES, FUSE TEST & STARTING | 62-D-308 | REV A | SHT. 230 OF 700

ROOM 507

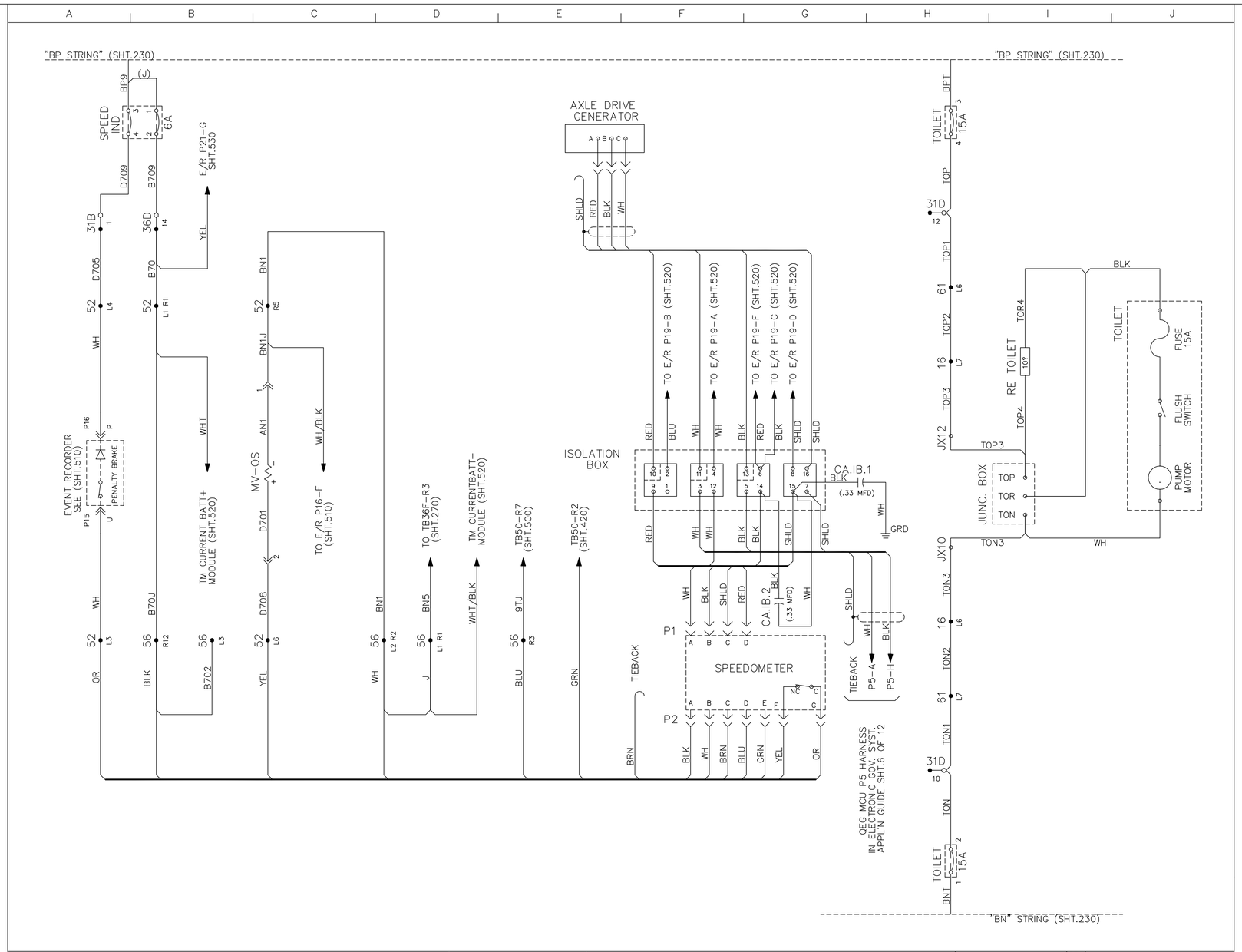

SPEED INDICATOR (ISOLATION BOX) & TOILET

62-D-308 REV A SHT. 240 OF 700

ROOM 507

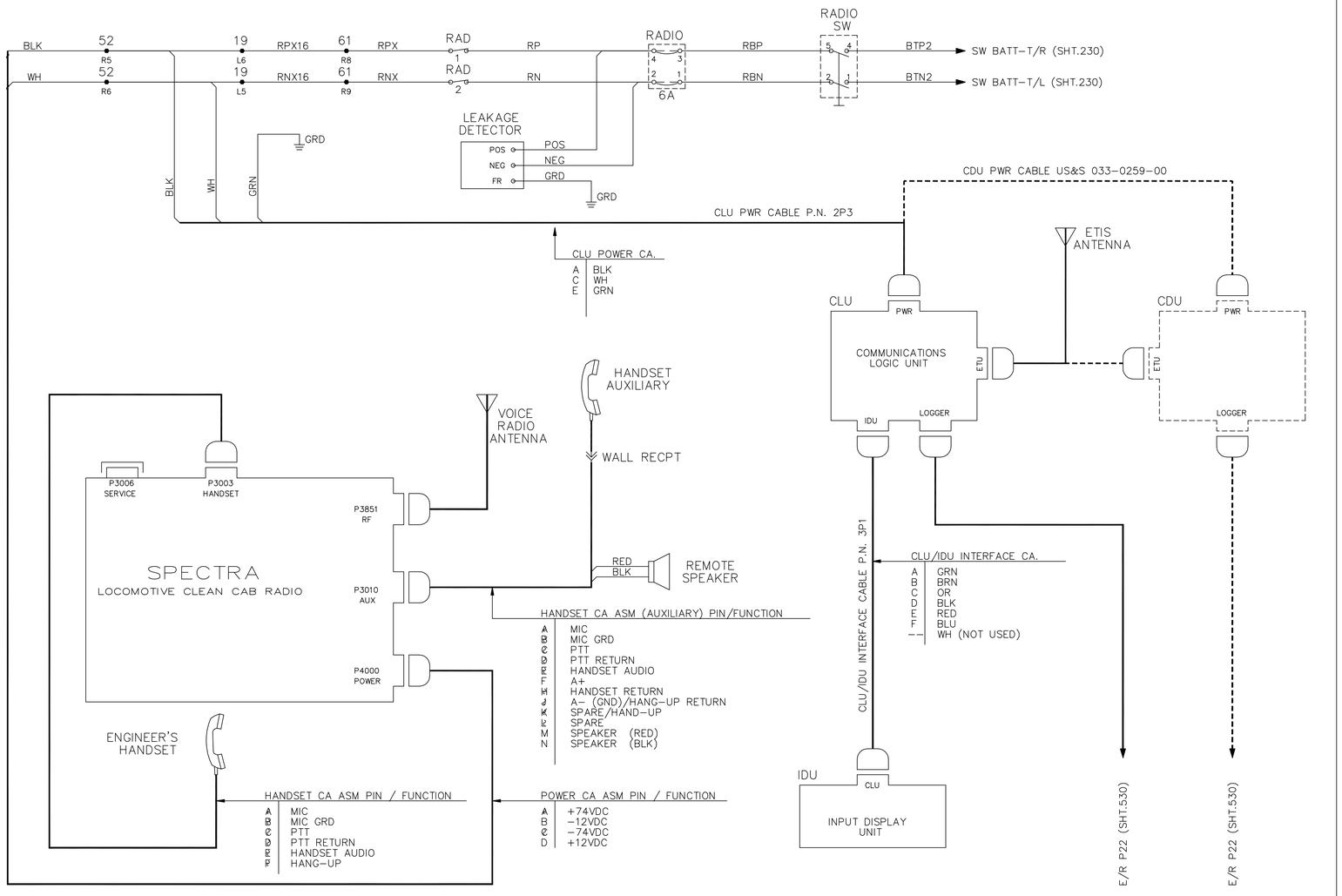

RADIO, CLU & IDU – MOTHER | 62-D-308 | REV A | SHT. 250 OF 700

ROOM 507

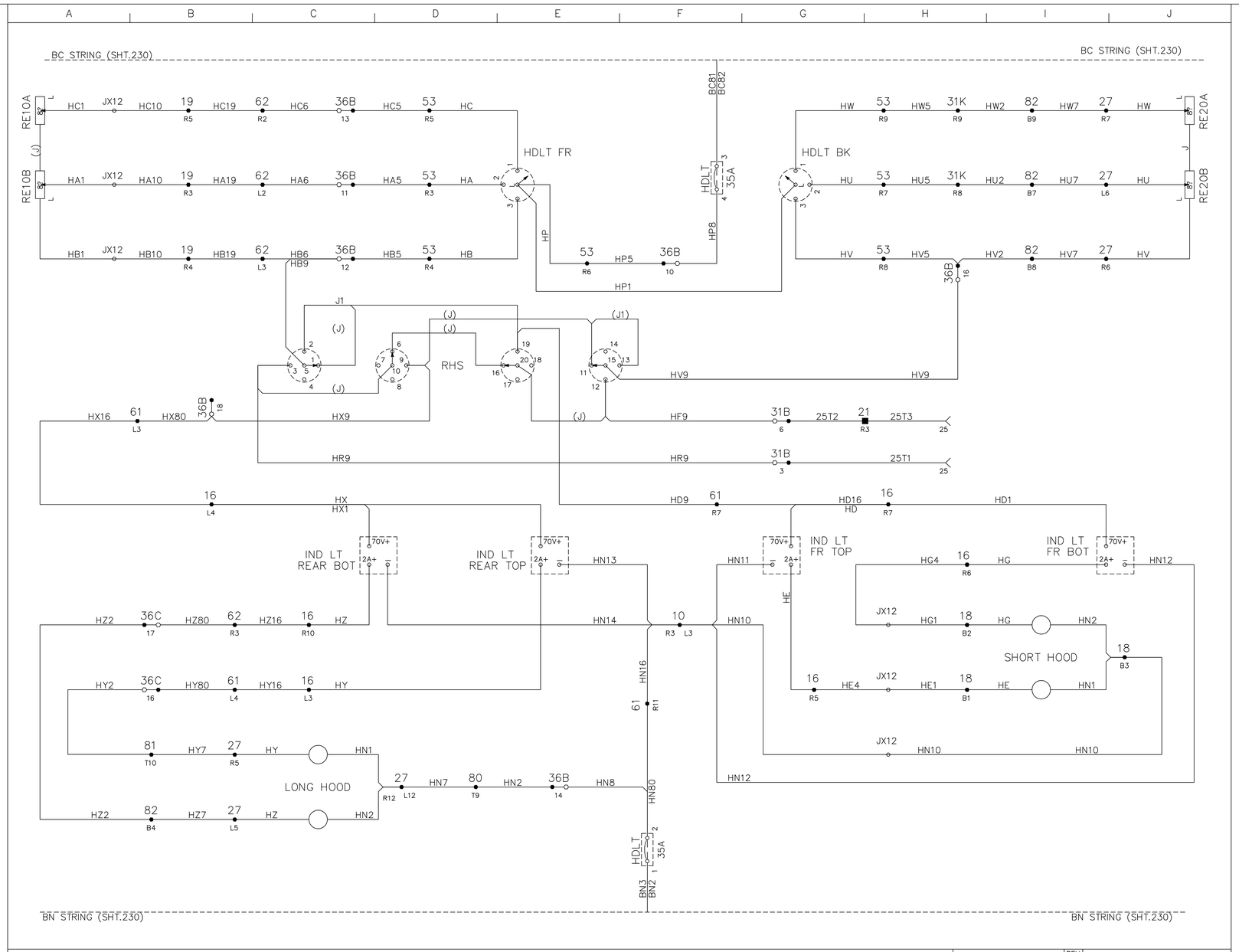

HEADLIGHT CIRCUIT | 62-D-308 | REV A | SHT. 260 OF 700

ROOM 507

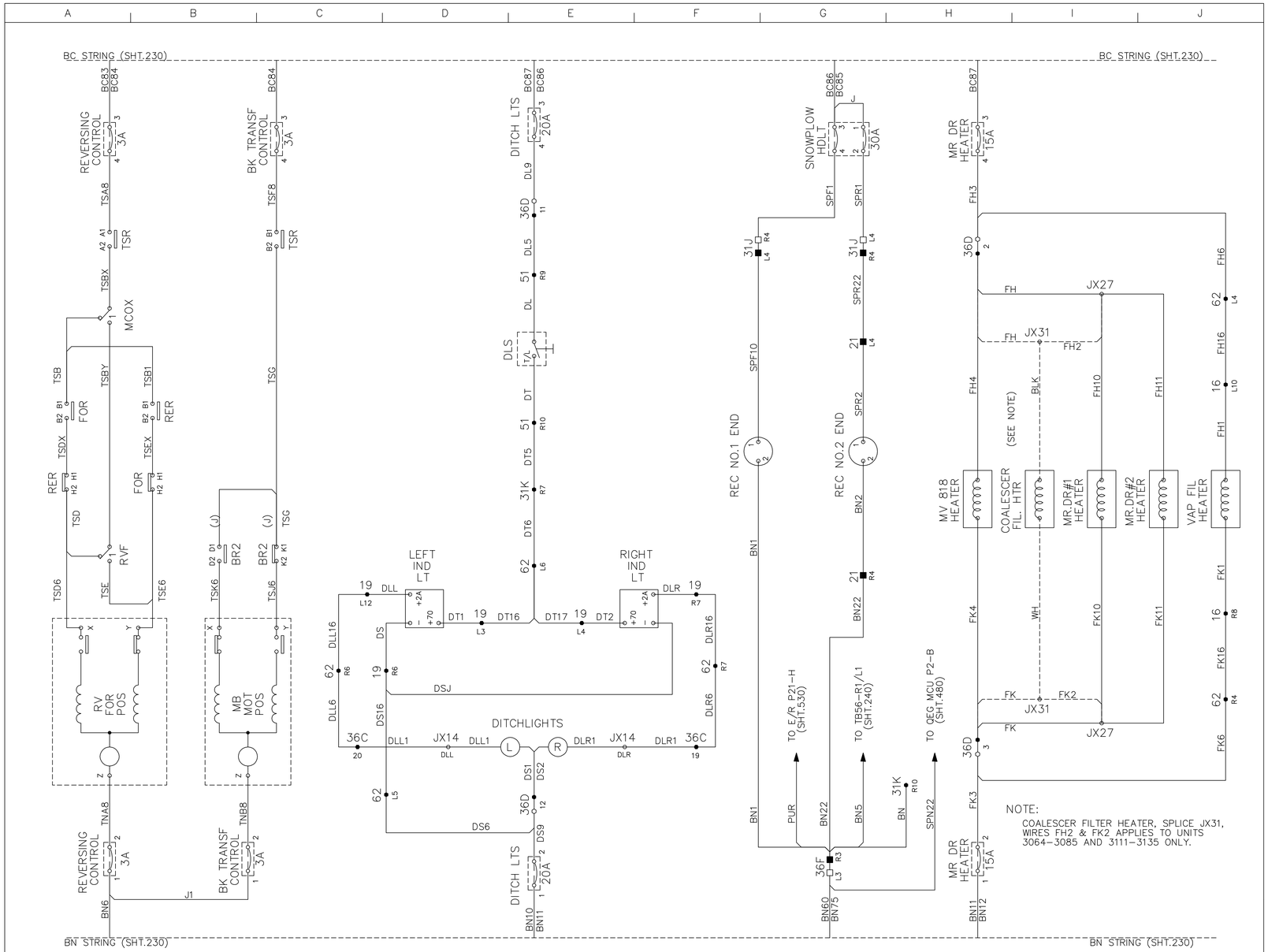

TRANSFER SWS, DITCH LTS, SNPL HDLT, & DRAIN HTRS

62-D-308 REV A SHT. 270 OF 700

ROOM 507

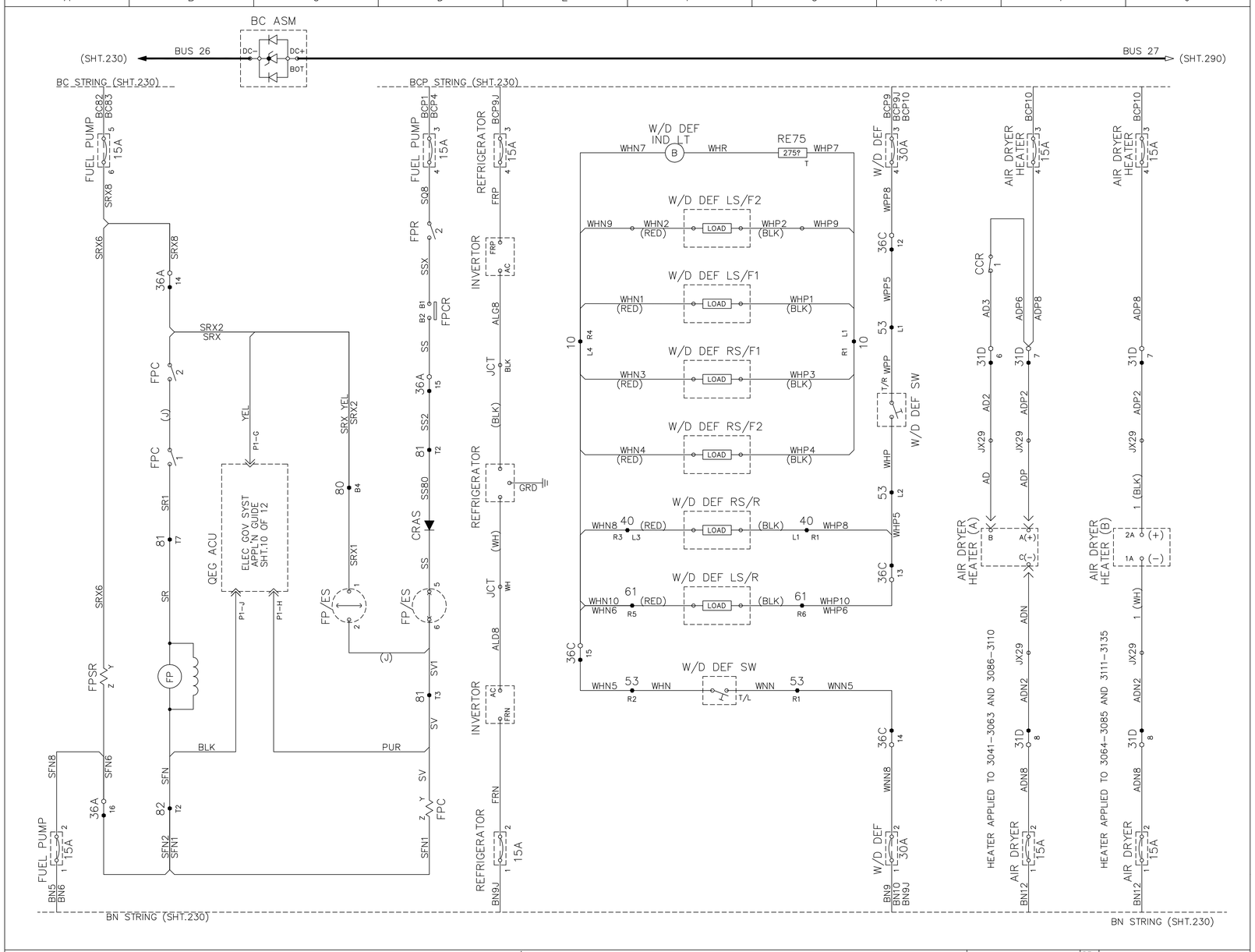

FUEL PUMP, REFRIGERATOR, W/D HTRS AND AIR DRYERS

62-D-308 REV A SHT. 280 OF 700

ROOM 507

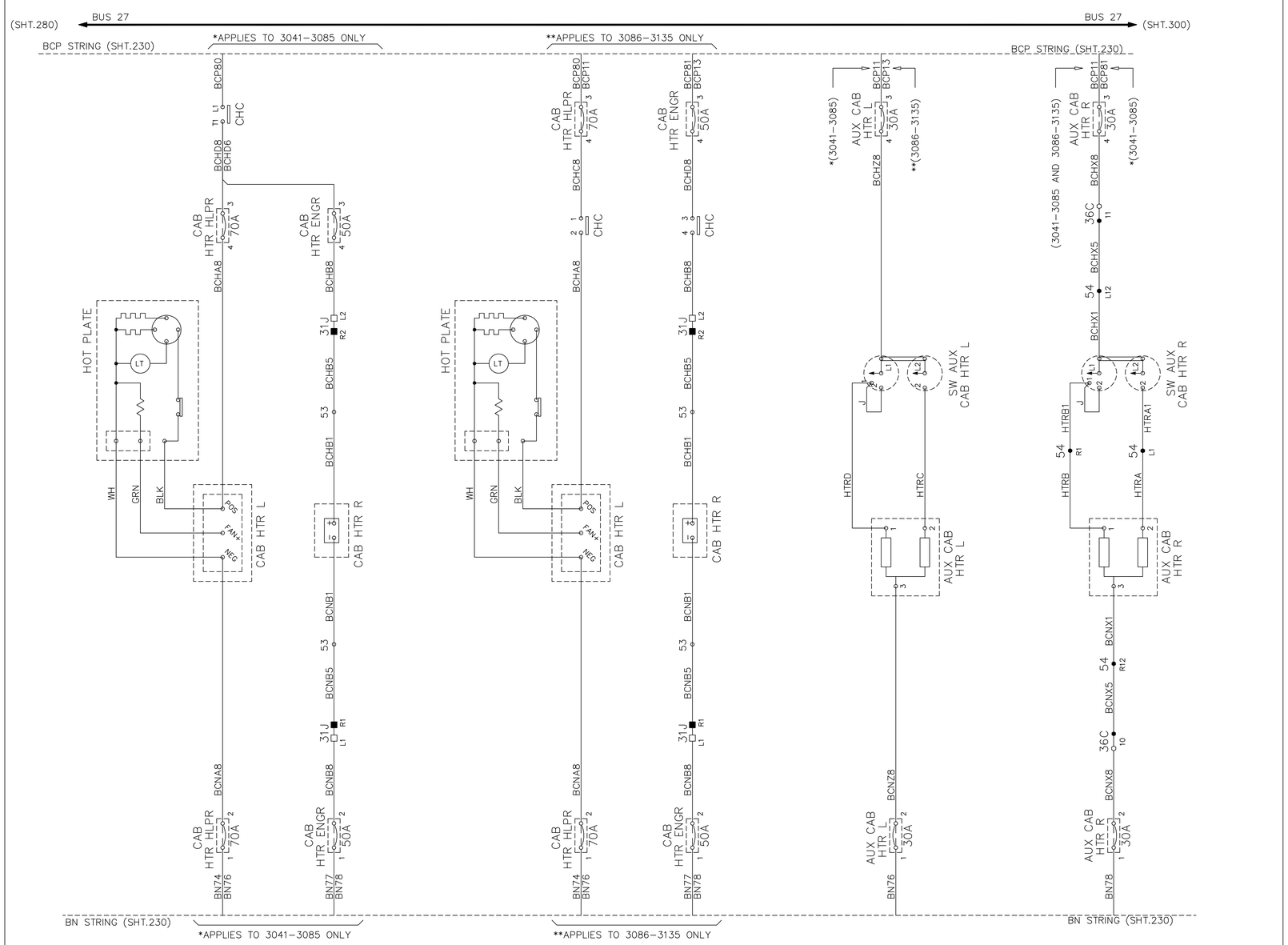

CAB HTRS, AUX CAB HTRS AND HOT PLATE | 62-D-308 | REV A | SHT. 290 OF 700

ROOM 507

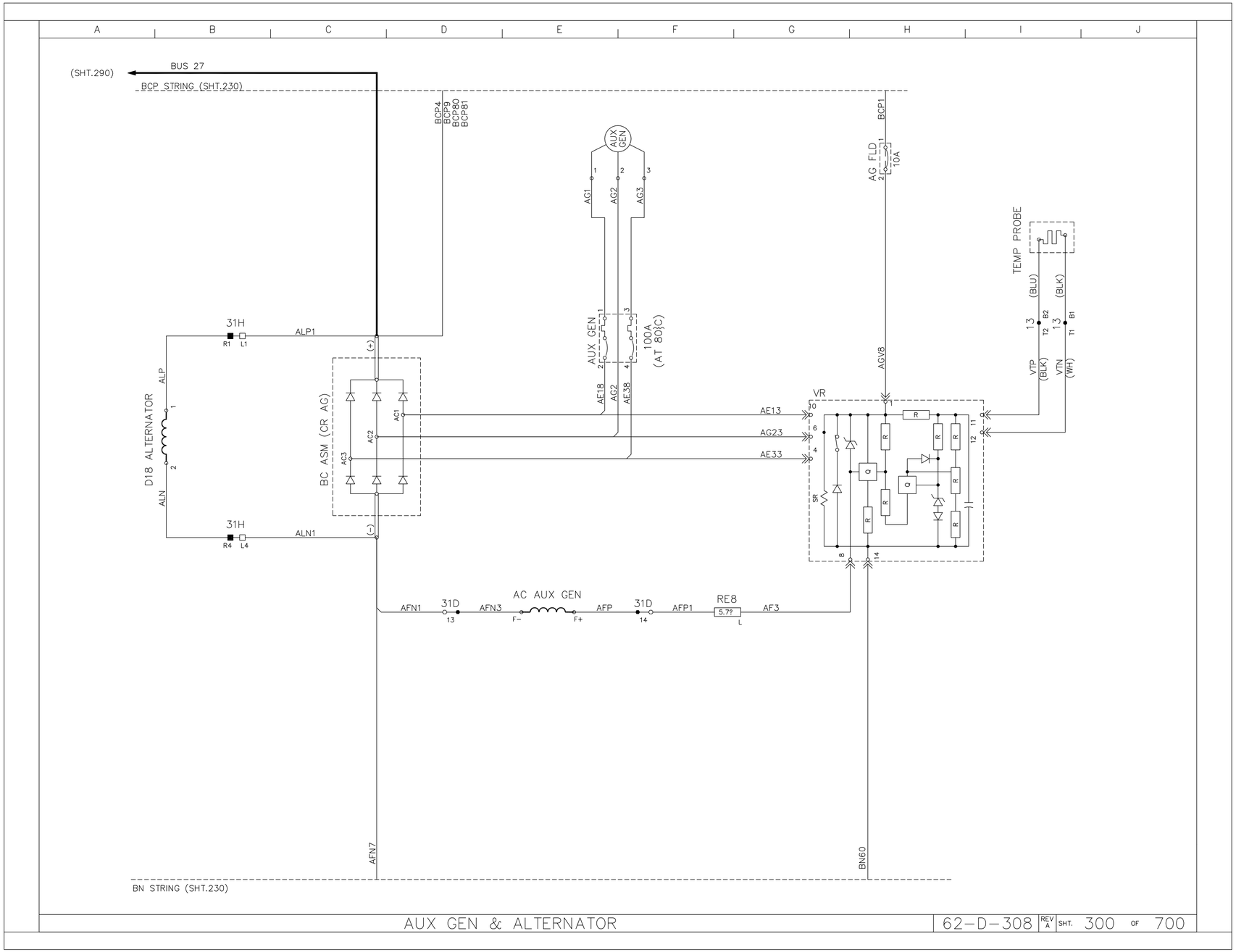

AUX GEN & ALTERNATOR | 62-D-308 | REV A | SHT. 300 OF 700

ROOM 507

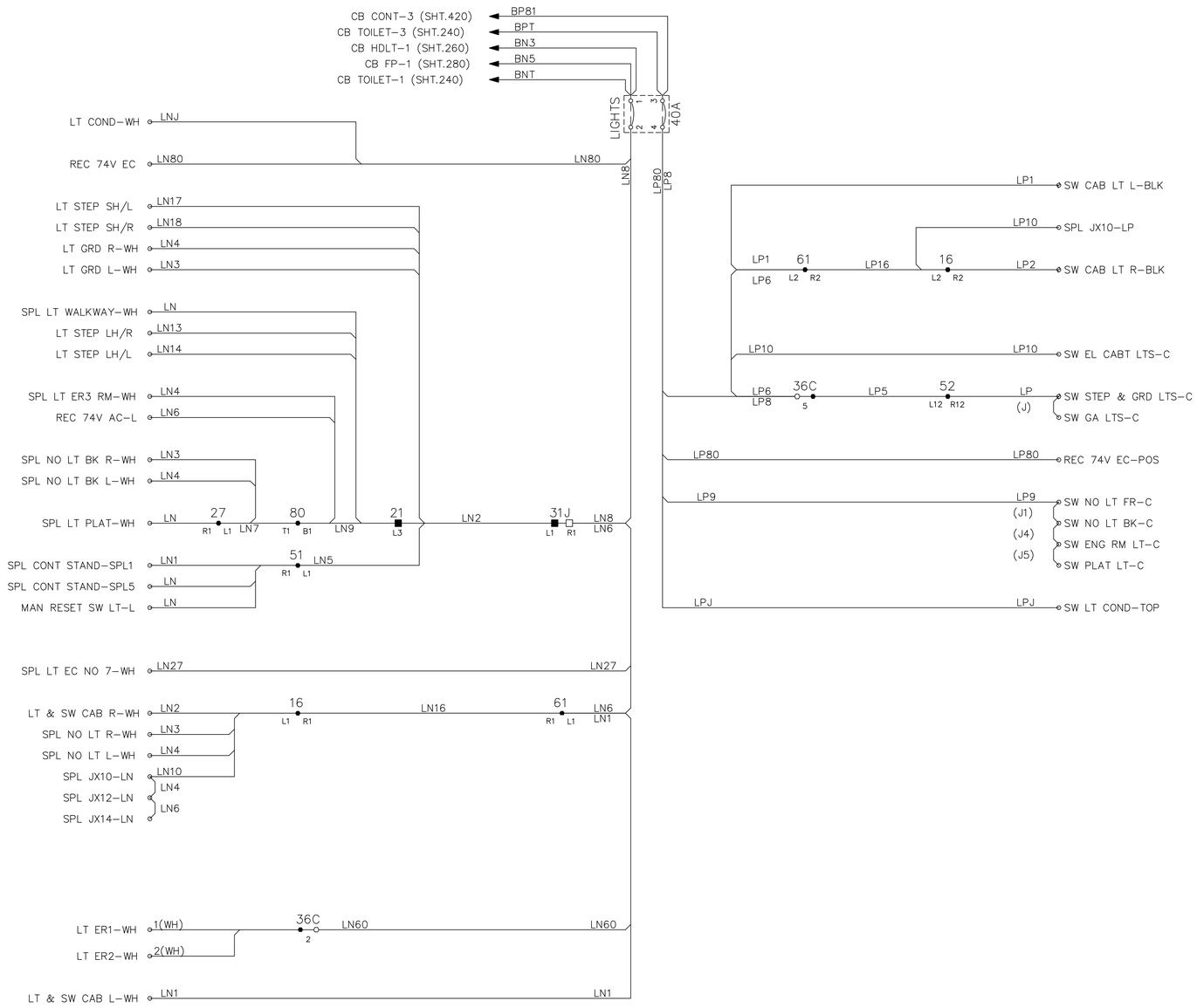

LIGHTING – LP & LN STRINGS | 62-D-308 | REV A | SHT. 310 OF 700

ROOM 507

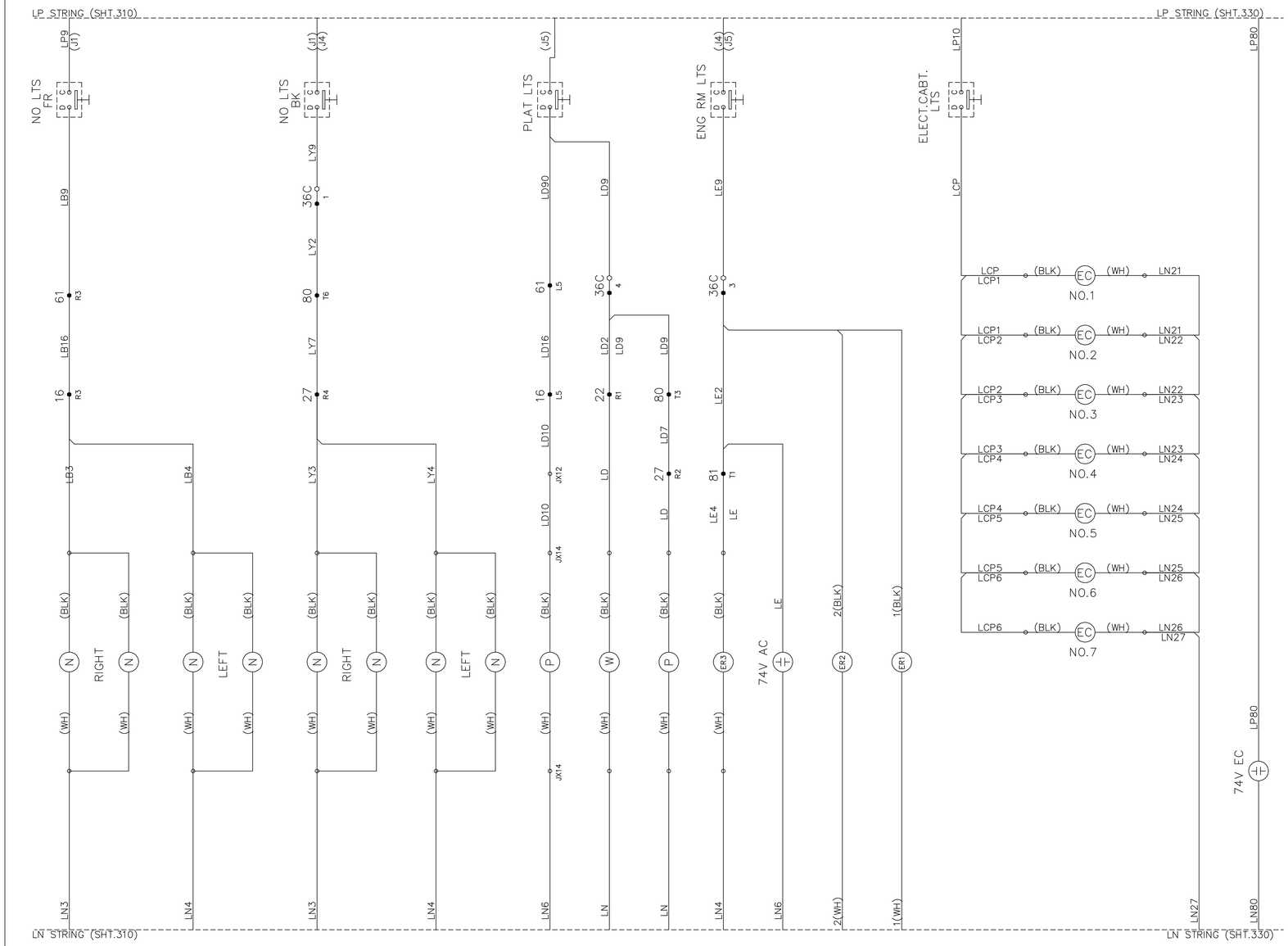

LIGHTING – GENERAL

62-D-308 REV A SHT. 320 OF 700

ROOM 507

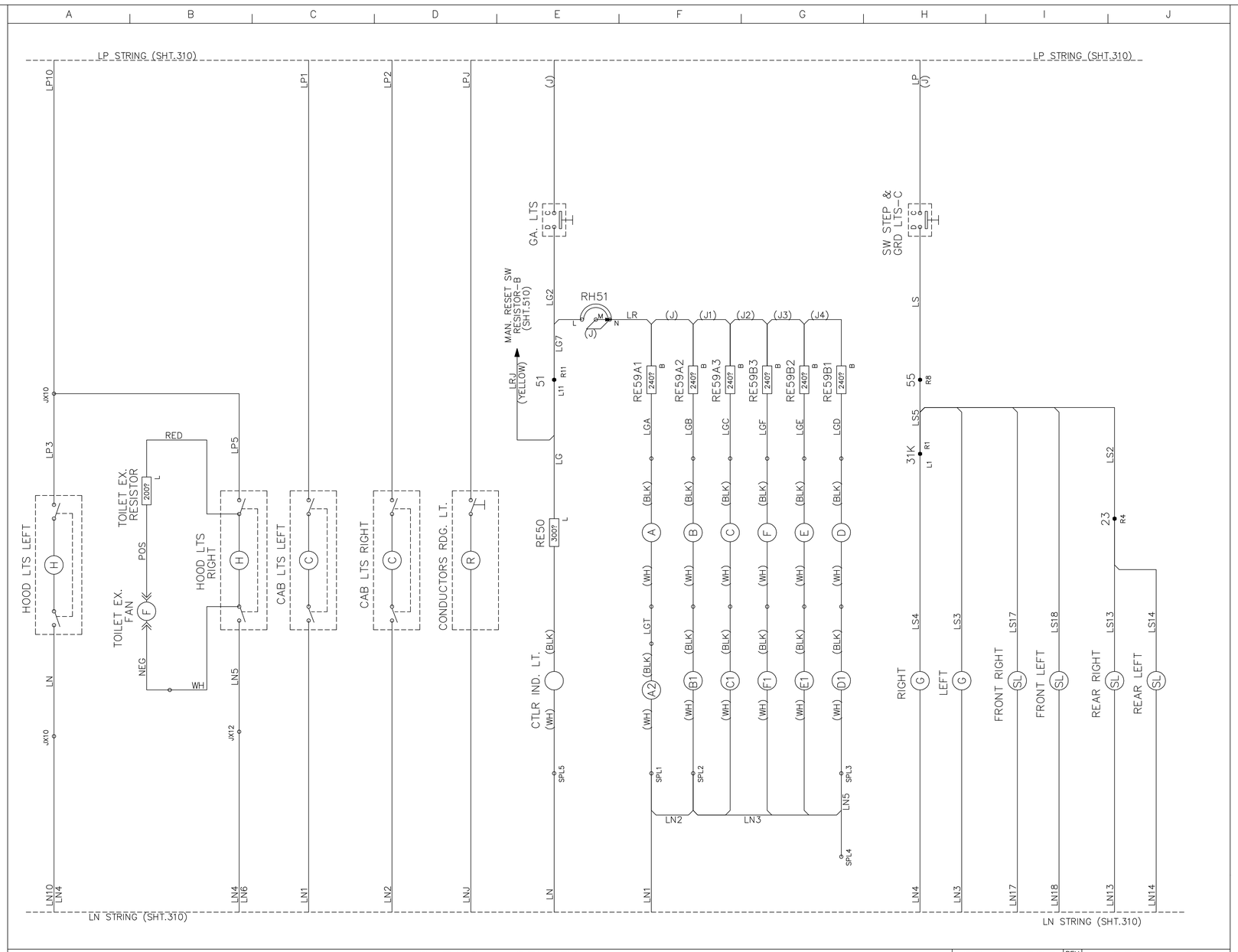

LIGHTING – GENERAL

62-D-308 REV A SHT. 330 OF 700

ROOM 507

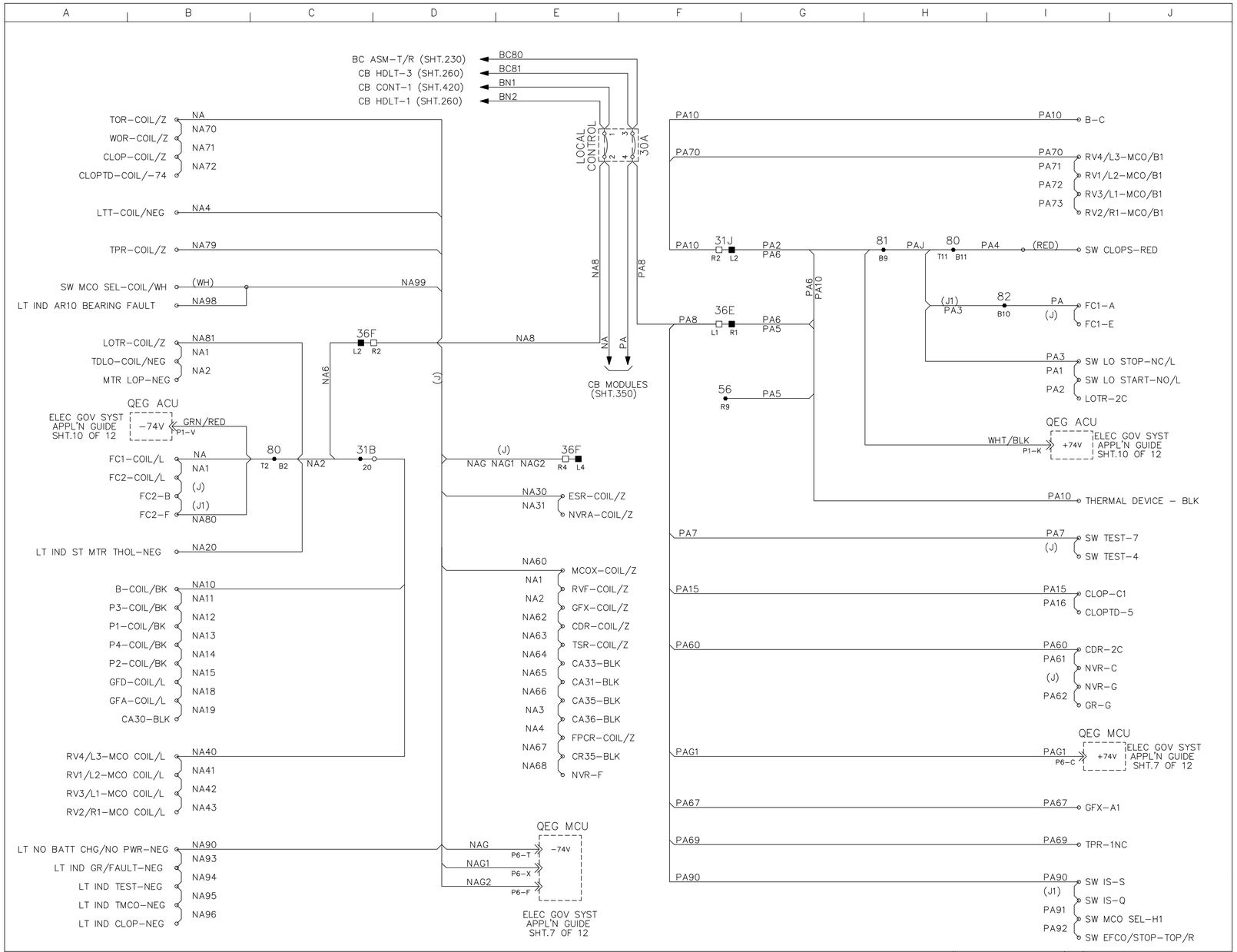

PA & NA STRINGS | 62-D-308 | REV A | SHT. 340 OF 700

ROOM 507

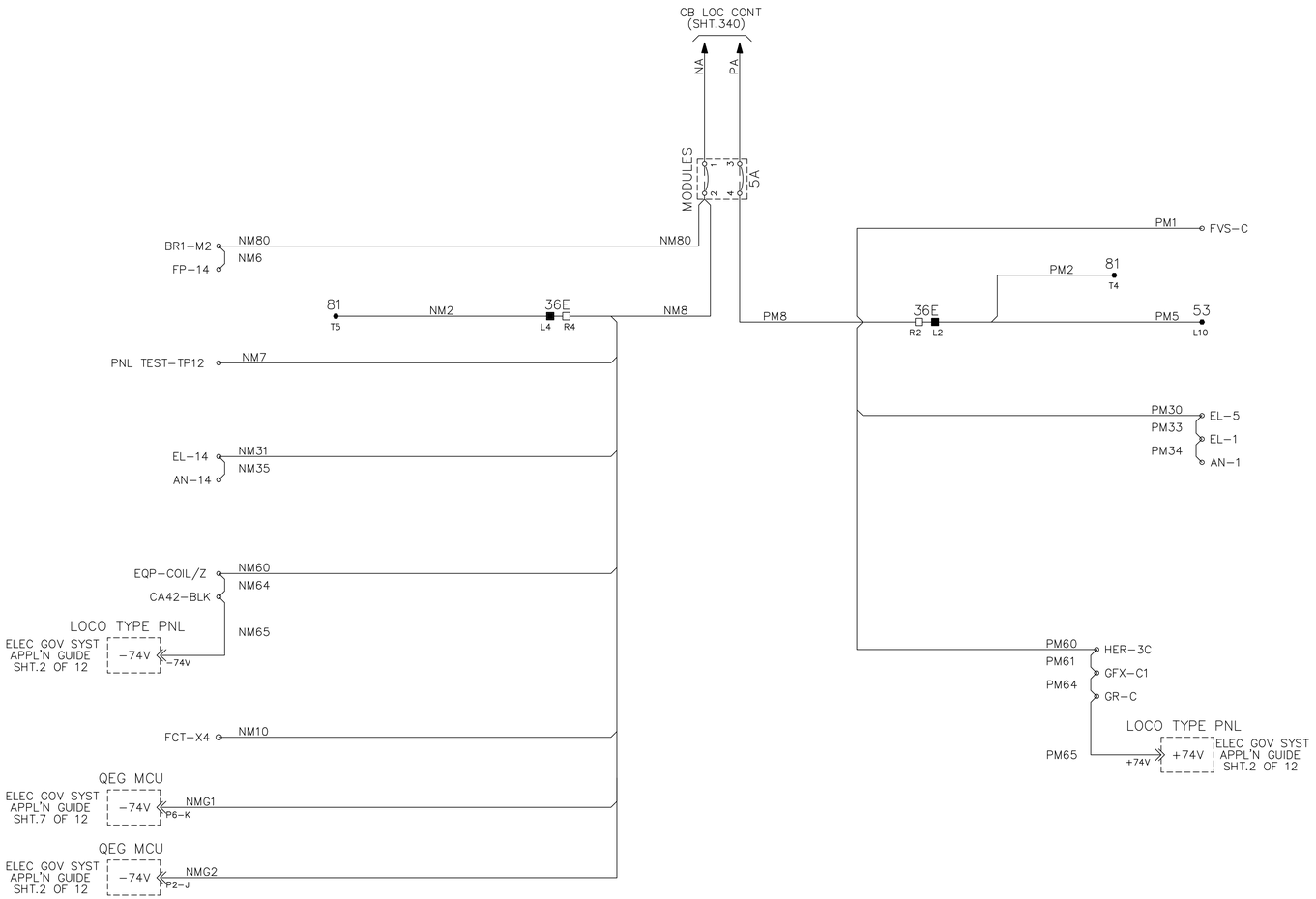

PM & NM STRINGS

62-D-308 REV A SHT. 350 OF 700

ROOM 507

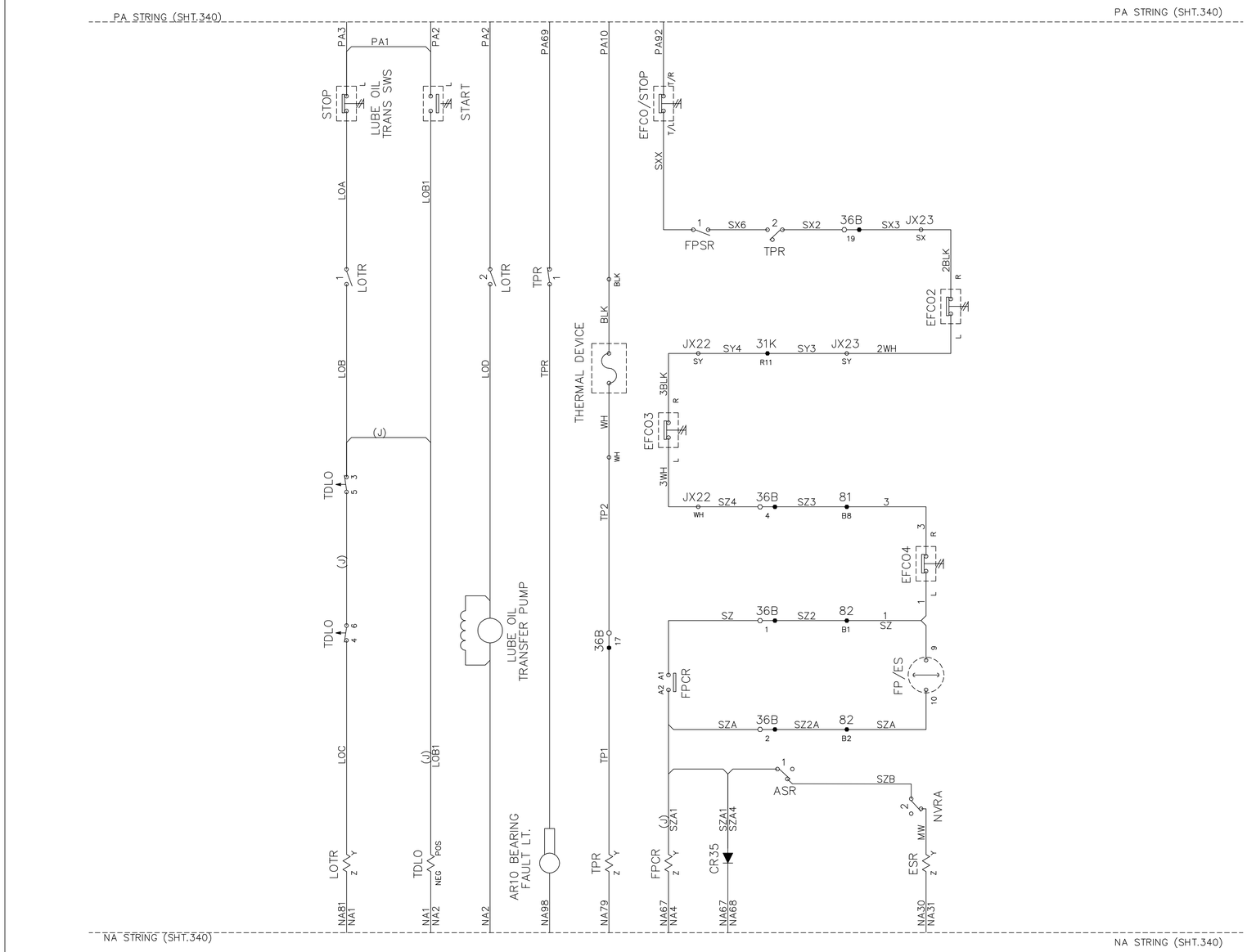

ENGINE STOP–START

62–D–308 REV A SHT. 360 OF 700

ROOM 507

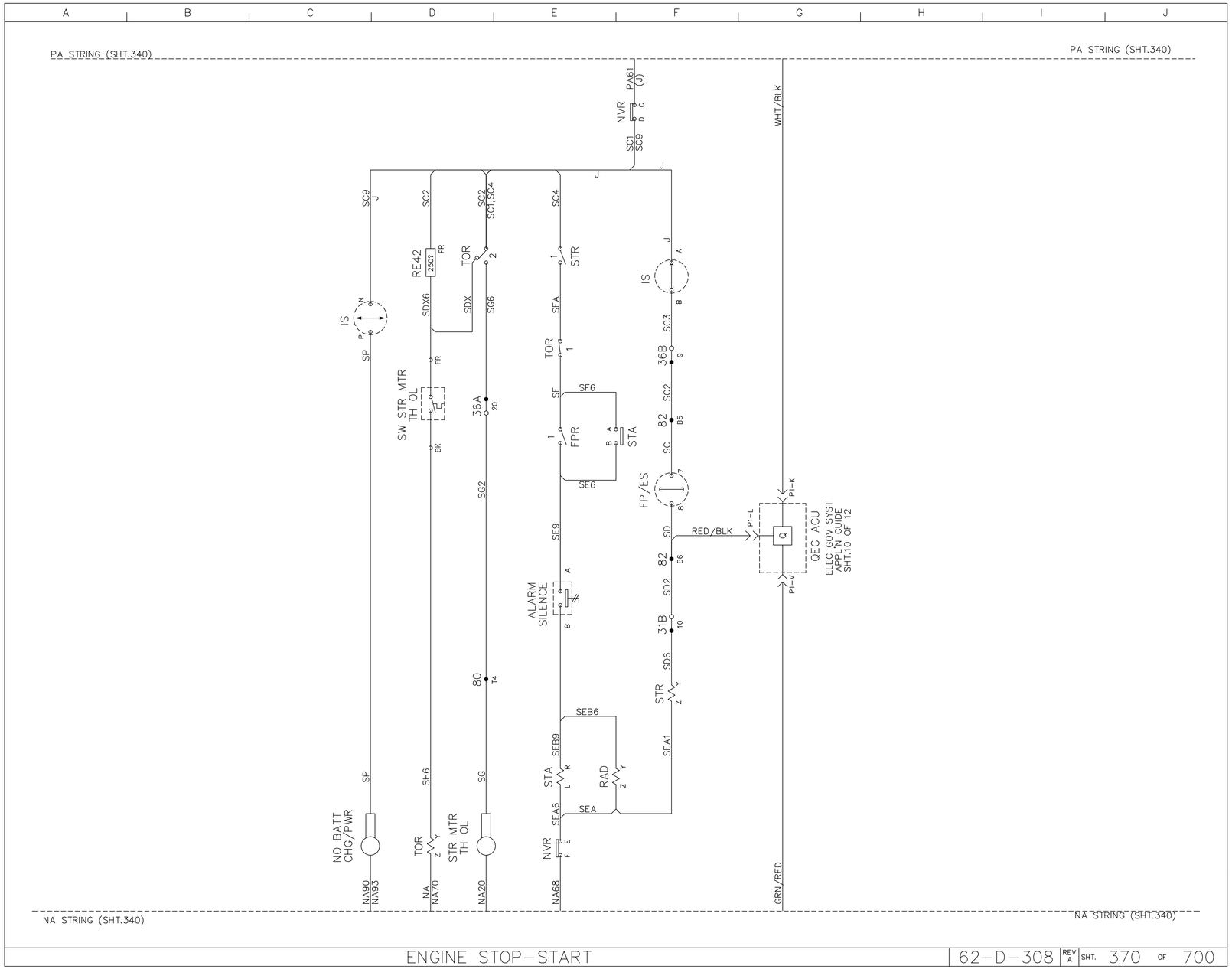

ENGINE STOP-START | 62-D-308 | REV A | SHT. 370 OF 700

ROOM 507

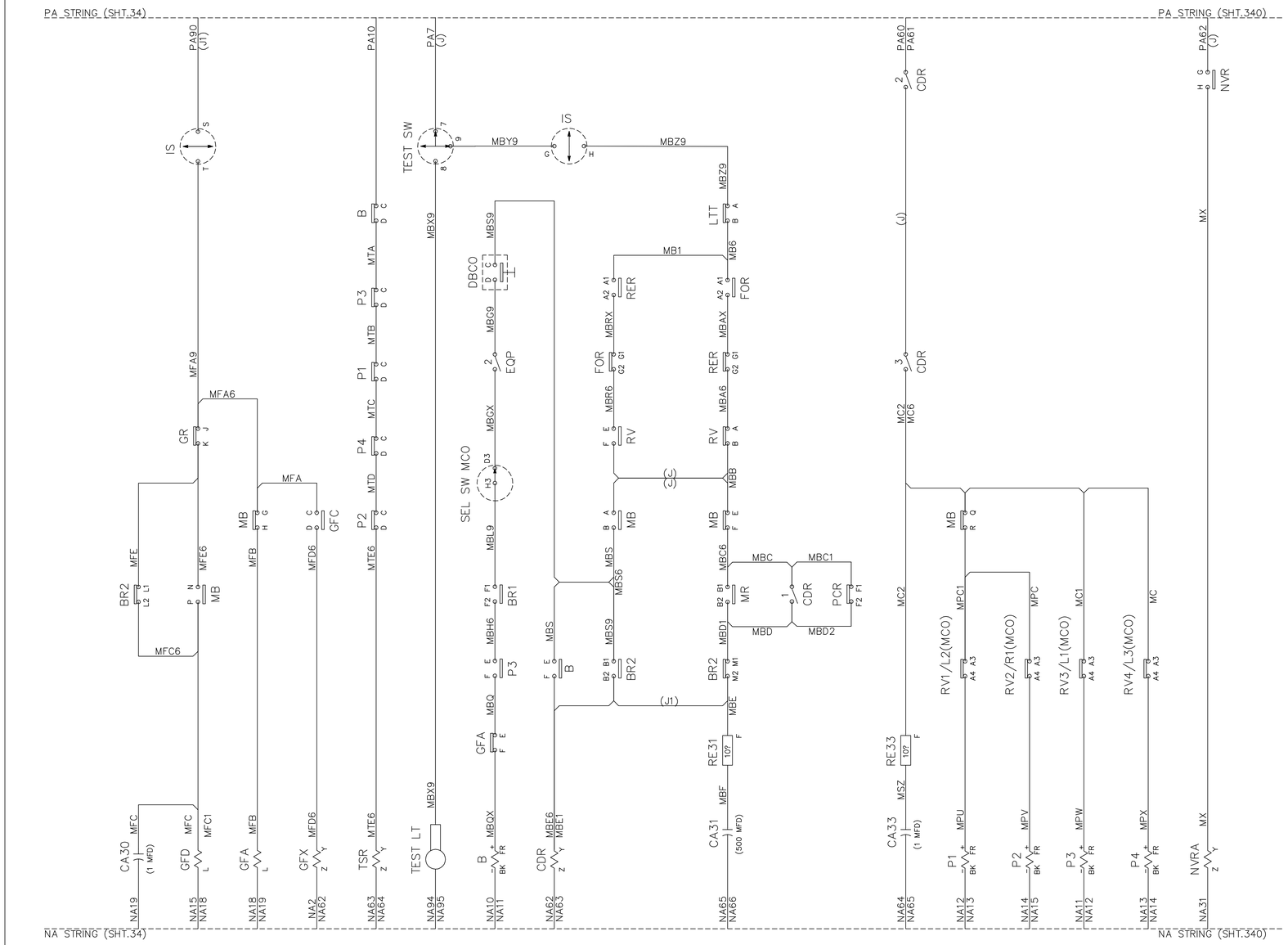

MOTOR CONNECT CONTROL | 62-D-308 | REV A | SHT. 380 OF 700

ROOM 507

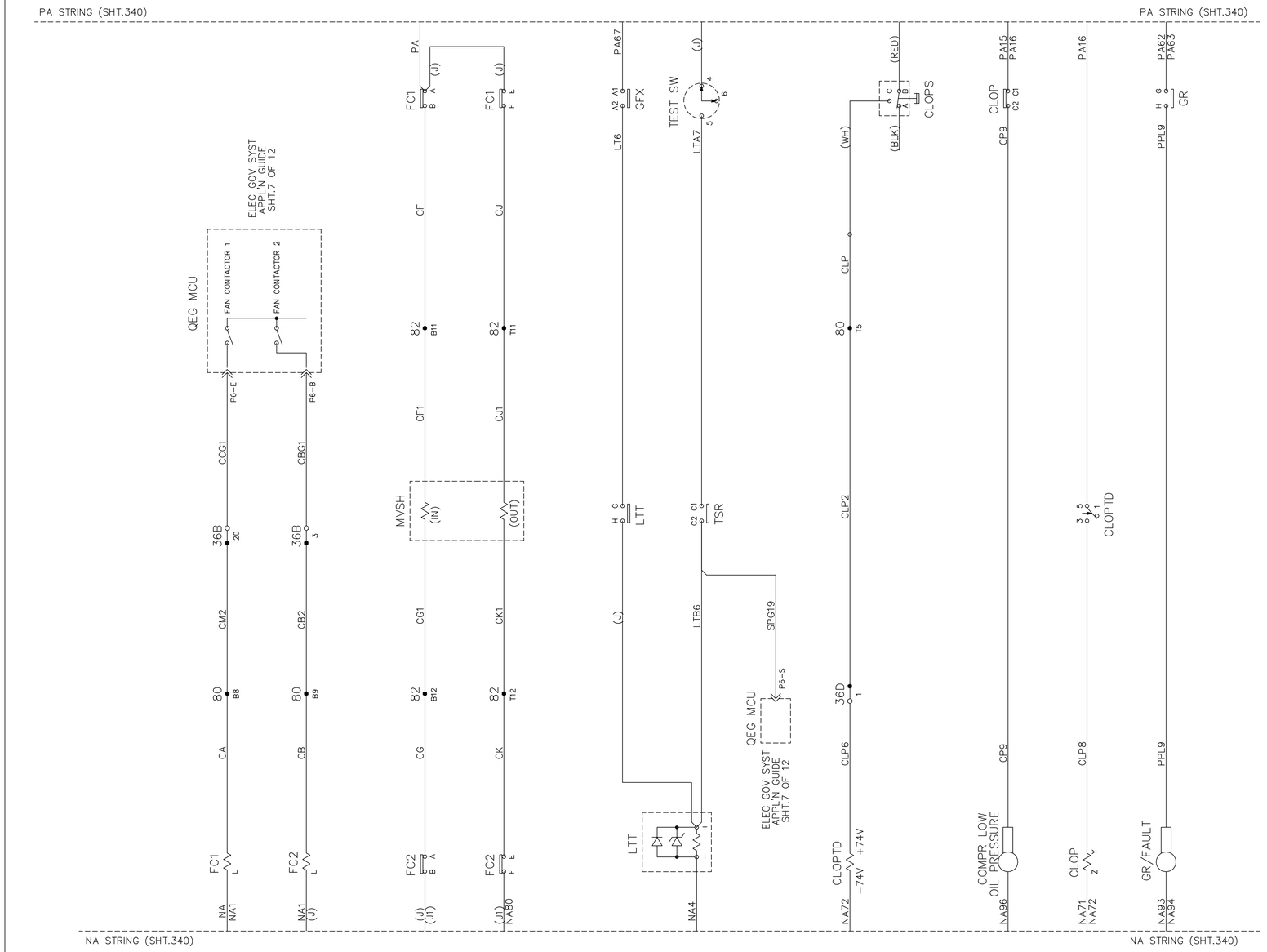

ENGINE COOLING & PROTECTION

62-D-308 REV A SHT. 390 OF 700

ROOM 507

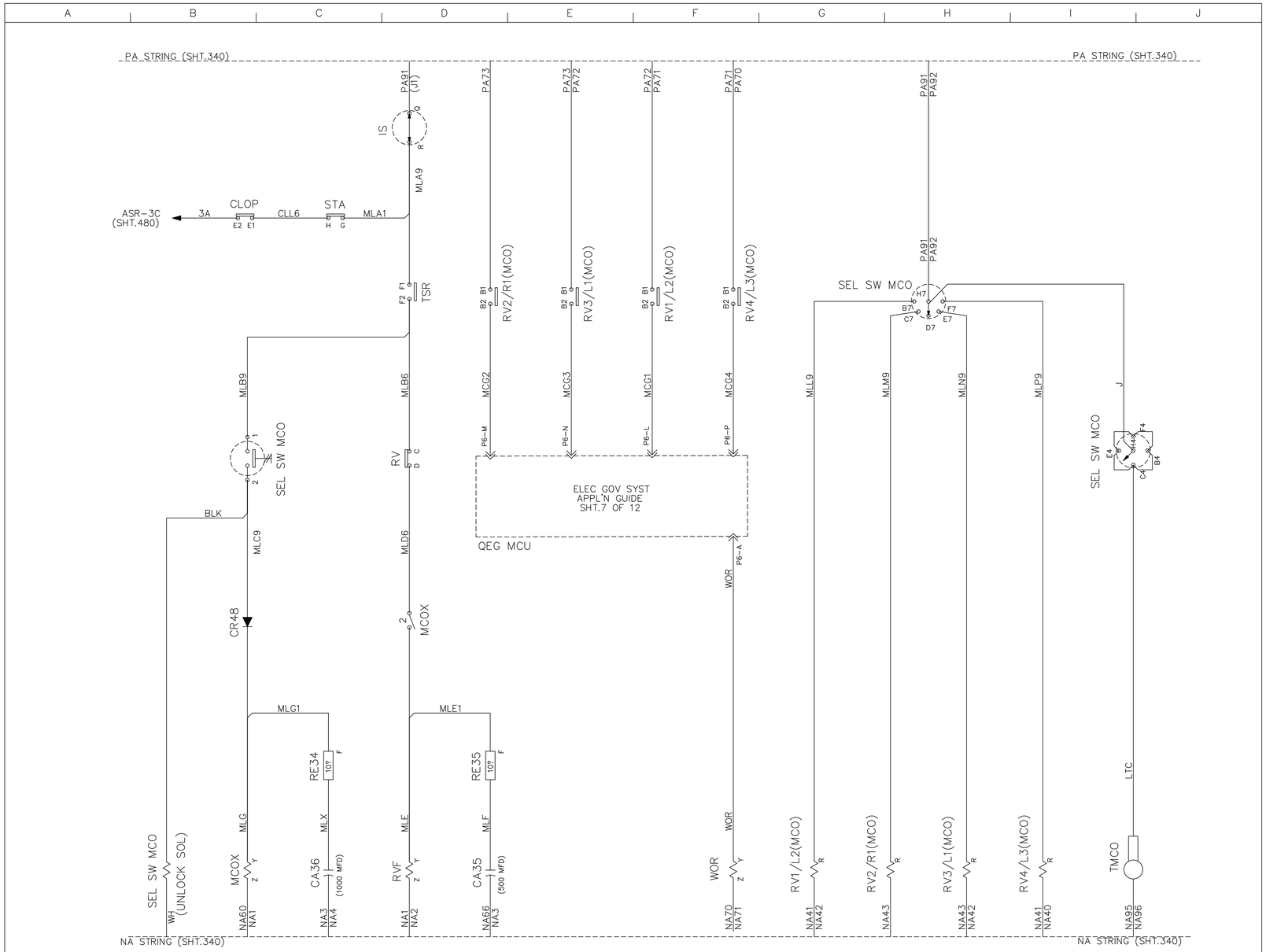

TRACTION MOTOR CUTOUT CONTROL | 62-D-308 | REV A | SHT. 400 OF 700

ROOM 507

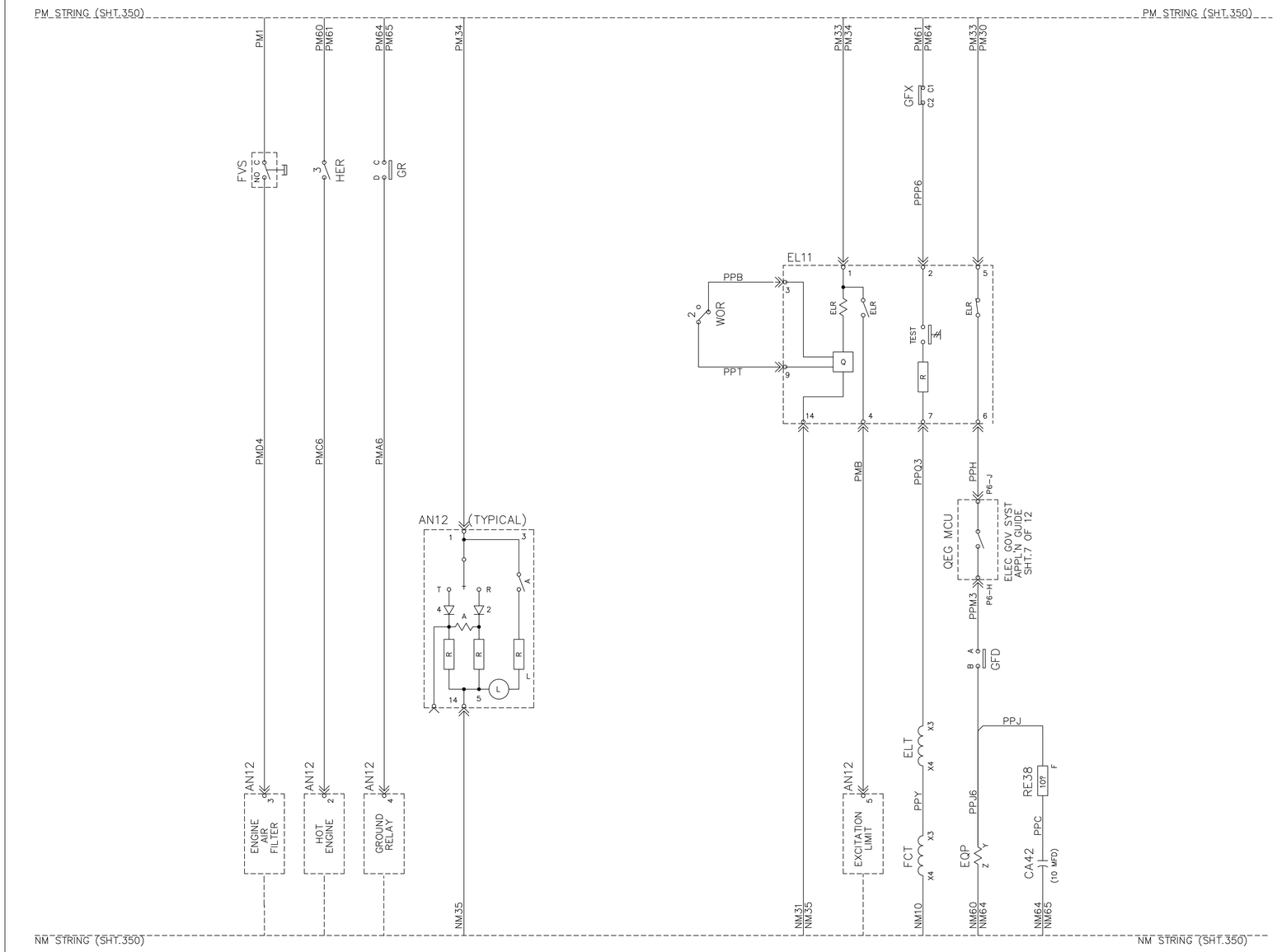

PROTECTION

62-D-308 REV A SHT. 410 OF 700

ROOM 507

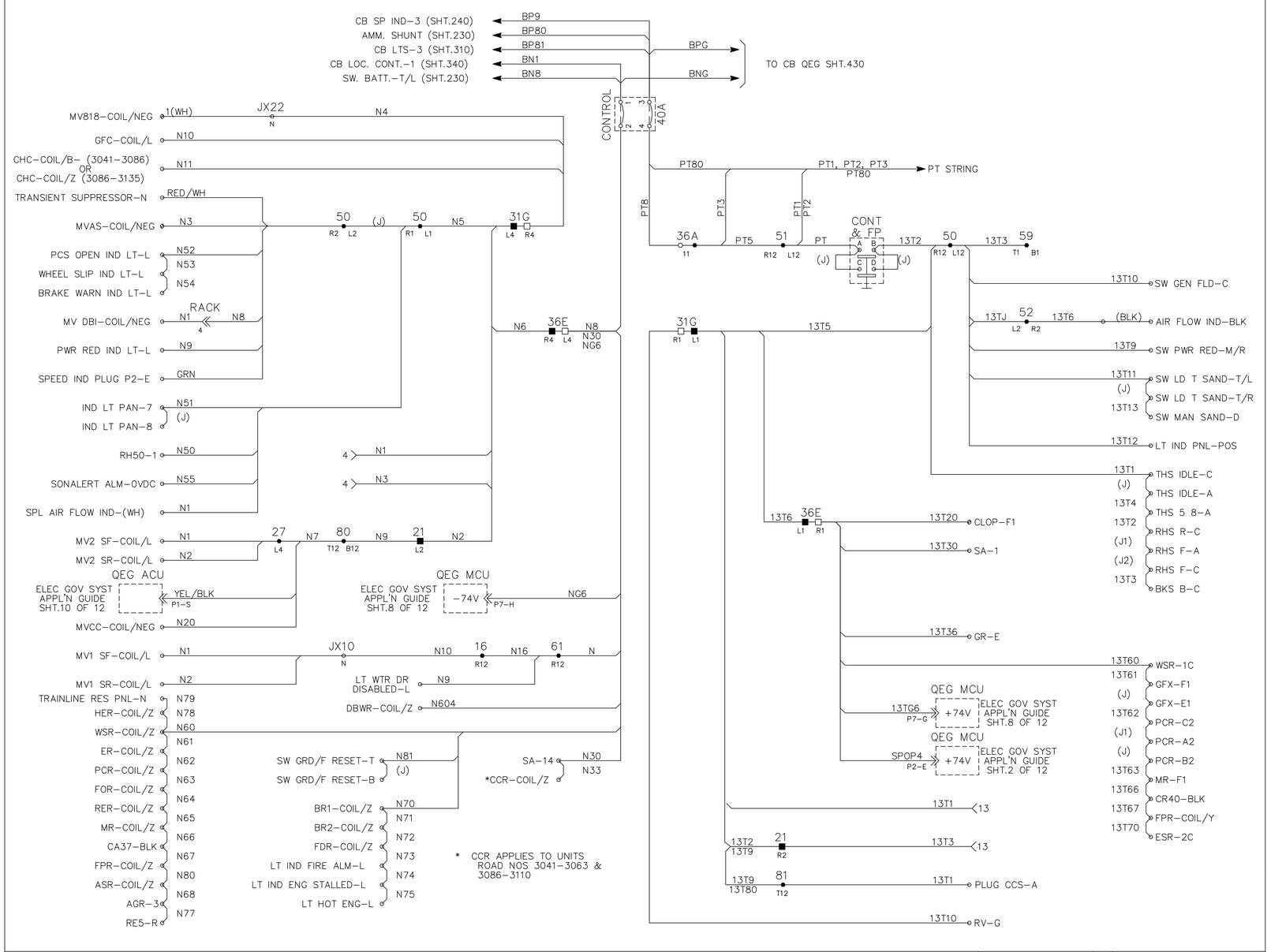

13T,PT & N STRING

62-D-308 REV A SHT. 420 OF 700

ROOM 507

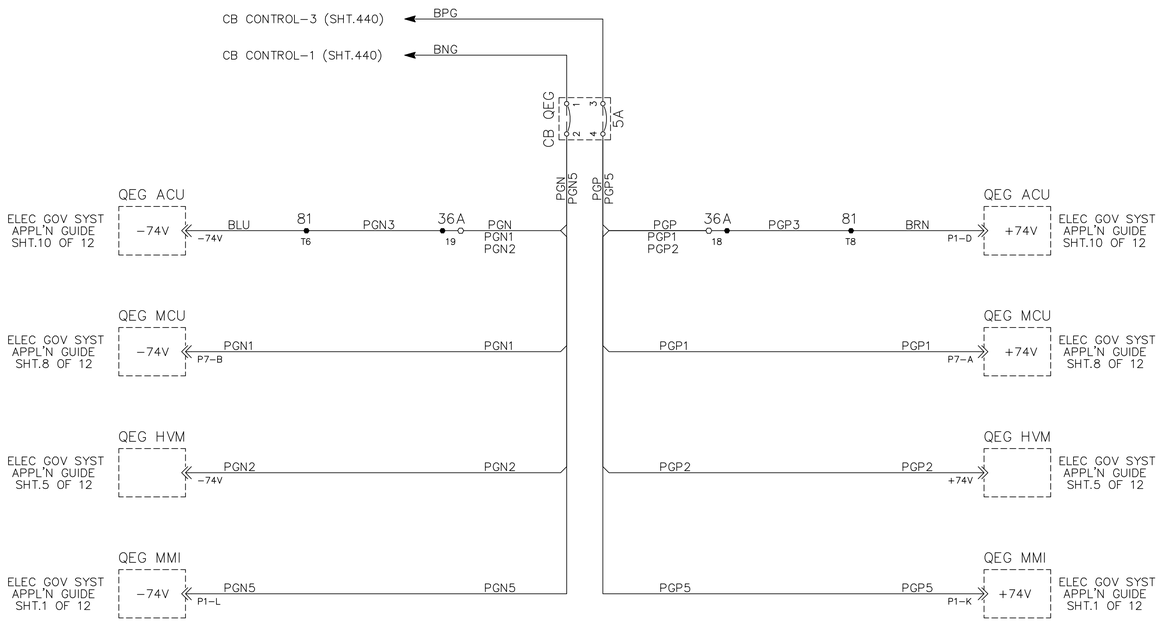

CB & PWR FOR QEG EQUIPMENT

62-D-308 REV A SHT. 430 OF 700

ROOM 507

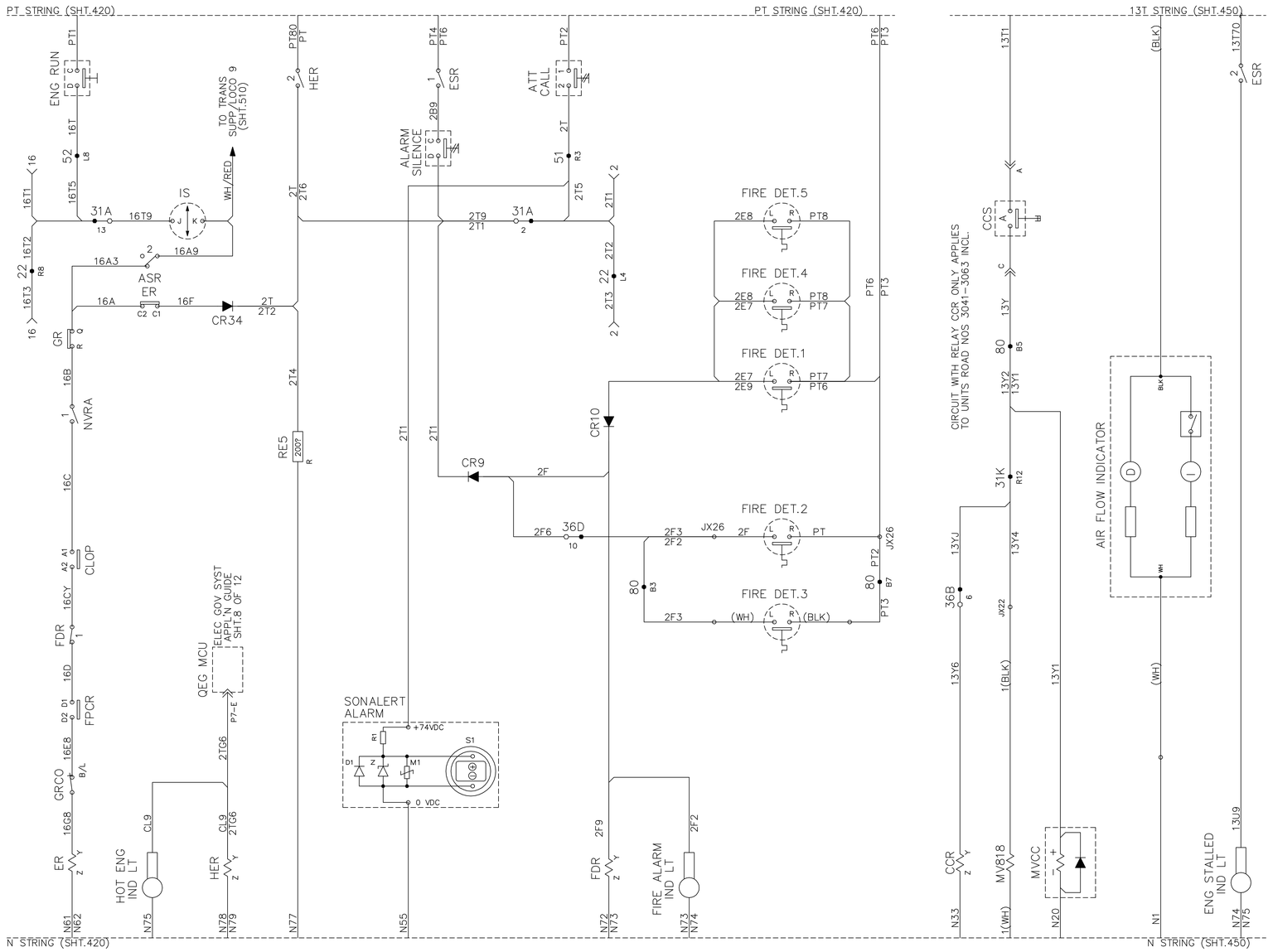

ENG RUN, ALARM, GRD RLY & COMP SYNC CONTROL

62-D-308 REV A SHT. 440 OF 700

ROOM 507

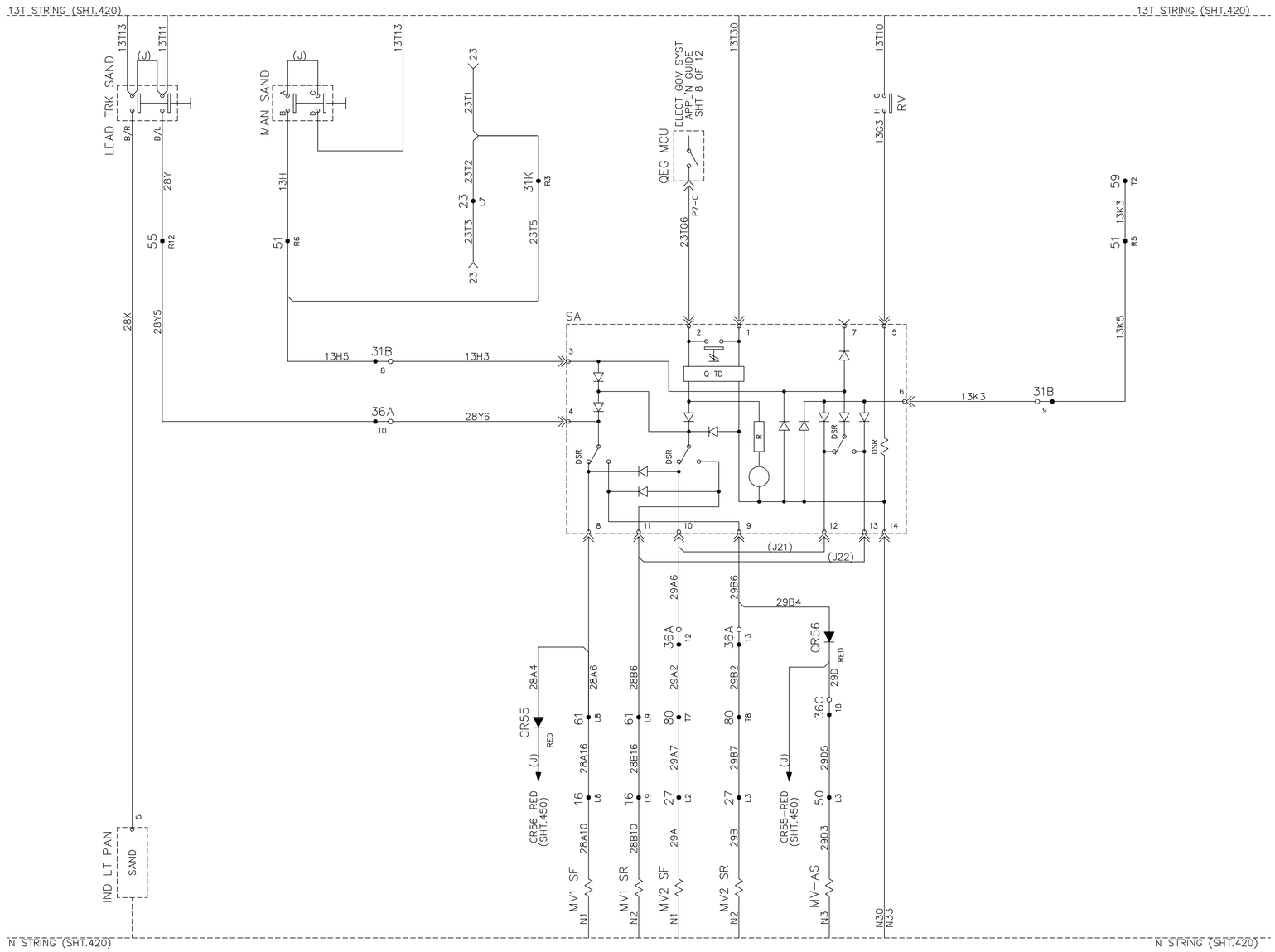

SANDING CONTROL | 62-D-308 | REV A | SHT. 450 OF 700

ROOM 507

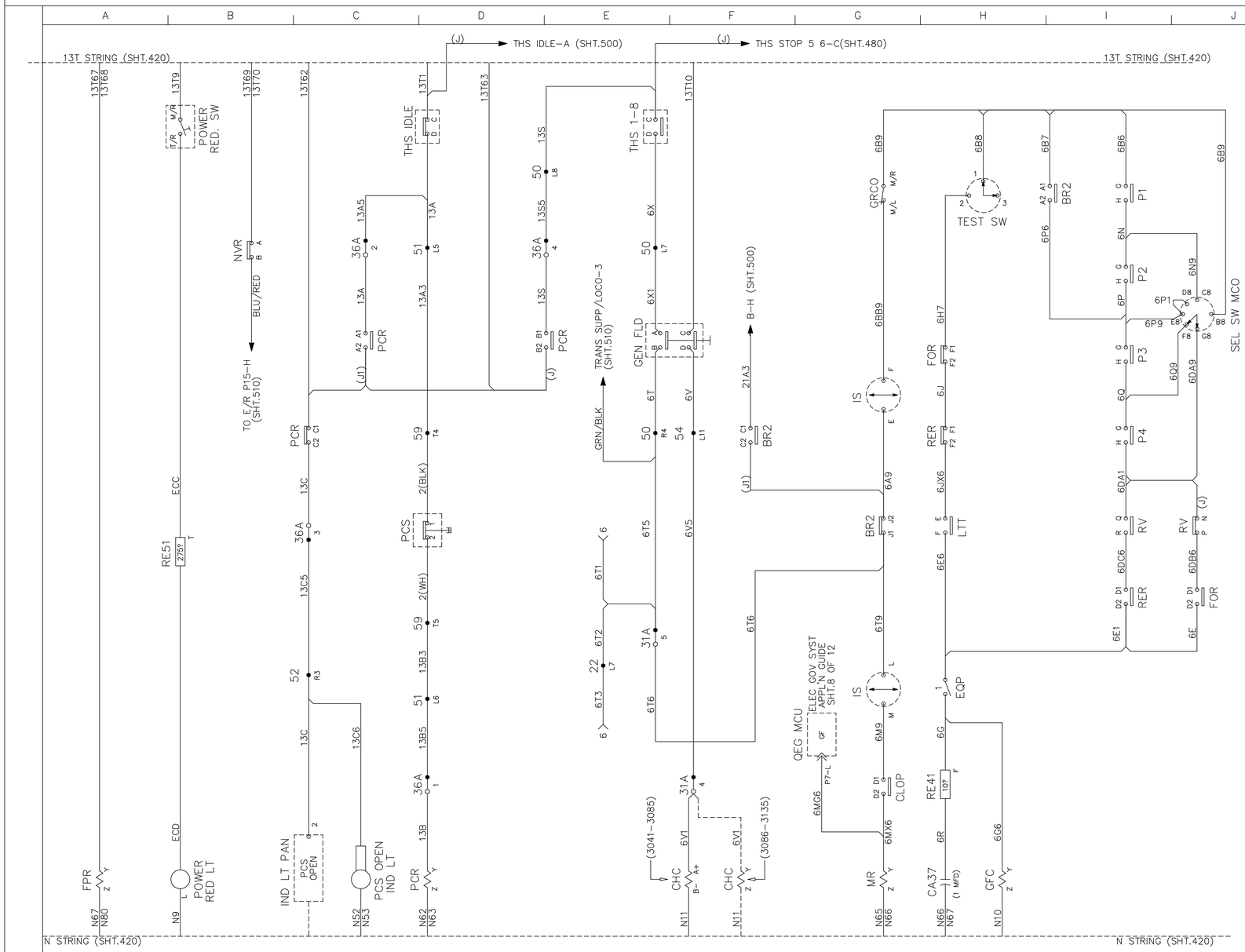

PC RESET & GEN. FLD. CONTROL | 62-D-308 | REV A | SHT. 460 OF 700

ROOM 507

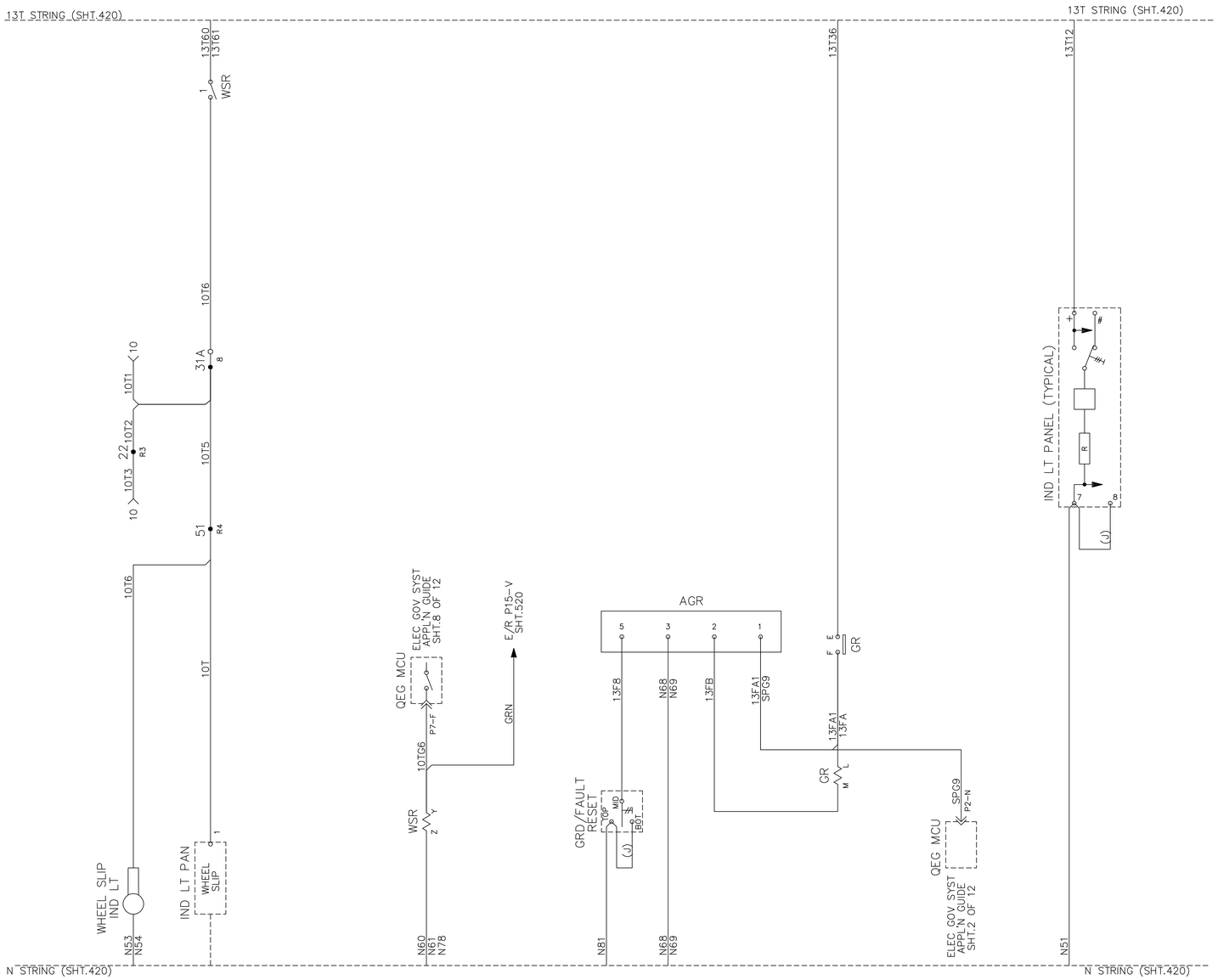

WHEEL SLIP, GRD RELAY RESET & IND LT PNL

62-D-308 REV A SHT. 470 OF 700

ROOM 507

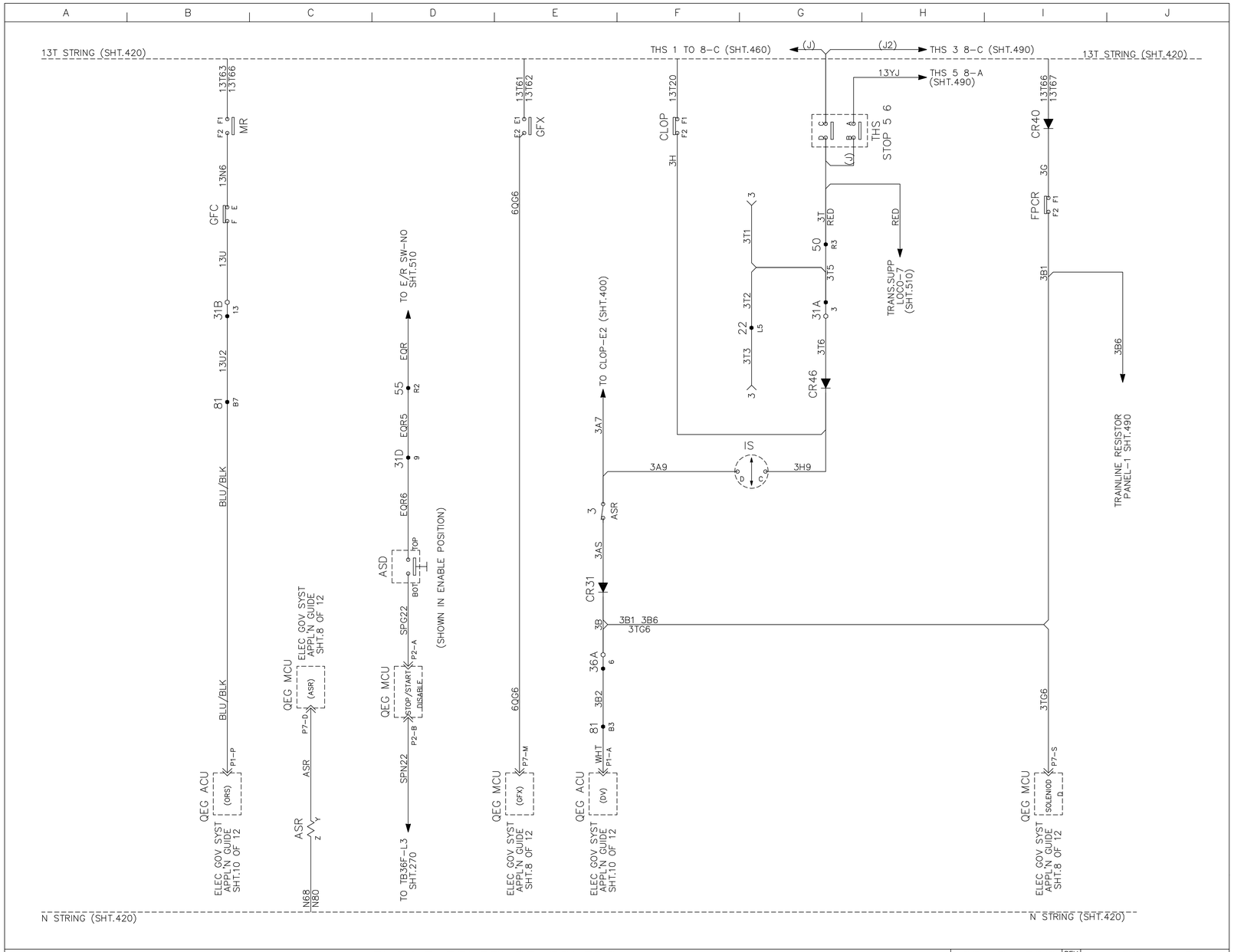

ENGINE GOVERNOR CONTROL | 62-D-308 | REV A | SHT. 480 OF 700

ROOM 507

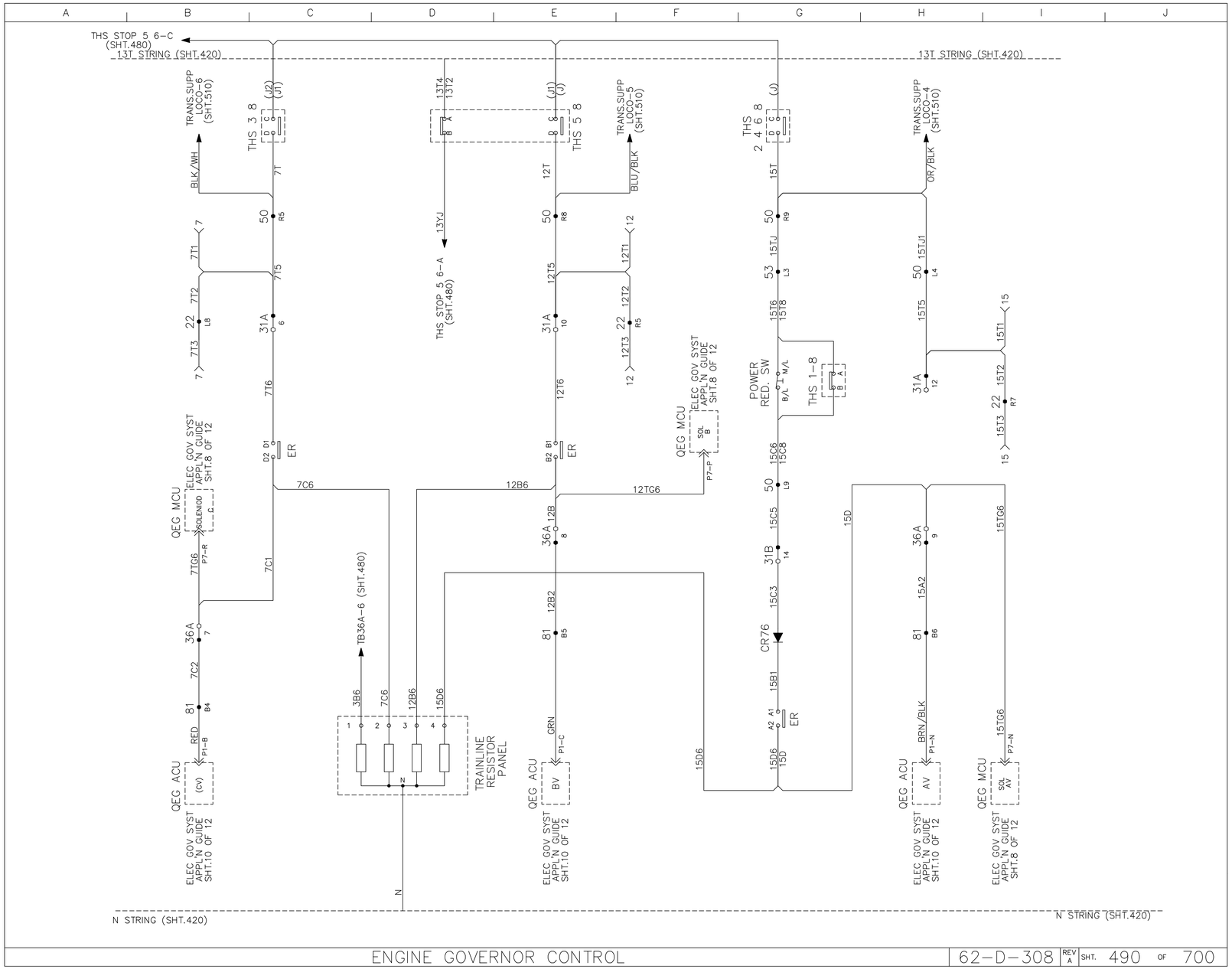

ENGINE GOVERNOR CONTROL | 62-D-308 | REV A | SHT. 490 OF 700

ROOM 507

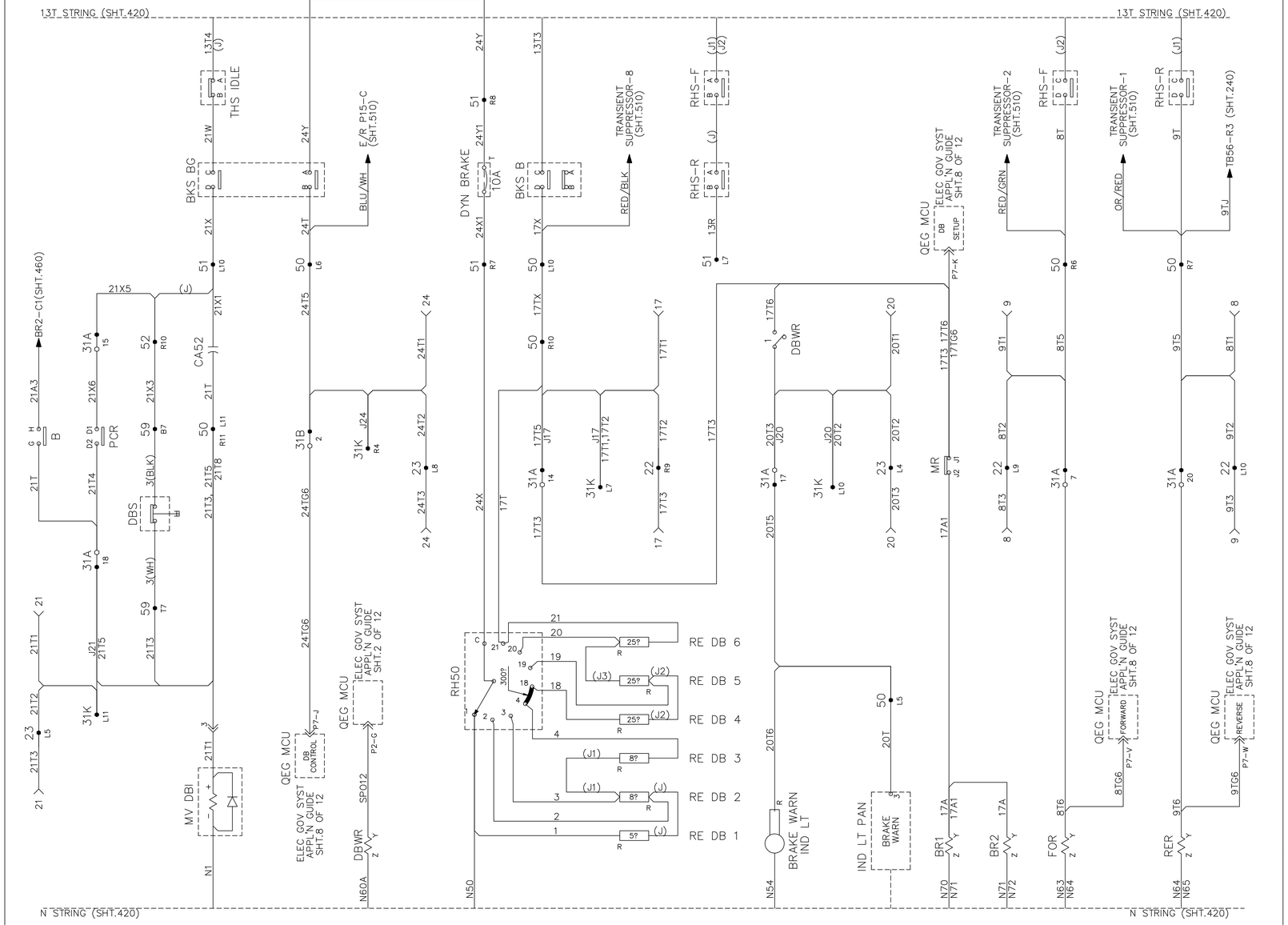

DB CONTROL & DIRECTION | 62-D-308 | REV A | SHT. 500 OF 700

ROOM 507

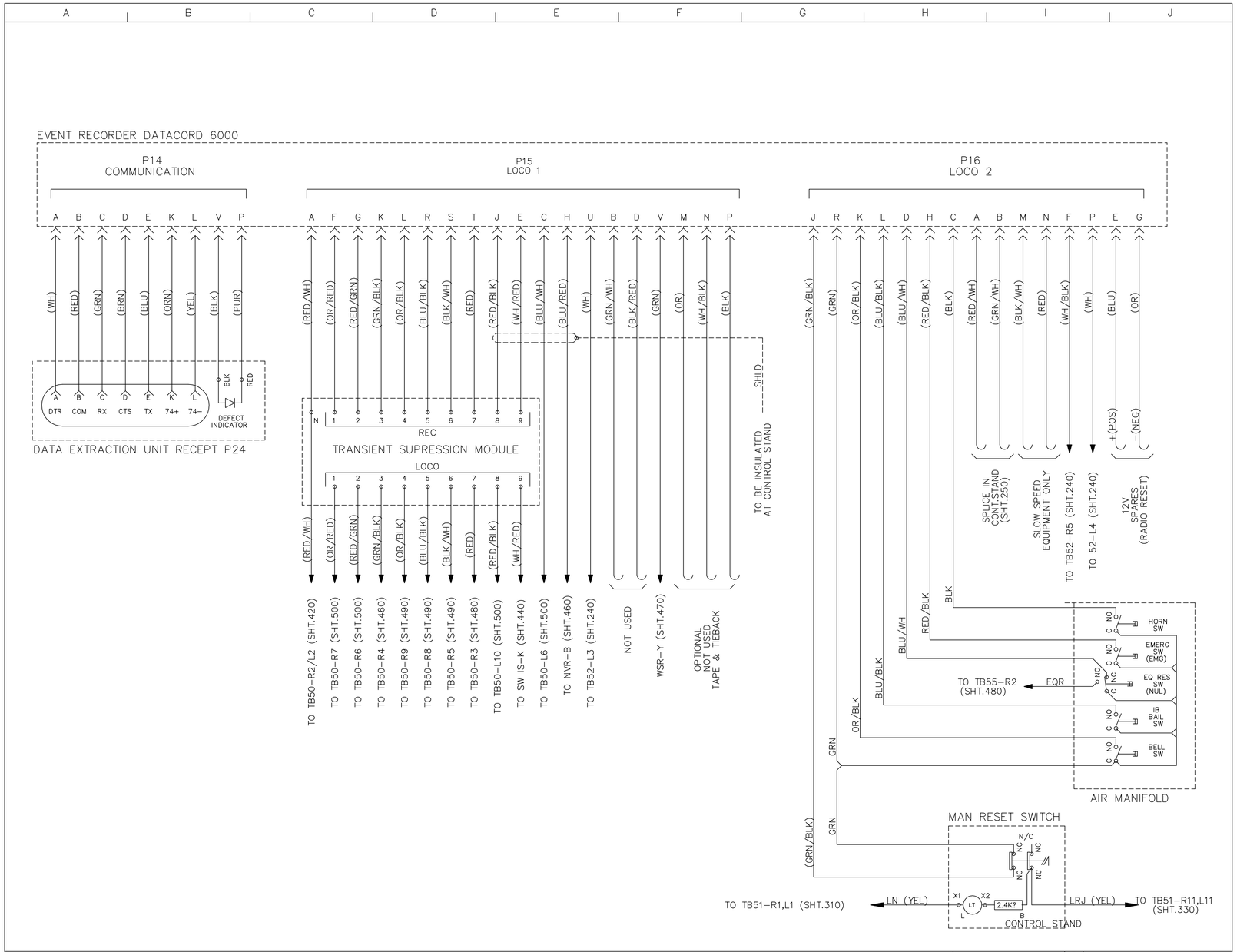

EVENT RECORDER – P14,P15 & P16 | 62–D–308 | REV A | SHT. 510 OF 700

ROOM 507

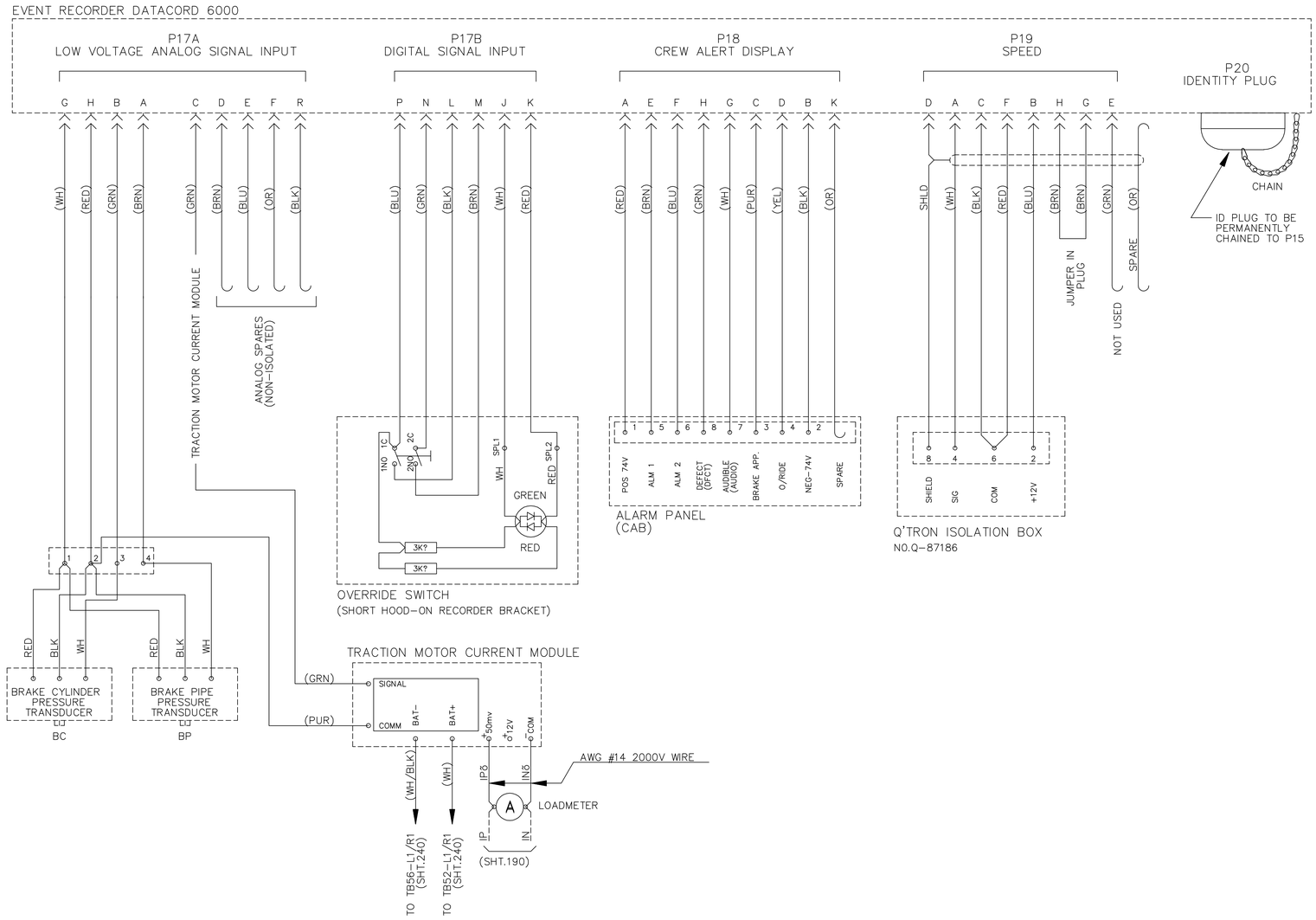

EVENT RECORDER – P17A, P17B, P18, P19 & P20

62-D-308 REV A SHT. 520 OF 700

ROOM 507

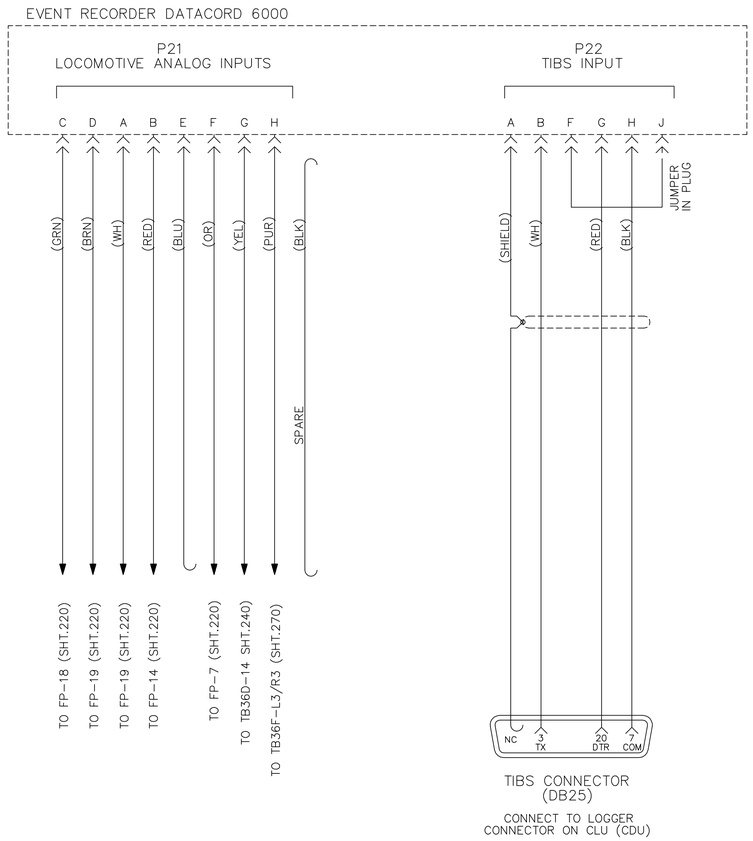

EVENT RECORDER – P21 & P22

62-D-308 REV A SHT. 530 OF 700

ROOM 507

A | B | C | D | E | F | G | H | I | J

LEGEND

ARROW INDICATES WIRE LEAVES ENCLOSURE

CIRCLE INDICATES WIRES CONNECT TO TERMINAL BOARD OR SPLICE

REPRESENTS STANDOFF INSULATOR

REPRESENTS CONDUIT

ALL SPLICES & CONNECTIONS ARE TO BE MADE IN FITTINGS & JUNCTION BOXES

NO SPLICES OF ANY KIND TO BE IN CONDUIT

USE SYMBOL 14E (8470754) IN CONDUIT DIAGRAM UNLESS OTHERWISE SPECIFIED.

WIRE TAGS IN PARENTHESIS ARE NOT TAGGED

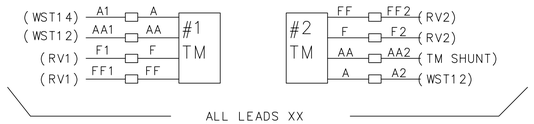

SHORT HOOD

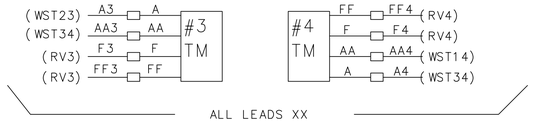

LONG HOOD

LIGHTING SYMBOLS

C	CAB LT 30W 75V
CL	CLASS LT 30W 75V
ER	ENG RM LT 50W 75V
H	HOOD LT 50W 75V
N	NUMBER LT 25W 75V
P	PLATFORM LT 50W 75V
SL	STEP LT 25W 75V
W	WALKWAY LT 25W 75V
G	GROUND LT 25W 75V
EC	ELECT. CAB'T 50W 75V

WIRE AND CABLE

SYMBOL	CABLE SIZE AWG/CM	CABLE SIZE STRAND	DIAMETER OUTSIDE	DIAMETER BARE	TYPE OF INSULATION	PART NO.
IE	#12 AWG	37/.0133	.180	.085	EXANE	8460547
IIE	14,950	37/24	.250	.140	EXANE	9094884
IIIE	36,760	91/24	.344	.234	EXANE	9094885
IVE	50,500	125/24	.395	.285	EXANE	9094886
VI	211,600	2100/30	.865	.640	EPR & HY	8421416
IXE	131,900	325/24	.600	.470	EXANE	9094888
8H	16,500	133/.0111	.340	.162	S.R.G & D	8443325
XI	444,400	1100/24	1.205	.870	EPR & HY	8421211
XIH	444,400	1100/24	1.140	.916	S.R.G & D	8333126
XII	222,200	550/24	.910	.610	EPR & HY	8421209
XIV	313,100	775/24	1.070	.740	EPR & HY	8421210
XE	#14 AWG	37/30	.160	.073	EXANE	8460546
XXE	535,300	1325/24	1.260	.978	EXANE	8462288
XX	535,300	1325/24	1.360	.970	EPR & HY	8421212
XXIIE	90,900	225/24	.520	.390	EXANE	9094887
XXVI	646,400	1600/24	1.470	1.060	EPR & HY	8421213
XXX	777,700	1925/24	1.570	1.120	EPR & HY	8421214
3H	#3 AWG	133/.0199	.480	.296	S.R.G & D	8376487
6H	26,200	133/.0140	.400	.216	S.R.G & D	8405158
16E	#16 AWG	19/29	.122	.058	EXANE	8466844
18E	#18 AWG	19/.0092	.108	.045	EXANE	8466845
16T	#16 AWG	19/29	.090	.063	TEFLON	8269142
18T2	#18 AWG	19/30	.094	.050	TEFLON	8453180
C2	#16 2 COND	65/34	.410	.059	NEOPRENE	8077432
T2	#16 2 COND	65/34	.390	.063	S.R.G. & D	8337786
W2	#14 2 COND	41/30	.530	.078	NEOPRENE	8077433
J3	#14 3 COND	41/30	.600	.082	NEOPRENE	8183415
T3	#16 3 COND	65/34	.440	.063	S.R.G. & D	8337787
#25	#25 AWG		.144		PLAS SHLD	8284005
RG213/U	COAXIAL		.405		PVC	6943127
C5	#16 5 COND	65/34	.550	.059	NEOPRENE	8243381
14E	#14 AWG	37/30	.130	.075	EXANE	8470754
XIVE	313,100	775/24	.930	.720	EXANE	9094890
S2	16 2 COND	105/36	.340	.060	NEOPRENE	6943128
10HE	#10 AWG	27/24	.213	.125	EXANE	9530744
E18	18COND SHLD		.398		PVC	6965851
B7	#18 7 COND		.320		VINYL	8499606

10HE PT#	I I E	14E PT#	14E PT#	I E PT#
N1 (4)	BN1	1T1 (1)	12T1 (12)	
	SPF10	2T1 (2)	14T1 (14)	6T1 (6)
		3T1 (3)	15T1 (15)	8T1 (8)
		5T1 (5)	20T1 (20)	9T1 (9)
		7T1 (7)	21T1 (21)	13T1 (13)
		10T1 (10)	22T1 (22)	16T1 (16)
		11T1 (11)	23T1 (23)	17T1 (17)
		LS17	24T1 (24)	18T1 (18)
		LN17	26T1 (26)	19T1 (19)
		LS18	27T1 (27)	25T1 (25)
		LN18		DT1
				DS1

A

RPX10	RPZ10	
RNX10	RNZ10	
FH1	FK1	
LP5	N2	
HC10	N1	
HB10	28B10	
HA10	28A10	
HG4	LN4	
HE4	LD10	HN10
14E	14E	I E

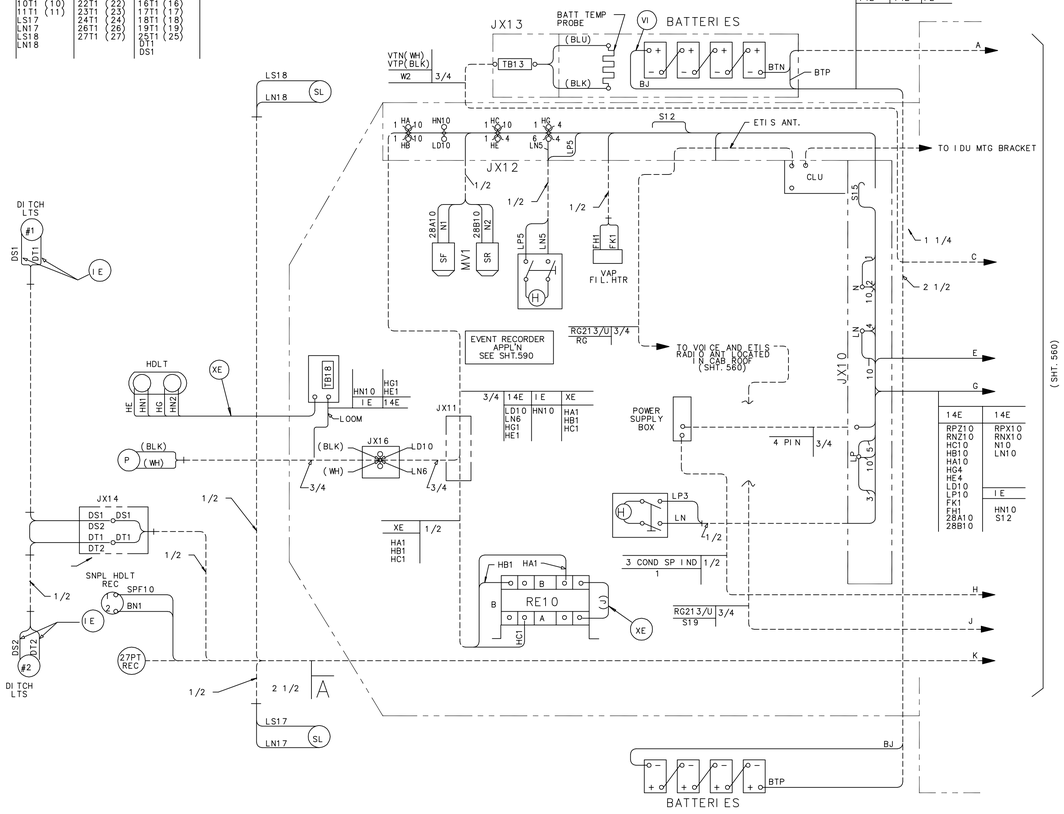

14E	14E
RPZ10	RPX10
RNZ10	RNX10
HC10	N10
HB10	LN10
HA10	
HG4	
HE4	
LD10	I E
LP10	
FK1	
FH1	HN10
28A10	S12
28B10	

REFERENCE ONLY

SHORT HOOD | 62-D-308 | REV A | SHT. 550 OF 700

ROOM 507

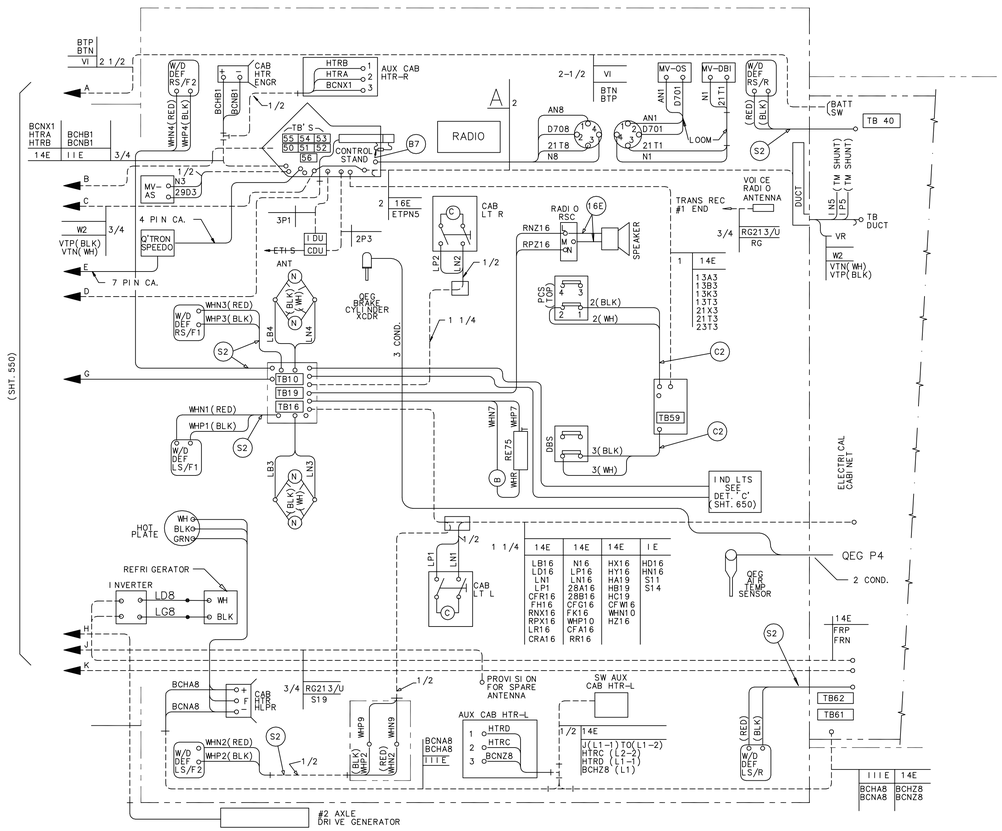
RADIO
CONTROL STAND
TB'S
CAB HTR ENGR
AUX CAB HTR-R
MV-OS
MV-DBI
W/D DEF RS/R
BATT SW
TB 40
VOICE RADIO ANTENNA
TRANS REC #1 END
RG213/U RG
DUCT
TB DUCT
VR
VTN(WH) VTP(BLK)
CAB LT R
RADIO RSC
SPEAKER
RNZ16
RPZ16
PCS (TOP)
DBS
TB59
IND LTS SEE DET. 'C' (SHT. 650)
ELECTRICAL CABINET
QEG P4
2 COND.
QEG DOR TEMP SENSOR
CAB LT L
HOT PLATE
REFRIGERATOR
INVERTER
LD8
LC8
CAB HTR HLPR
RG213/U S19
PROVISION FOR SPARE ANTENNA
SW AUX CAB HTR-L
AUX CAB HTR-L
HTRD
HTRC
BCNZ8
J(L1-1)TO(L1-2)
HTRC (L2-2)
HTRD (L1-1)
BCHZ8 (L1)
TB62
TB61
#2 AXLE DRIVE GENERATOR
W/D DEF LS/F2
W/D DEF LS/F1
W/D DEF RS/F1
W/D DEF RS/F2
W/D DEF LS/R
QEG BRAKE CYLINDER XCDR
O'TRON SPEEDO
MV-AS
4 PIN CA.
7 PIN CA.
3 COND.
(SHT. 550)

| | | |

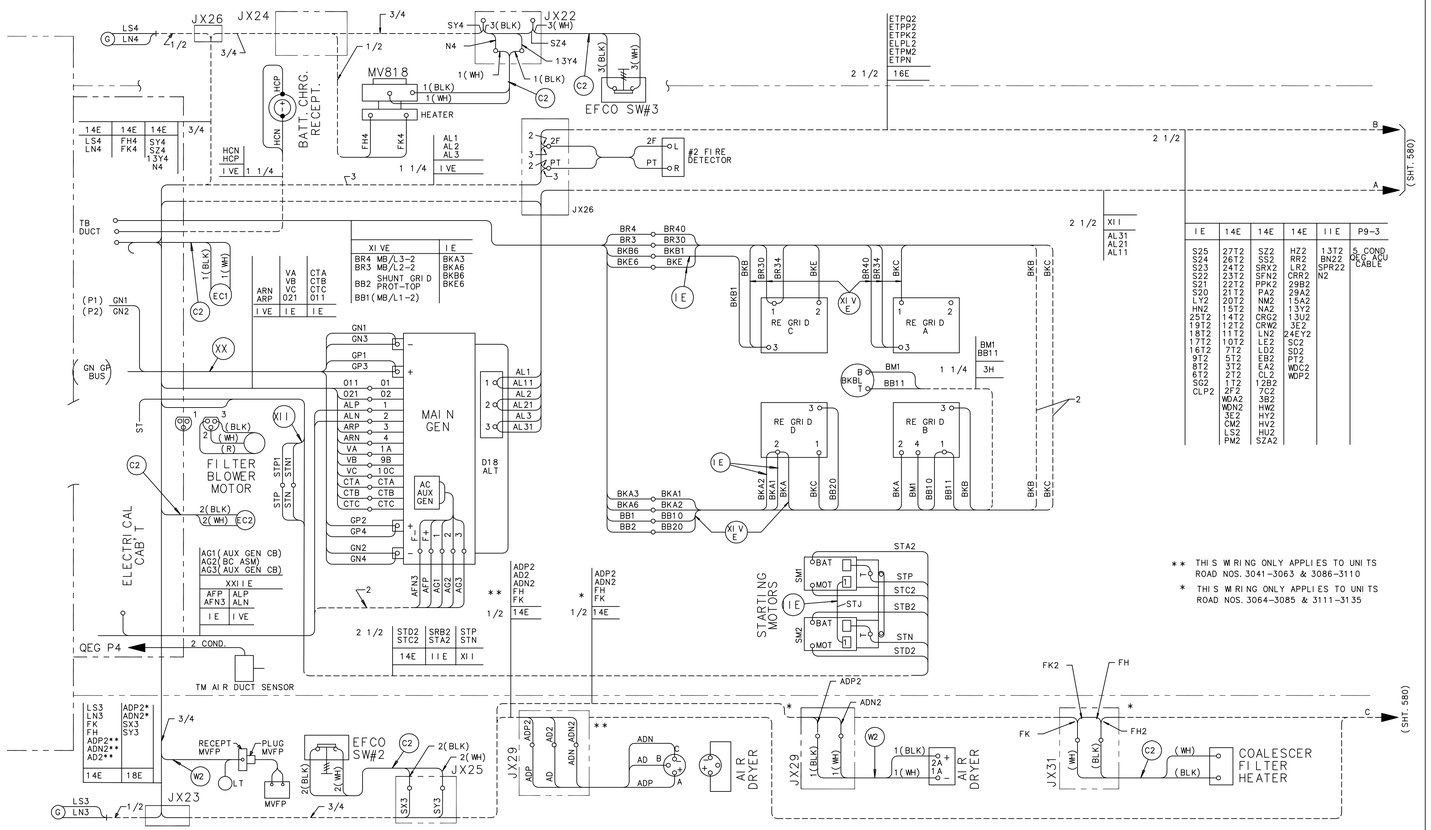

REFERENCE ONLY

LONG HOOD – MIDDLE	62-D-308	REV A	SHT. 570 OF 700

ROOM 507

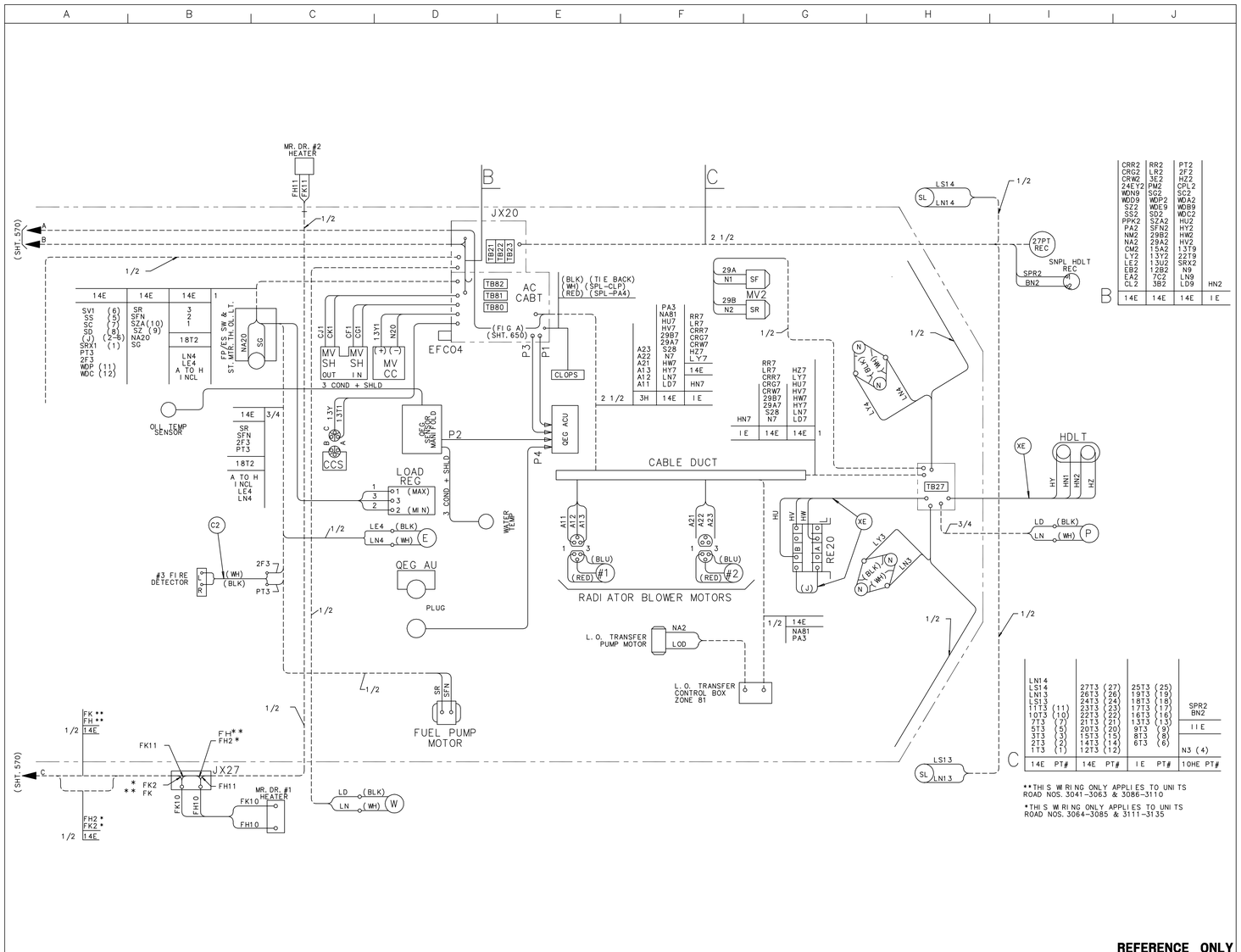

REFERENCE ONLY

LONG HOOD – NO. 2 END | 62-D-308 | REV A | SHT. 580 OF 700

ROOM 507

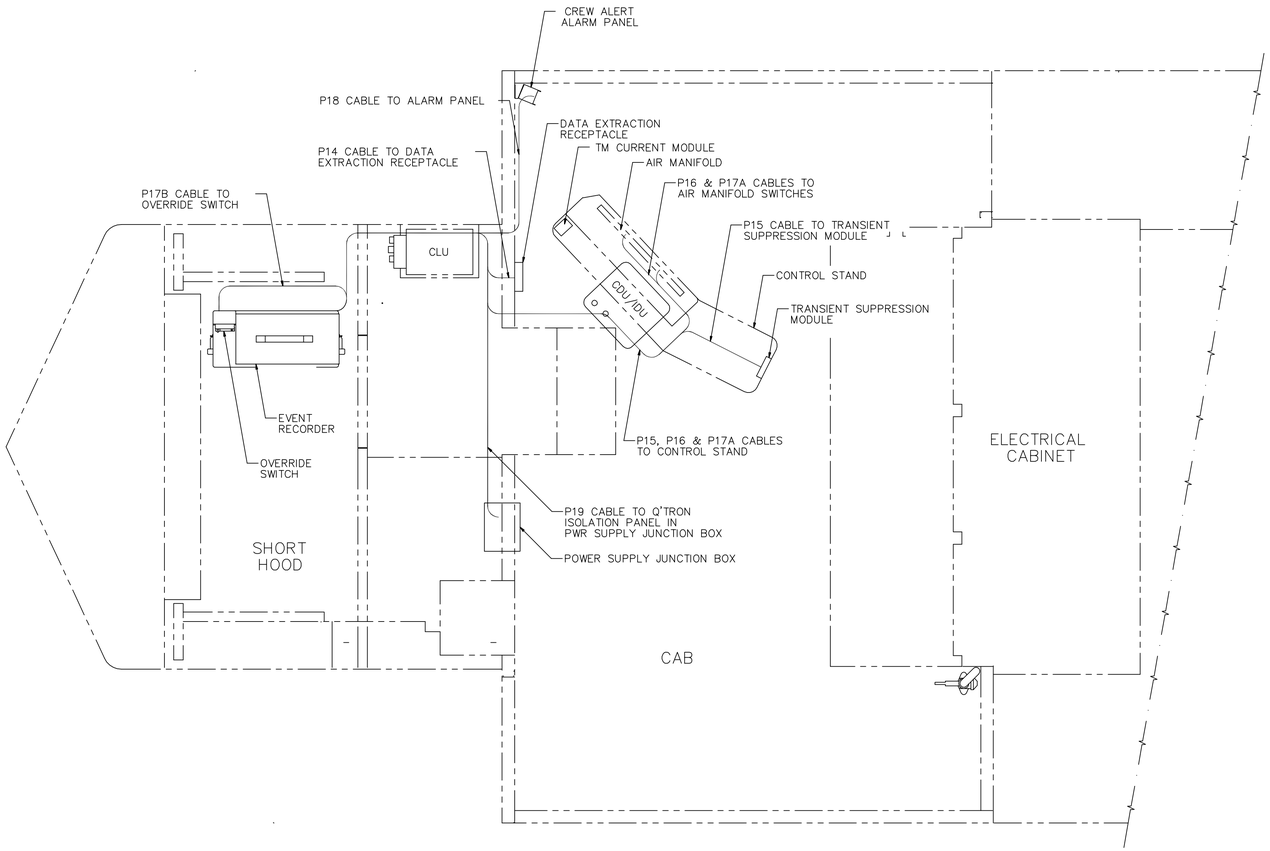

REFERENCE ONLY

SHORT HOOD & CAB – EVENT RECORDER | 62-D-308 | REV A | SHT. 590 OF 700

ROOM 507

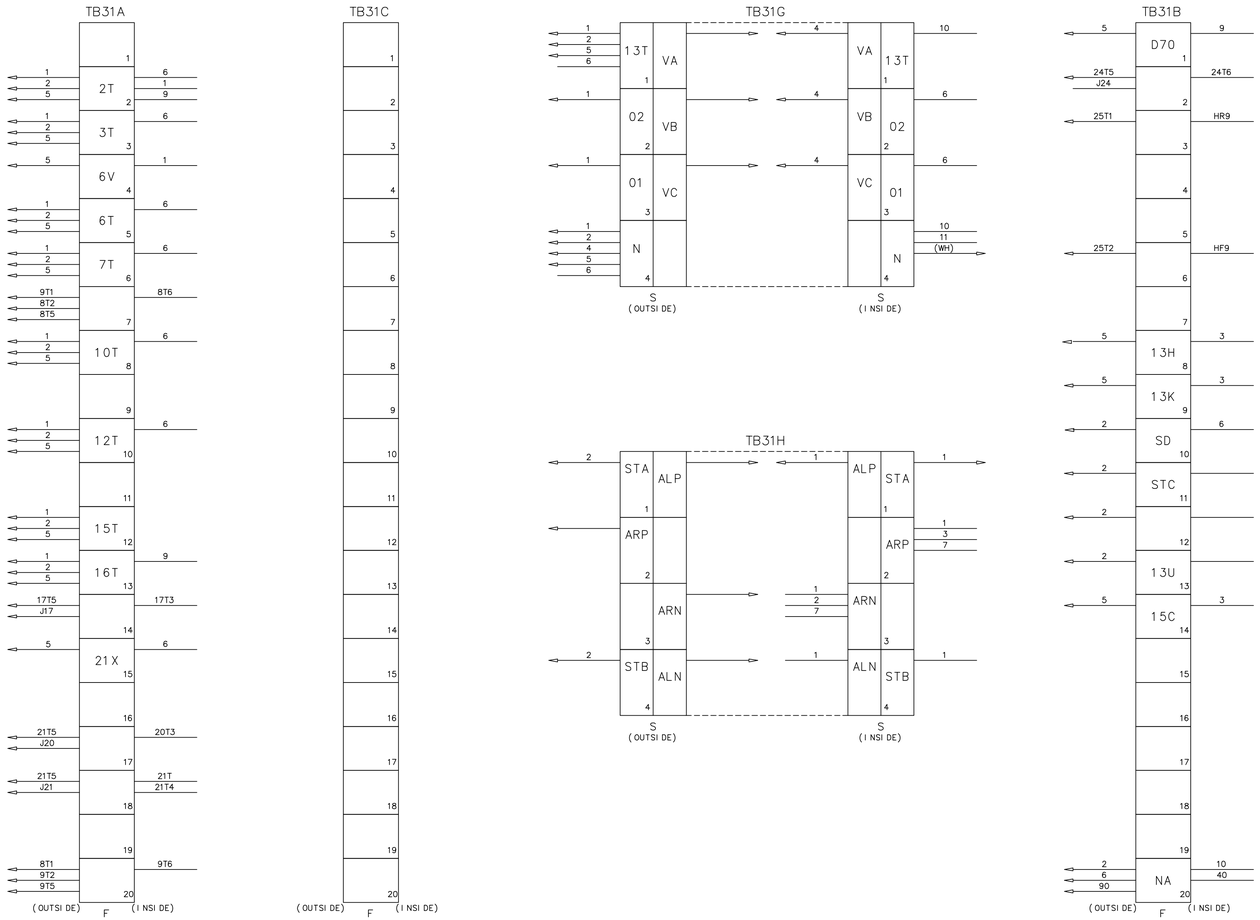

TERMINAL BOARD DUCT – ELECTRICAL CABINET | 62-D-308 | REV A | SHT. 600 OF 700

ROOM 507

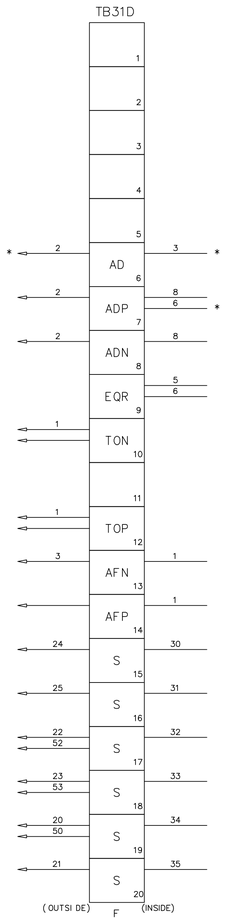

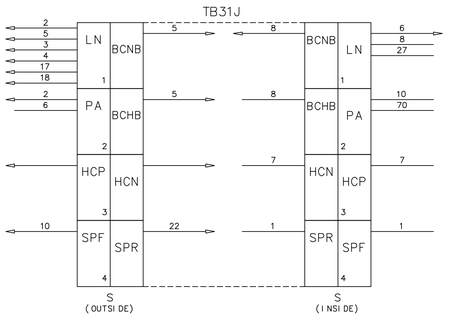

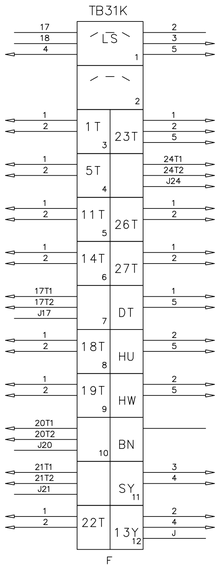

WIRING MARKED * APPLIES ONLY
TO UNITS, ROAD NOS. 3041-3063 INCL.

REFERENCE ONLY

TERMINAL BOARD DUCT - ELECTRICAL CABINET	62-D-308	REV A	SHT. 610 OF 700

ROOM 507

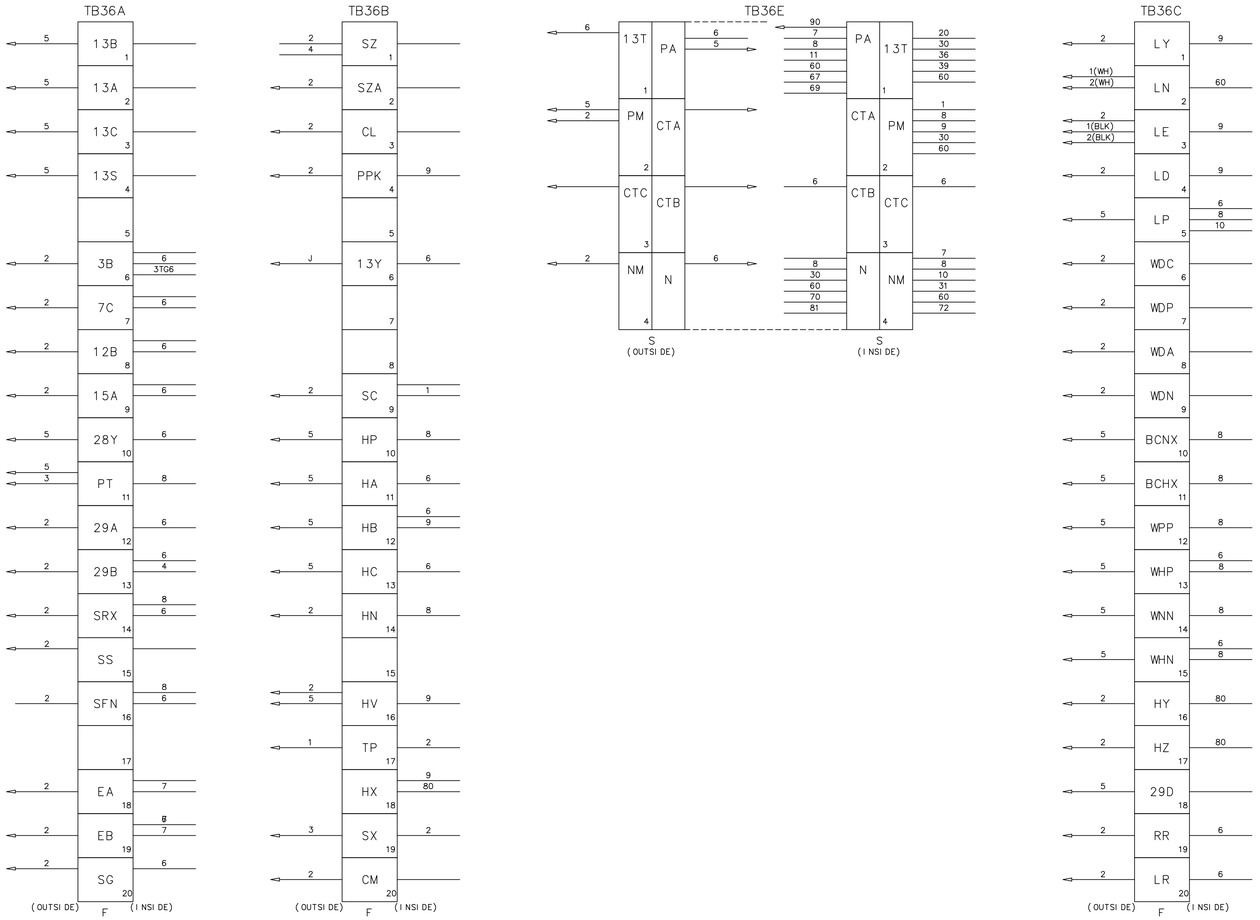

REFERENCE ONLY

TERMINAL BOARDS – MAIN CONTROL PANEL – ELECTRICAL CABINET | 62-D-308 | REV A | SHT. 620 OF 700

ROOM 507

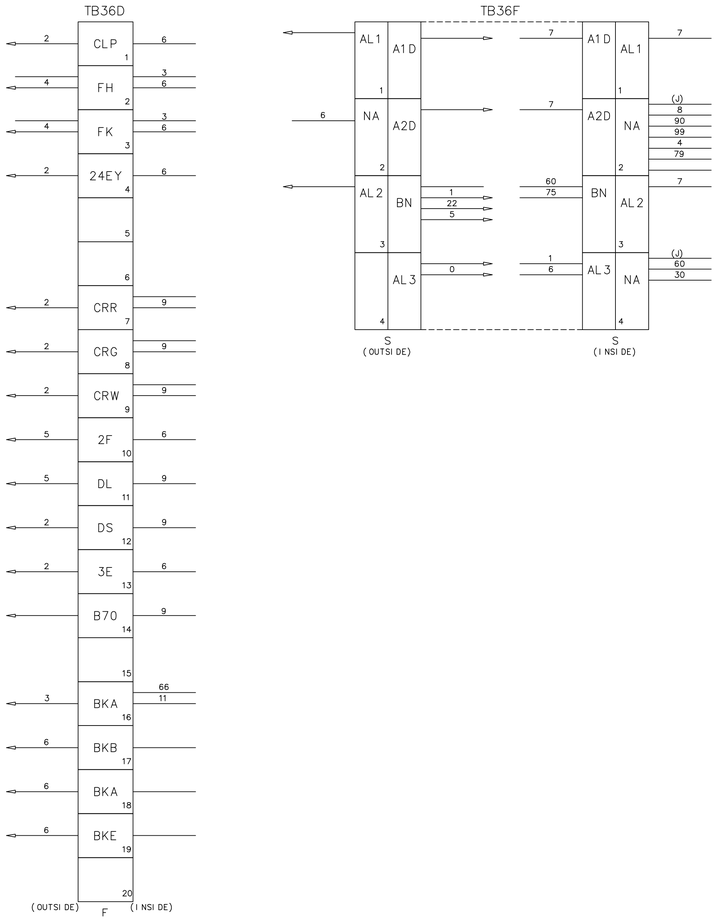

REFERENCE ONLY

TERMINAL BOARDS – MAIN CONTROL PANEL – ELECTRICAL CABINET | 62-D-308 | REV A | SHT. 630 OF 700

ROOM 507

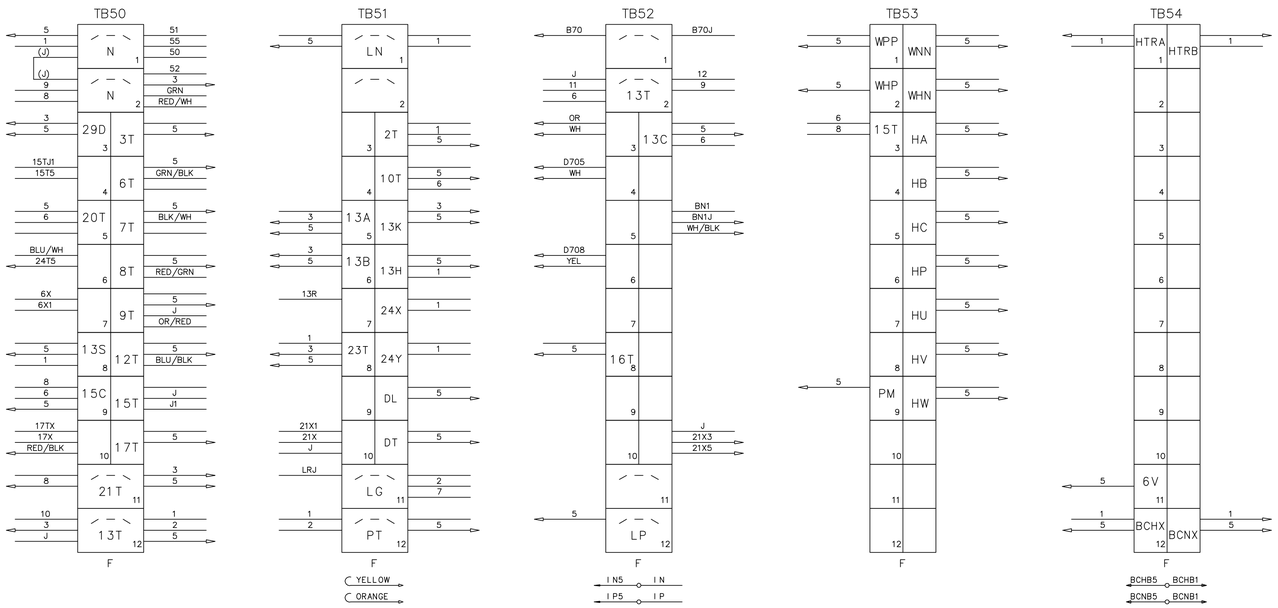

REFERENCE ONLY

TERMINAL BOARDS – CONTROL STAND | 62-D-308 | REV A | SHT. 640 OF 700

ROOM 507

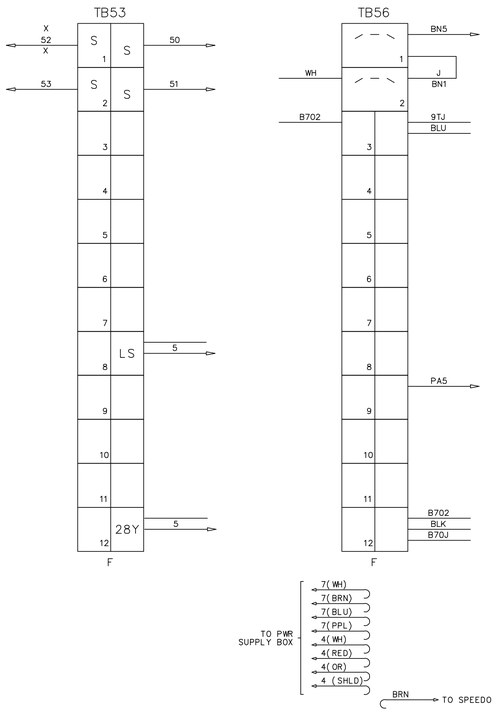

REFERENCE ONLY

TERMINAL BOARDS – CONTROL STAND | 62-D-308 | REV A | SHT. 650 OF 700

ROOM 507

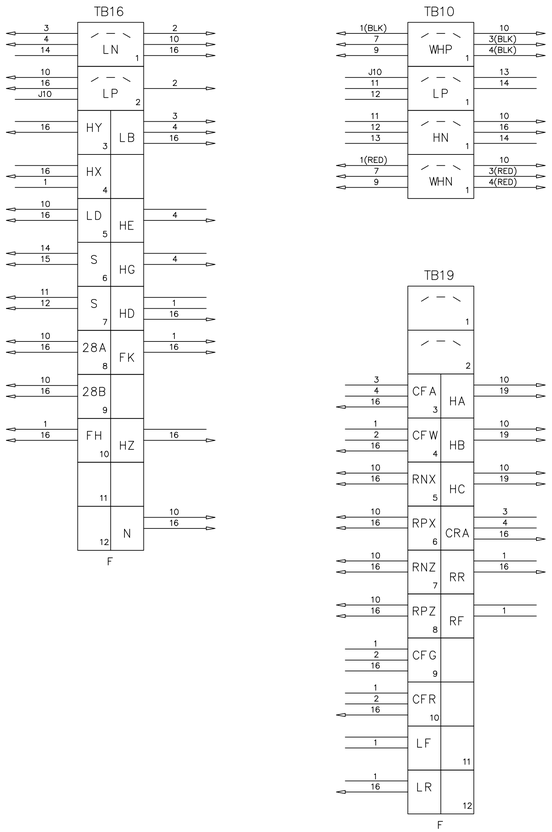

REFERENCE ONLY

TERMINAL BOARDS – MISC. (CAB & SHORT HOOD) | 62-D-308 | REV A | SHT. 660 OF 700

ROOM 507

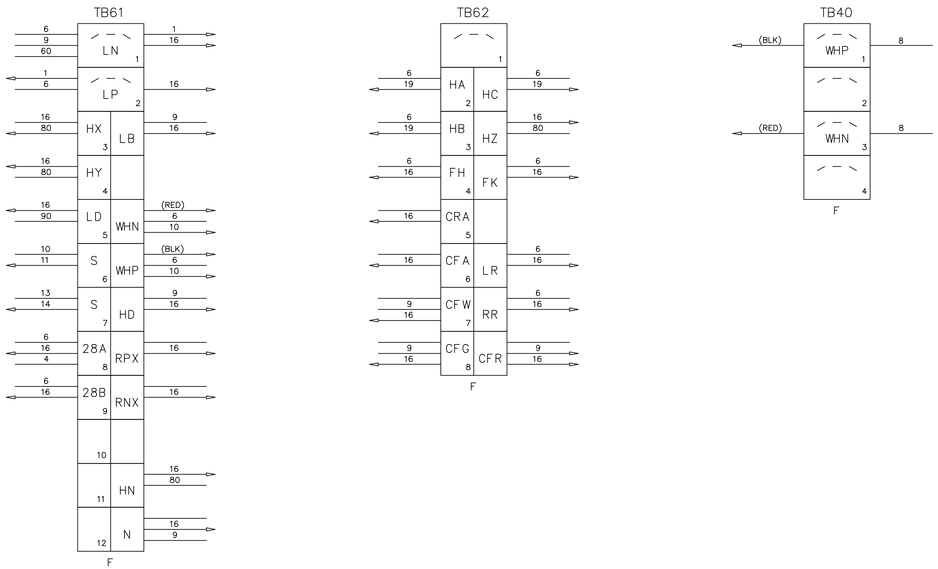

ELECTRICAL CABINET
(ABOVE MAIN CONTROL PANEL)

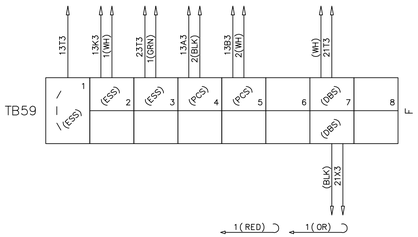

SUB BASE

REFERENCE ONLY

TERMINAL BOARDS – MISC (SUB BASE & ABOVE MAIN CONTROL PANEL) | 62-D-308 | REV A | SHT. 670 OF 700

ROOM 507

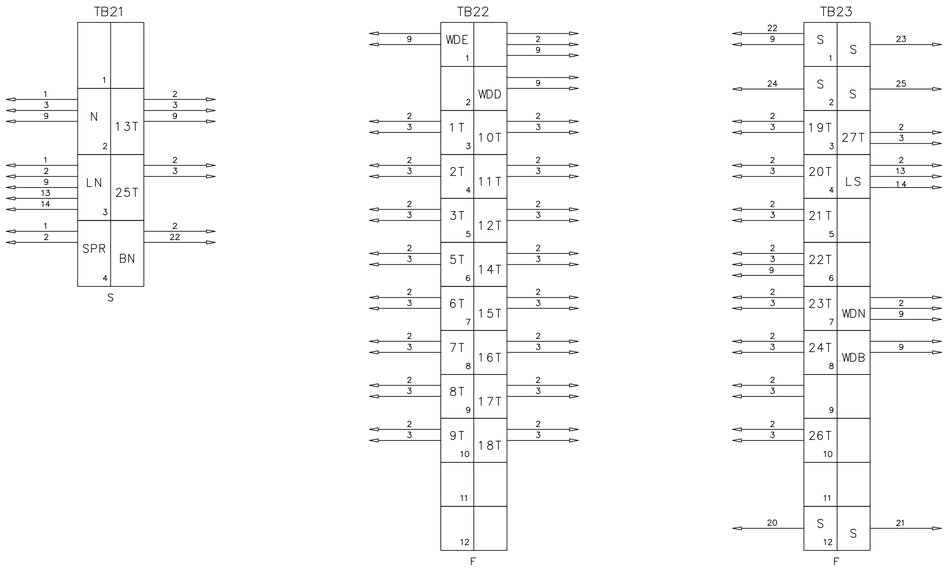

JUNCTION BOX 20

REFERENCE ONLY

TERMINAL BOARDS – JUNCTION BOX 20	62-D-308	REV A	SHT. 680 OF 700

ROOM 507

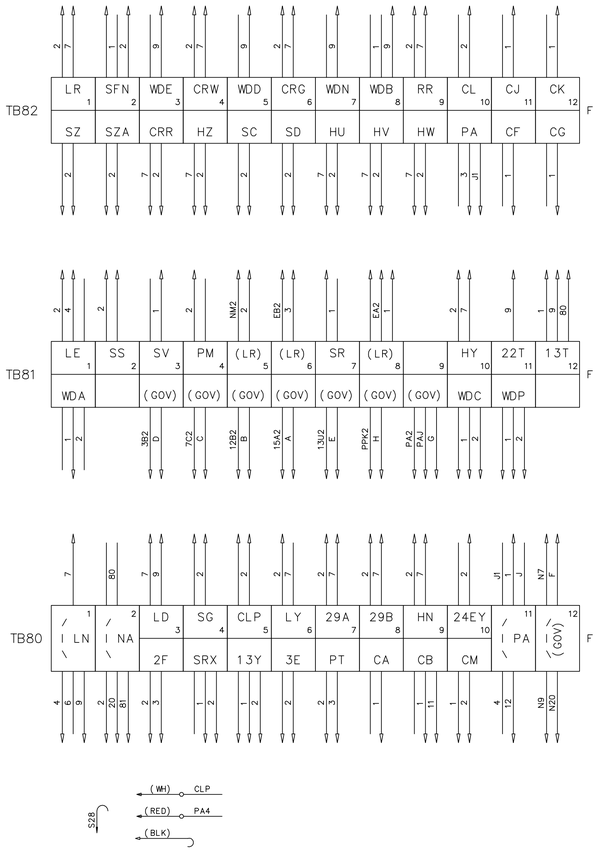

A C CABINET

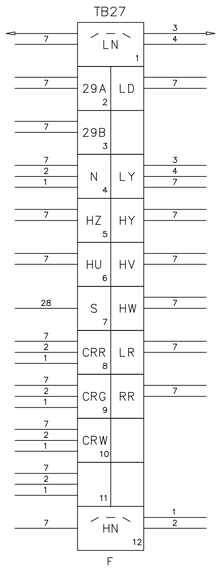

LONG HOOD NOSE

REFERENCE ONLY

TERMINAL BOARDS – AC CABINET & LONG HOOD NOSE | 62-D-308 | REV A | SHT. 690 OF 700

ROOM 507

MOD NUMBER	DESCRIPTION
1073	THERMAL DEVICE TO AR10 MAIN GENERATOR BEARING.
1086	REWIRE #998D 3.5KW CAB HEATER.
1100	RADIO RESET FUNCTION (REPLACED BY MOD MOD 1121)
1119	CHEMICAL RECIRCULATING TOILETS.
1121	Q'TRON EVENT RECORDERS.
1127	TOILET VENTILATOR.
1131	REFRIGERATORS.
1132	CABOOSELESS EQUIPMENT.
1154	REMOVAL OF SDA SPEEDOMETERS.
1171	APPLICATION OF .33MFD. CAPACITORS TO LEADERS
1172	REMOVE HALON FIRE EXTINGUISHER SYSTEM.
1177	APPLICATION OF REFRIGERATOR INVERTER.
1180	APPLICATION LOAD RESISTOR TO SONALERT CIRCUIT
1195	REMOVE EMERGENCY SANDING FUNCTION.
1209	INSTALL MOTOROLA SPECTRA RADIO
1217	Q-TRON SPEEDOMETER UPGRADE
1220	TRAINLINE OF MANUAL SAND
1228	APPLY AUXILIARY RADIO HANDSET
1237	REMOVE CLASS LTS./APPLY DITCHLIGHT INDICATORS
1241	APPLY RESISTOR ON RESET PUSH BUTTON
1250	APPLY MODEL 6000 EVENT RECORDER
1263	APPLY GURU DUMP VALVES
1272	REPLACE TOILET COMPARTMENT FAN

MOD NUMBER	DESCRIPTION

APPLICABLE MODS (ELECTRICAL)

62-D-308 REV A SHT. 700 OF 700

ROOM 507