VOLUME ONE

MASTER PARTS CATALOG NO. 90

FREIGHT, PASSENGER AND SWITCHING LOCOMOTIVES

POWERED BY 6, 8, 12, 16-567-567A-567B-567C ENGINES

GENERAL MOTORS LOCOMOTIVES

ELECTRO-MOTIVE DIVISION
GENERAL MOTORS CORPORATION
LA GRANGE, ILLINOIS, U. S. A.

DATE ISSUED: MARCH, 1950 (REVISED FEBRUARY 1965)

LITHO IN U.S.A.

INDEX CAT. 90

	P. L. GROUP	SUBJECT
VOLUME ONE		TABLE OF CONTENTS—VOL. ONE
	300 400	ENGINE
		NUMERICAL INDEX—ENGINE
	500	COOLING SYSTEM
	700	FUEL OIL SYSTEM
	900	LUBE OIL SYSTEM
VOLUME TWO		TABLE OF CONTENTS—VOL. TWO
	1000	EQUIPMENT RACK
	1050	AIR SYSTEM
	1075	AIR REGULATOR
	1100	AIR COMPRESSOR
	1200	COOLING FAN, BELT DRIVE, FLEXIBLE COUPLING, MECHANICAL DRIVE
	1300	ENGINE EXHAUST SYSTEM
	1500	TRUCK, HAND BRAKE
	1800	GENERAL LISTS— CARBODY AND MECHANICAL
	1900	SANDING SYSTEM
	2100	WINDSHIELD WIPER
	2128	SPEED RECORDER
	2150	SANITARY FACILITIES
	2300	STEAM SYSTEM
	2400	CAB
VOLUME THREE		TABLE OF CONTENTS—VOL. THREE
	2500	CARBODY
	2700	COUPLER, DRAFT GEAR
	2900	HORN, BELL
	3100	DYNAMIC BRAKE HATCH
	3200	ELECTRICAL CONTROL CABINET, CONTROL PANEL
	3300	MAIN GENERATOR MAIN GENERATOR-ALTERNATOR
	3500	HEADLIGHT DYNAMOTOR
	3600	AUXILIARY GENERATOR MOUNTING AND BLOWER
	3700	AUXILIARY GENERATOR
	3800	TRACTION MOTOR MOUNTING AND EQUIPMENT
	3900	TRACTION MOTOR
	4100	MOTOR DRIVEN—FUEL PUMP, HEATER, COOLING FAN
	4300	CONTROLLER
	4500	REGULATORS—LOAD, VOLTAGE
VOLUME FOUR		TABLE OF CONTENTS—VOL. FOUR
	4700	MAGNET VALVE
	4900	MANUAL SWITCH
	5100	PNEUMATIC CONTACTOR
	5300 5400	MAGNETIC CONTACTOR AND RELAY
	5500	PRESSURE AND TEMPERATURE CONTROL SWITCHES
	5700	JUMPER, PLUG, RECEPTACLE
	5900	HEADLIGHT
	6300	ALARM
	6900	GRID RESISTOR
	9100	GENERAL LISTS—ELECTRICAL
		NUMERICAL INDEX

FOREWORD

This master Replacement Parts Catalog covers parts ordering information for General Motors Locomotives powered by series 567 Diesel engines. It introduces consolidated parts lists reflecting parts common to various locomotive components.

Engine listings include all series 567 Diesel engines in an across-the-line reference, indicating parts common to 6, 8, 12 and 16-cylinder engines. In addition, the engine parts list had been subdivided for more specific identification and indexing.

The method of listing items in this catalog is termed, "the indented system". Indented items are components of the assembly or subassembly under which they are directly listed. This does not indicate that these items make up the full complement of parts of the assembled unit. Items not recommended for replacement are not listed. The number of components used in the assembly or subassembly is indicated in the column designated "No. Req." (number required). A dash (-) in the column indicates the indented item is not a component of that assembly.

Throughout the catalog, cross-reference between the parts listing and illustration is shown by use of reference numbers. In instances where it is difficult to illustrate all the detailed parts of a group of parts or a subassembly, the reference numbers of the parts are bracketed to indicate their location. Reference numbers not shown on an illustration are identified by an asterisk (*) preceding the reference number in the listing. The plus (+) symbol preceding the reference number indicates the listing is a repetition of that part from its prime location.

The method of listing parts is by single-word part name wherever possible, followed by a detailed identity as to description or application. For example, "Rocker arm shaft" is listed as "Shaft .. Rocker arm".

The X, in the Number Required column designates:

1 - Model Application, or
2 - Subassembly application.

Additional information, in note form and sub-headings, is given within the parts list text to explain usage, application, and items such as newly developed replacement parts and available oversize and undersize parts.

The loose-leaf form of catalog has been adopted as the most convenient means of adding revisions and additions, to keep the catalog current at all times.

WARRANTY

There are no warranties, expressed or implied, made by the Manufacturer on new Electro-Motive parts and accessories except the Manufacturer's Warranty against defects in material and workmanship set out below:

NEW PARTS AND ACCESSORIES WARRANTY

Electro-Motive Division of General Motors Corporation, as Manufacturer, warrants each new Electro-Motive part or accessory sold by it separately, and not as a component part of a locomotive or power unit, to be free from defects in material and workmanship under normal use and service; Electro-Motive's obligation under this warranty being limited to repairing or replacing at its option any such part or accessory which shall, (1) within one year after being placed in service by the original purchaser or before being operated one hundred thousand (100,000) miles, whichever event shall first occur, if installed as a replacement item in a locomotive, or (2) within one year after being placed in service by the original purchaser if installed in a power unit used in an industrial, utility or marine application, be returned to Manufacturer at its factory, transportation charges prepaid, and which examination shall disclose to Manufacturer's satisfaction to have been thus defective.

This warranty shall not apply to any part or accessory which is used for a purpose for which it was not designed or which shall have been repaired or altered in any way so as in the judgment of Electro-Motive to affect adversely its performance and reliability, nor which has been subject to misuse, negligence or accident.

This warranty is expressly in lieu of any other warranties, expressed or implied, including any implied warranty of merchantability or fitness for a particular purpose, and of any other obligations or liability on the part of the Manufacturer, and Electro-Motive Division neither assumes nor authorizes any other person to assume for it any other liability in connection with such part or accessory.

Electro-Motive Division
General Motors Corporation
La Grange, Illinois, U. S. A.

TABLE OF CONTENTS

VOLUME ONE

Parts List	Subject	No. Pages	Application
500 GROUP	**COOLING SYSTEM**		
B501	Cooling System	8	F2, F3, F7, FP7
C502	Cooling System	7	E3, E4, E5, E6, E7
B503	Cooling System	5	SW1
B504	Cooling System	12	NW2, SW7, TR2, TR3, TR4
C505	Cooling System	3	E8
B507	Cooling System	8	SW8, SW9, SW600, SW900, SW1200, TR5, TR6
A508	Cooling System	4	GP7
B509	Cooling System	3	GP7, GP9
C510	Cooling System	6	SD7, SD9
C520	Automatic Shutter and By-pass Valve Control Air Cylinder	3	All Locomotives With 567 Engines
B521	Automatic Shutter and Manual Operating Mechanism	12	E3, E4, E5, E6, E7
B522	Automatic Shutters	4	SD7, SD9
A523	Automatic Shutter and Operating Mechanism	3	E8, E9
A524	Automatic Shutter and Operating Mechanism	4	GP7, GP9
B525	Water By-Pass Valve	3	NW2, SW and TR Locomotives
B529	Manual Shutter Operating Mechanism	2	SW1, NW2
D530	Automatic Shutter and Operating Mechanism	7	SW1, NW2, SW7, SW8, SW9, SW600, SW900, SW1200
A531	Automatic Shutter and Operating Mechanism	8	F2, F3, F7, F9, FP7, FP9
H532	Engine Water Cooling Radiator Assemblies	14	All Locomotives With 567 Engines
F533	Water Tank Level Gauge	2	All Locomotives With 567 Engines
A534	Cooling System Gaskets	1	F2, F3, F7, FP7
C540	Water Temperature Gauge	2	SW1, SW7, SW8, SW9, SW600, SW900, SW1200, NW2, NW3, NW5, GP7, GP9, BL, TR2, TR3, TR4, TR5, TR6
700 GROUP	**FUEL OIL SYSTEM**		
C703	Fuel Oil System	7	F2, F3, F7, F9, FP7, FP9
C704	Fuel Oil System	6	E3, E4, E5, E6, E7
B707	Fuel Oil System	5	E8
A708	Fuel Oil System	3	SW8, SW9, SW600, SW900, SW1200
B709	Fuel Oil System	4	GP7
B710	Fuel Oil System	5	SD7, SD9
B711	Fuel Oil System	5	FT
A717	Fuel Oil System	2	GP9
C724	Fuel Oil Pressure Gauge	1	SW1, SW7, SW8, SW9, NW2, NW5, E7, TR2 TR3, TR4, TR5, TR6, BL
C725	Air Operated Fuel Level Gauge	1	F7, F9, E8, E9, GP7, GP9
E726	Fuel Oil Tank Filler	5	All Locomotives
G728	Fuel Tank Oil Level Gauge	8	SW1, SW7, SW8, SW9, SW600, SW900, SW1200, NW2, FT, F2, F3, F7, F9, FP7, FP9, FL9, GP7, GP9, E3, E4, E5, E6, E7, E8, E9, SD7, SD9, TR5, TR6,
E729	Fuel Oil Cut-Off Valve	1	SW1, SW7, SW8, SW9, SW600, SW900, SW1200, NW2, TR, E7, E8, E9, TR, F2, F3, F7, F9, FP7, FP9, GP7, GP9, SD7, SD9
E730	Fuel Oil Filter	2	F2, F3, F7, F9, FP7, FP9
E732	Fulflo Fuel Oil Filter	2	SW1, NW2, SW7, TR, E7, FT, F2, F3, F7, F9, FP7, FP9

TABLE OF CONTENTS

Parts List	Subject	No. Pages	Application
	FUEL OIL SYSTEM (Continued)		
C734	Combination Fuel Oil Sight Glass and Relief Valve	3	E6, E7, FT
B735	Relief Valve	1	SW1, NW2, TR, TR3, TR4, F2, F3, F7, FP7, GP7, GP9, E8, E9, BL, SD9
C738	Fuel Oil Filter	1	SW1, NW2, TR2, TR3, TR4, E7
B739	Duplex Dual Oil Filter	2	SW1, NW2, E3, E4, E5, E6
D740	Flame Arrestor - Fuel Oil Lines	1	All Locomotives
D741	Dual Fuel Filter	1	SW8, SW9, SW600, SW900, SW1200, E8, E9, GP7, GP9, BL, SD7, SD9, TR9, TR12
B743	Reducing Relief Valve and Filter	1	All Locomotives
D748	Fuel Strainer	2	GP9, GP18, GP20, SD24, SW900, SW1200
C749	Fuel Oil Filter	2	GP18, GP20
A780	Heat Exchanger	3	GP7, GP9, GP18, SD18, SD24
900 GROUP	**LUBE OIL SYSTEM**		
C900	Lube Oil Piping	2	F2, F3, F7, FP7, F9, FP9
C905	Lube Oil System	7	E7
B910	Lube Oil System	3	GP7, GP9
A911	Lube Oil System	4	E8
A913	Lube Oil System	4	SW8, SW9
C915	Lube Oil System	3	SD7, SD9
A924	Lube Oil Piping and Filter	4	SW1, NW2
C925	Lube Oil Tank and Filter	6	SW1, SW7, E3, E5, E6, E7, NW2, FT, TR2, TR3, TR4
G926	Lube Oil Filter	8	F2, F3, F7, F9, FP7, FP9, SW8, SW9, SW600, SW900, SW1200, E8, E9, SW1, NW2, GP7, GP9, SD7, SD9
L927	Lube Oil Cooler	10	All Locomotives
D928	Lube Oil Filter Element	3	All Locomotives
A933	Lube Oil System Gaskets	1	F2, F3, F7, FP7
E935	Lube Oil Gauge	3	All Locomotives
A937	Lube Oil Vent	1	All Locomotives
B939	Lube Oil Filter	7	F3, F7, F9, GP9, GP18, GP20, SD24
A995	Soak Back Pump Lube Oil System	2	SD24

COOLING SYSTEM PIPING ARRANGEMENT

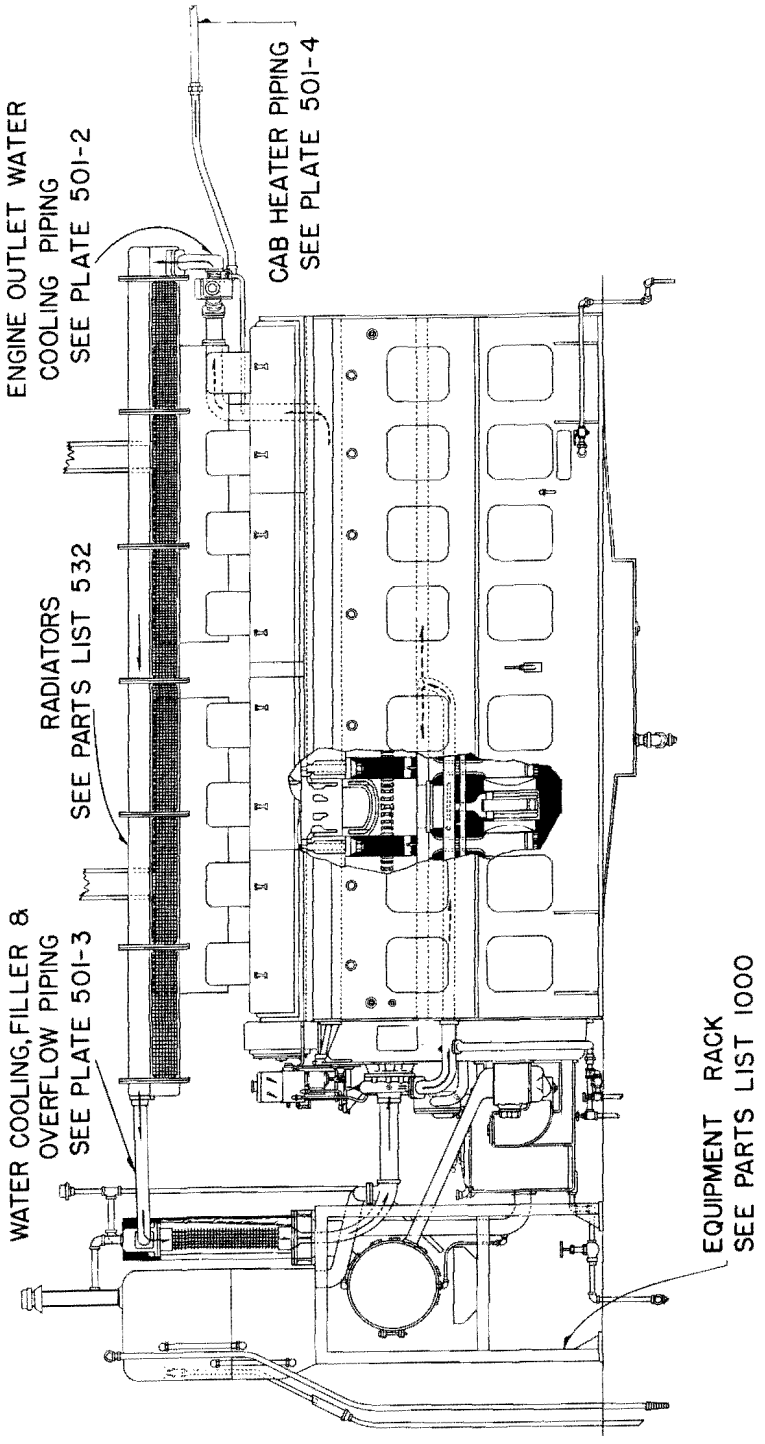

PLATE B501-1

P.L. No. B501

ENGINE OUTLET WATER COOLING PIPING
PLATE B501-2

Ref. No.	Part Number	No. Req.	Description
1	8146492	1	"Y" FITTING .. Engine rear exhaust manifold outlet (For use with flanged elbow to exhaust manifold)
2	8089255	1	"Y" FITTING .. Engine rear exhaust manifold outlet (For direct connection to exhaust manifold)
3	8146488	1	ELBOW .. Flanged
4	8146490	1	GASKET .. Flanged elbow to "Y" fitting and exhaust manifold
5	8038897	1	GASKET .. Rear exhaust manifold outlet to "Y" fitting
6	103323	20	WASHER .. Lock
7	173827	4	SCREW .. Cap
8	173825	4	SCREW .. Cap
9	189069	1	BUSHING .. Reducing
10	8109537	4	FLANGE .. Hose
11	8109536	2	HOSE .. Rubber (2-3/4 I.D. x 7 Inches long)
12	6531905	4	CLAMP .. Rubber hose
13	8055261	4	GASKET .. Rubber hose flange
14	173829	16	BOLT .. Hexagon head
15	173685	16	NUT .. Hexagon
16	8081186	1	ELBOW .. Radiator inlet (Engine left bank; locomotive right side)
17	8081208	1	ELBOW .. Radiator inlet (Engine right bank; locomotive left side)
18	8088987	1	FLANGE .. Blind - Inlet elbow
19	8088988	1	GASKET .. Blind flange - Inlet elbow
20	8014438	8	STUD .. Inlet elbow (3/8-16 x 1-5/8)
21	103321	8	WASHER .. Lock
22	174847	8	NUT .. Hexagon
23	8097916	1	SWITCH .. Thermostat - Shutter control (See Parts List 5501)
24	8098703	1	GASKET .. Thermostat switch to inlet elbow
25	8099702	1	SWITCH .. Temperature - See Parts List 5511
26	8081192	2	GASKET .. Inlet elbow to radiator header
27	8080858	1	FLANGE .. Blind - Crankcase front water outlet
28	8070513	1	GASKET .. Flange - Crankcase front water outlet
29	103325	4	WASHER .. Lock
30	190871	4	NUT .. Hexagon (Bronze)(Replaces 173687 Nut)
31	- - - -	2	MANIFOLD .. Exhaust - See Parts List 1303
32	8147680	1	BRACKET .. "Y" Fitting
33	8147679	1	BOLT .. Hexagon head (1/2-13 x 3)
34	117064	1	NUT .. Hexagon

8089254

P.L. No. B501

ENGINE OUTLET WATER COOLING PIPING

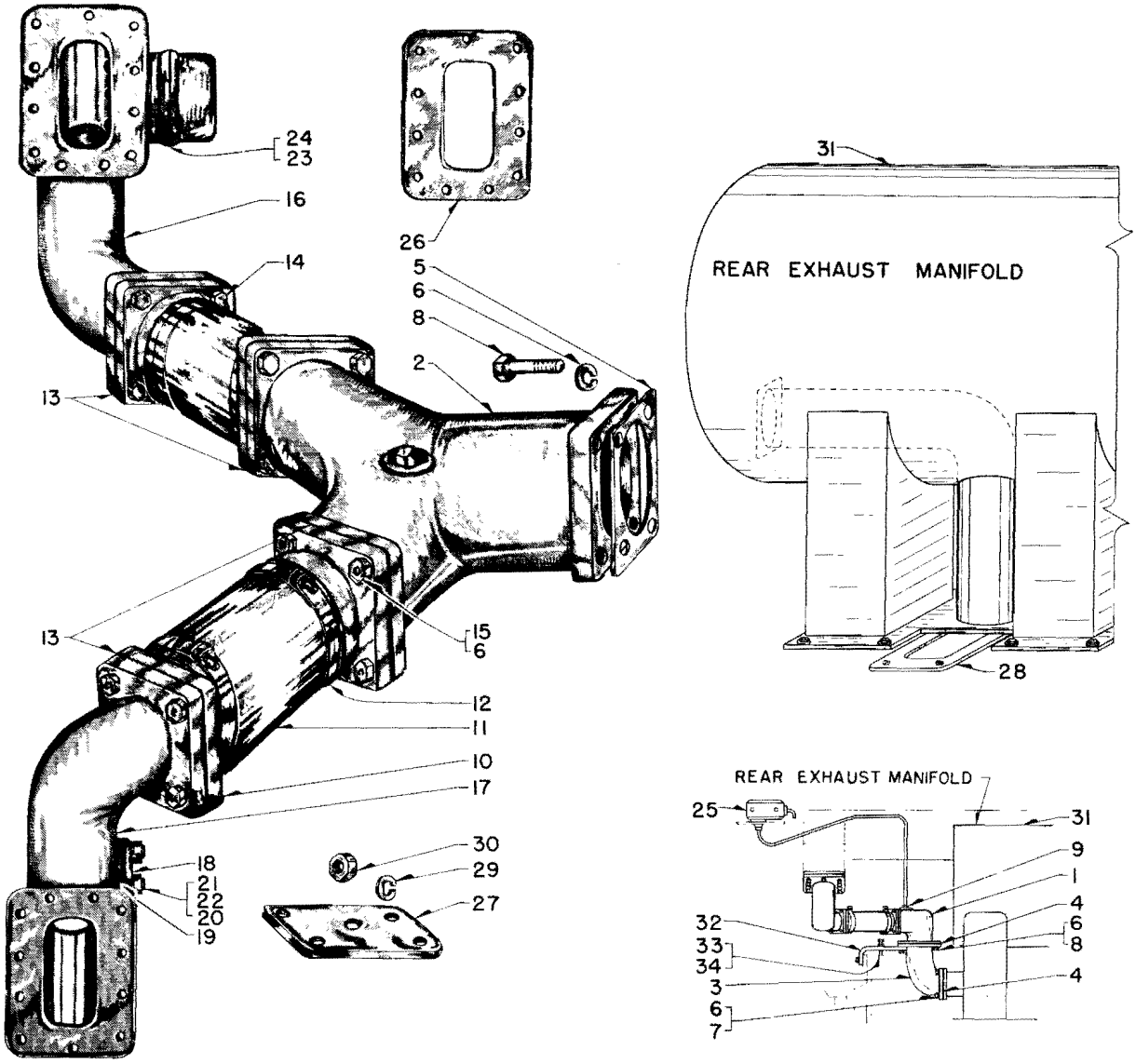

PLATE B501-2

P.L. No. B501

WATER COOLING, FILLER AND OVERFLOW PIPING
(Accessory End)

PLATE B501-3

Ref. No.	Part Number	No. Req.	Description
	- - - -	2	RADIATOR .. Assembly - See Parts List 532
1	8058494	2	HOSE .. Flexible (3 Inch) Accessory rack outlet pipe to water pump
2	8038897	4	GASKET .. Flange - Water pump inlet flexible hose
3	173826	8	SCREW .. Cap
4	103323	44	WASHER .. Lock
5	173825	8	SCREW .. Cap
6	8127030	2	GAUGE .. Pressure (0-60#) (Replaces 8081245 Gauge)
7	8107329	1	PIPE .. Water drain (Includes tee and two flanges)
8	8044512	A.R.	TUBING .. Copper (1-1/4 I.P.S. - 4 Inches required)
9	8061521	1	UNION .. Female pipe (1-1/4 Solder - Bronze)
10	8091558	1	TEE .. Reducing pipe (1-1/4 x 1-1/4 x 1/2 Solder - Bronze)
11	8027845	A.R.	TUBING .. Copper (1/2 I.P.S. - 1 Foot required)
12	8045929	2	ELBOW .. Union pipe (1/2-90° Solder - Bronze)
13	8064590	1	VALVE .. Horizontal check (1/2 Solder)
14	8020940	1	VENTURI .. (Brass)
15	8061237	1	VALVE .. Globe (1/2 Solder)
16	8130249	1	NIPPLE .. Pipe (1-1/4 I.P.S. x 5 Inches long thr'd. one end - Brass)
17	8099907	1	GAUGE .. Temperature - 1/2 P.T. (65° F - 255° F)
18	8064234	1	VALVE .. Angle (1-1/4 P.T.)
19	8126674	1	NIPPLE .. Pipe (1/2 I.P.S. x 4 Inches long - Brass)
20	8024321	2	GASKET .. Header flange
21	8118709	2	FLANGE .. Header (Replaces threaded 8024320 Flange)
22	8118711	2	PIPE .. Discharge (2-1/2 I.P.S.) (Replaces thr'd. end pipe formerly used on the 8107327-8 Pipe Assembly)
23	173685	28	NUT .. Hexagon
24	8081660	2	CLAMP .. Pipe
25	8110130	2	HANGER .. Pipe
26	106332	2	BOLT .. Hexagon head
27	103321	10	WASHER .. Lock
28	174847	2	NUT .. Heavy hexagon
29	8118710	2	FLANGE .. Discharge pipe (2-1/2 Inch) (Replaces thr'd. 8058783 Flange)
30	8055261	4	GASKET .. Flange
31	8055260	2	HOSE .. Flexible metal (2-1/2 Inch)
32	8058783	2	FLANGE .. Oil cooler nipple (2-1/2 P.T.)
33	173837	16	BOLT .. Hexagon head
34	219859	2	NIPPLE .. Pipe
35	8029469	2	GASKET .. Water drain pipe
36	106330	8	SCREW .. Cap
37	189608	2	BUSHING .. Reducing (1-1/2 P.T. x 3/4 P.T.)
38	8088890	2	NIPPLE .. Pipe (3/4 P.T. x 2 Inches long th'd. on one end - Brass)
39	8045930	2	ELBOW .. Union pipe (3/4-90° Solder - Bronze)
40	8050665	A.R.	TUBING .. Copper (3/4 I.P.S. - 28 Feet required)
41	8062419	2	COUPLING .. Pipe (3/4 Solder x 3/4 P.T.)
42	8035705	2	HOSE .. Rubber (1 I.D. x 6 Inches long)
43	8048696	4	CLAMP .. Hose
44	8062394	2	ELBOW .. Pipe (3/4-90° Solder - Bronze)
45	8057743	A.R.	PIPE .. 3/4 I.P.S. (2 Pieces 16 Inches long required)
46	8094652	2	CONNECTION .. Hose (3/4 P.T. Brass)
47	8135972	1	TANK .. Water (Replaces 8091060 Tank) See Parts Group 1000
*48	- - - -	2	GAUGE .. Water tank water level - See Parts List 533

8089254

P.L. No. B501

WATER COOLING, FILLER AND OVERFLOW PIPING
(Accessory End)

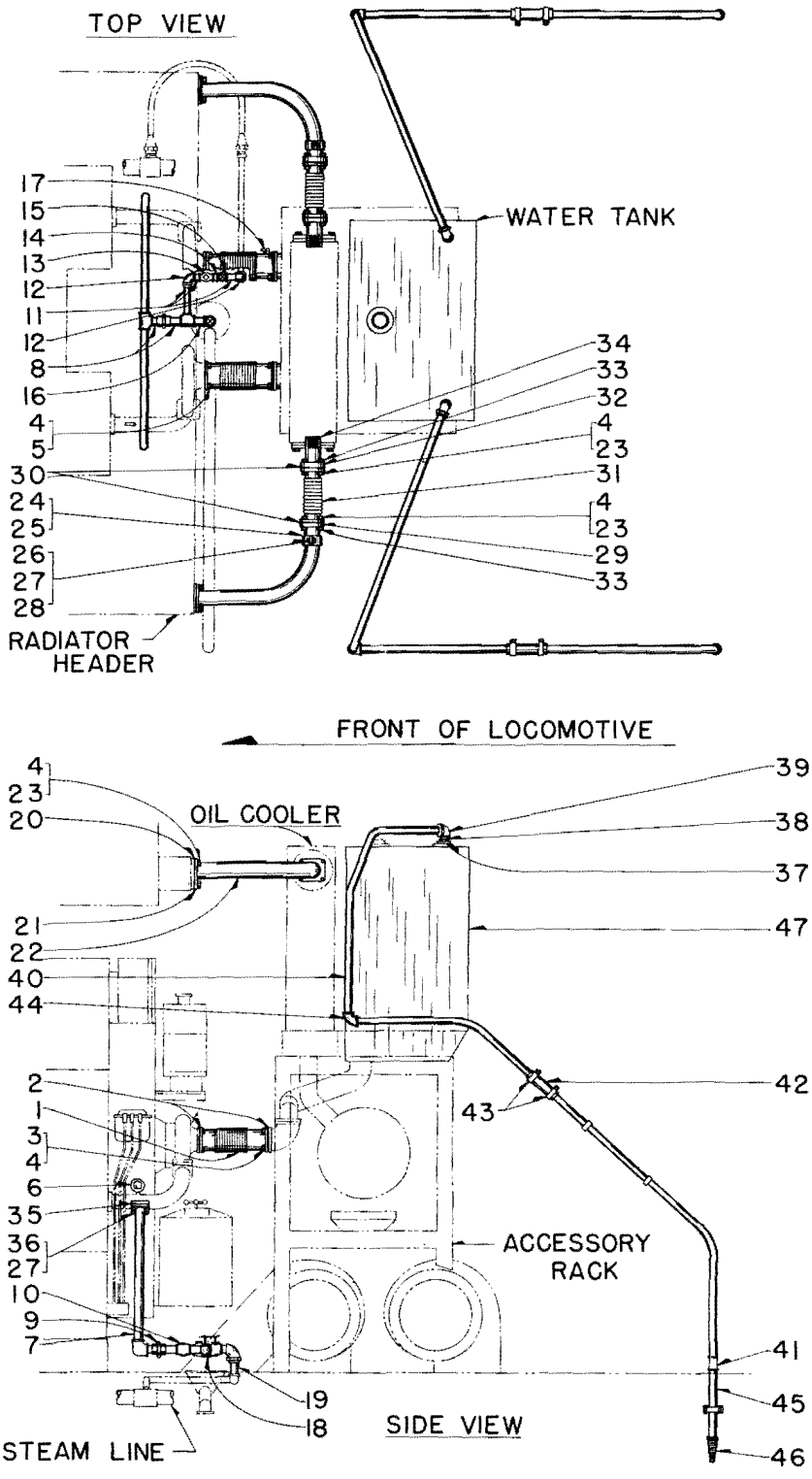

PLATE B501-3

P.L. No. B501

CAB HEATER PIPING
PLATE B501-4

Ref. No.	Part Number	No. Req.	Description
1	- - - -	2	HEATER .. Cab - See Parts List 2400
2	187562	4	BUSHING .. Reducing face
3	8045919	4	UNION .. Pipe (1 I.P.S. Solder x 1 M.P.T. - Bronze) (Replaces 8062489 Union)
4	8077978	A.R.	TUBING .. Copper (1 I.P.S. - 15 Feet required for F3 and F7 locomotives - 16 Feet required for FP7 locomotive)
5	8044512	A.R.	TUBING .. Copper (1-1/4 I.P.S. - 85 Feet required for F3 and F7 locomotives - 93 Feet required for FP7 locomotive)
6	8091539	1	TEE .. Solder reducing (1-1/4 x 1 x 1 - Bronze)
7	8091565	5	COUPLING .. Solder (1-1/4 I.P.S. - Bronze)
8	8062389	2	VALVE .. Globe (1/2 P.T.)
9	8023253	A.R.	TUBING .. Copper (5/8 Tube - 12 Feet 6 Inches required for F3 and F7 locomotives - 16 Feet required for FP7 locomotive)
10	109429	3	ELBOW .. Flared tube
11	116488	6	NUT .. Flared tube
12	8073299	3	NIPPLE .. Close pipe (1/2 P.T. x 1-1/8 extra heavy brass)
*13	144130	2	ELBOW .. Pipe (Brass) (Located between radiator and globe valve)
*14	8061468	2	NIPPLE .. Short pipe (1/2 P.T. x 1-1/2 extra heavy brass)
*15	188453	2	BUSHING .. Reducing face - Radiator
16	8062395	1	ELBOW .. Solder (1 I.P.S. - 90° Bronze)
17	144288	1	TEE .. Flared tube
18	8062650	1	TEE .. Solder reducing (1 x 1 x 1-1/4 Bronze)
19	8045932	2	ELBOW .. Solder union (1-1/4 - 90° Bronze)
20	8092285	1	VALVE .. Solder globe (1-1/4 Inch)
21	8061521	1	UNION .. Female solder (1-1/4 I.P.S. Bronze)
22	8088781	1	TEE .. Reducing (1-1/4 Solder x 1-1/4 Solder x 1/2 P.T. Bronze)
23	8131020	1	HOSE ASSEMBLY .. Rubber (Includes elbow and connector)
24	8146852	1	TUBE ASSEMBLY .. Drain line (Includes two 1/2 Inch tube nuts)
25	8027428	1	CONNECTOR .. Flared tube
26	8103625	1	FLANGE .. Hot water line to radiator inlet elbow (Brass)
*27	8049261	1	TEE .. Reducing pipe (1/2 P.T. x 1/2 P.T. x 1 P.T. Bronze)
28	8041831	1	VALVE .. Angle (1/2 P.T.)
29	8083498	1	NIPPLE .. Close pipe (1 P.T. x 1-1/2 extra heavy brass)
30	8069281	1	VALVE .. Horizontal check (1 P.T.)
31	8005021	1	VALVE .. Pressure regulating (1 P.T. - Diaphragm set at 10#)
32	8069285	1	VALVE .. Globe (1 P.T.)
33	8061461	1	NIPPLE .. Close pipe (1 P.T. x 1-1/2 Inches - Threaded one end only - Brass)
34	113176	2	PLUG .. Pipe (Brass)
35	8095267	2	TEE .. Solder reducing (1 Solder x 1/2 P.T. x 1 Solder Bronze)
*36	8125327	1	NIPPLE .. Pipe (1 P.T. x 7 extra heavy brass - Threaded one end only)
37	8141875	1	STRAINER .. Train steam line to cab heating line (1 P.T.)
*38	8157284	1	SCREEN .. Strainer (Brass)
*39	8157350	1	CAP .. Strainer
*40	8157285	1	GASKET .. Strainer cap
*41	8090084	1	NIPPLE .. Pipe (1 P.T. x 4 extra heavy brass - Threaded one end only)
42	8045931	1	ELBOW .. Solder union (1-90° Bronze)
43	8044154	1	UNION .. Female pipe (1/2 P.T.)
44	8077989	A.R.	PIPE .. (1/2 Inch - 3 Feet required)
45	119098	4	ELBOW .. Pipe
*46	8058514	A.R.	INSULATION .. Thermal (3/16 x 1-9/16 - 900 Feet required for F3 and F7 locomotives - 932 Feet required for FP7 locomotive)

8092196 8141041

P.L. No. B501

CAB HEATER PIPING

Ref. No.	Part Number	No. Req.		Description
		X	-	F3 Locomotive
		-	X	F7 and FP7 Locomotive
*47	8109350	14	17	SUPPORT .. Cover angle (2 Inches wide x 4-7/8 Inches long)
48	8091964	1	-	COVER .. Pipe (51-1/8 Inches long)
48	8131160	-	1	COVER .. Pipe (57-5/16 Inches long)
49	8091965	1	-	COVER .. Pipe (6 Feet 3-7/8 Inches long)
49	8131161	-	1	COVER .. Pipe (17-1/8 Inches long)
*50	8134885	4	4	SUPPORT .. Pipe (2-1/2 Inches wide x 4-3/16 Inches long)
51	8129676	-	1	COVER .. Pipe (24-13/16 Inches long)
52	8129674	-	1	COVER .. Pipe (34-9/16 Inches long)
*53	8131159	-	1	PLATE .. Cover (2-3/16 Inches wide x 2-5/8 Inches long)
54	8091966	1	-	COVER .. Pipe (23-3/4 Inches long)
54	8129639	-	1	COVER .. Pipe (27 Inches long)
55	8091967	A.R.	-	COVER .. Pipe (6 Feet 8-3/16 Inches long - Not used with a side number box)
55	8112049	1	-	COVER .. Pipe (6 Feet 8-3/16 Inches long - Used with a side number box)
55	8129526	-	1	COVER .. Pipe (36-1/4 Inches long)
56	8131643	-	1	COVER .. Pipe (40-3/4 Inches long)
57	8129524	-	1	COVER .. Pipe (22 Inches long)
58	8091968	A.R.	-	COVER .. Pipe (58-9/16 Inches long - Not used with a side number box)
58	8112048	1	-	COVER .. Pipe (58-9/16 Inches long - Used with a side number box)
58	8129523	-	1	COVER .. Pipe (35-3/32 Inches long)
59	8091969	1	-	COVER .. Pipe (29-1/4 Inches long)
59	8129525	-	1	COVER .. Pipe (34-5/16 Inches long)
60	8135382	A.R.	A.R.	GASKET .. Pressure sensitive (1/16 x 3/4 Inches wide - 30 Feet required for F3 and F7 locomotives, 33 Feet for FP7 locomotive) (Replaces 8075658 Gasket)
61	8091558	1	1	TEE .. Solder reducing (1-1/4 x 1-1/4 x 1/2 Bronze)
62	8091577	1	1	VALVE .. Angle solder (1/2 P.T.)
63	8027845	A.R.	A.R.	TUBING .. Copper (1/2 I.P.S. - 6 Inches required)
64	8095165	1	1	ELBOW .. Solder (1/2-90° Bronze)
65	100135	4	4	SCREW .. Cap - Water tank flange
66	103321	4	4	WASHER .. Lock
67	8061463	1	1	NIPPLE .. Close pipe (1-1/4 P.T. x 1-5/8 extra heavy brass - Threaded one end only)
68	8025322	1	1	FLANGE .. Water tank (1-1/4)
69	8029469	1	1	GASKET .. Water tank flange
*70	171589	56	44	SCREW .. Self-tapping - Pipe cover to support and sill
71	8027438	A.R.	A.R.	PIPE .. Brass (1/2 Inch - 1 Foot required)
*72	8090978	1	1	NIPPLE .. Pipe (1/2 x 4-1/2 extra heavy brass) Globe valve to radiator
*73	8133936	-	1	COVER .. Pipe (24-5/16 Inches long)
*74	8133937	-	1	COVER .. Pipe (24-3/4 Inches long)
*75	8133938	-	1	COVER .. Pipe (17-1/8 Inches long)

P.L. No. B501 Parts List No. B501

CAB HEATER PIPING

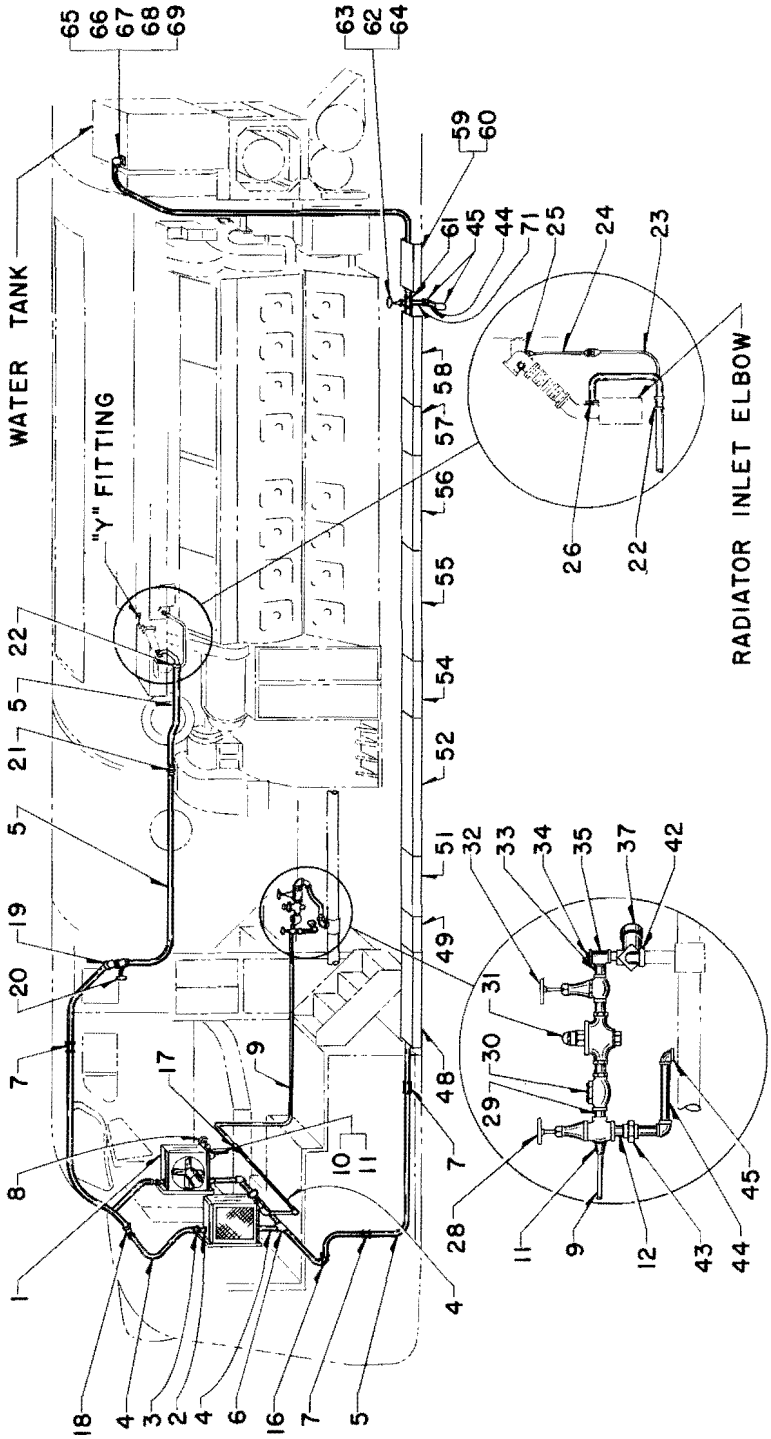

PLATE B501-4

Parts List No. C502

COOLING SYSTEM

E3, E4, E5, E6 AND E7 LOCOMOTIVES

PLATE B502-1 AND 2

Ref. No.	Part Number	No. Req.		Description
		A	-	E3, E4, E5, E6 COOLING SYSTEM
		-	B	E7 COOLING SYSTEM
1	- - - -	4	4	RADIATOR ASSEMBLY .. Cooling - See P. L. 532
2	- - - -	-	-	ENGINE WATER LINES .. See P. L. 425
3	- - - -	4	4	PUMP .. Engine water - See P. L. 420
4	8035971	1	-	TANK .. Cooling water - No. 1 end - 90 gallon - Model E3, E4 and E5 locomotives
5	8060867	1	1	TANK .. Cooling water - No. 1 end - 90 gallon - Model E6 and E7 locomotives
6	8022314	1	1	PLATE .. Handhole cover
7	8022313	1	1	GASKET .. Handhole cover
8	103321	6	6	WASHER .. Lock - 3/8
9	106329	6	6	BOLT .. Handhole cover - 3/8-16 x 5/8 hex. hd.
10	8038860	1	1	TANK .. Cooling water - No. 2 end - 88.7 gallon
*11	8035976	1	-	GAUGE .. Water tank level - Applied to 8035971 water tank only
*12	8035979	2	-	GASKET .. Gauge glass
*13	8035978	1	-	GLASS .. Gauge
*14	8035980	1	-	HOUSING .. Gauge glass
*15	100123	14	-	BOLT .. Gauge to water tank - 5/16-18 x 1-1/4 hex. hd.
*16	103320	14	-	WASHER .. Lock - 5/16
*17	8038895	1	-	PIPE ASSEMBLY .. Overflow - 17-1/2 in. lg.
18	8066286	1	-	GAUGE .. Water tank level - Replaced by 8117496, Ref. No. 25
*19	8037786	1	-	COCK .. Gauge - Top - 1/2 P. T.
*20	8034602	1	-	RING .. Seal
*21	8037296	1	-	COCK .. Gauge - Bottom - 1/2 P. T.
*22	8034602	1	-	RING .. Seal
*23	8118869	1	-	GLASS .. Water gauge - 5/8 dia. x 11-1/2 in. lg.
*24	8107413	2	-	ROD .. Guard
25	8117496	-	1	GAUGE .. Water tank level - See P. L. 533
/*26	8035716	8	-	HOSE .. Rubber - 2-7/8 I. D. x 8 in. lg.
27	8035704	4	4	HOSE .. Rubber - 7/8 I. D. x 8 in. lg.
28	8035706	4	8	HOSE .. Rubber - 1 I. D. x 8 in. lg.
29	8035714	16	8	HOSE .. Rubber - 2-3/8 I. D. x 8 in. lg.
30	8035718	4	4	HOSE .. Rubber - 3-1/2 I. D. x 8 in. lg.
*31	8035708	4	-	HOSE .. Rubber - 1-1/4 I. D. x 8 in. lg.
32	8048696	8	16	CLAMP .. Hose - For 1-1/2 O. D. hose
33	8048700	32	16	CLAMP .. Hose - For 3 O. D. hose
34	8048702	8	8	CLAMP .. Hose - For 4-5/16 O. D. hose
*35	8048701	16	-	CLAMP .. Hose - For 3-7/16 O. D. hose
36	8048695	8	8	CLAMP .. Hose - For 1-11/32 O. D. hose
*37	8048697	8	-	CLAMP .. Hose - For 1-7/8 O. D. hose
*38	8126649	4	-	GASKET .. Water tank flange - 3 in. - Replaces 8038897
*39	8022420	1	-	GASKET .. Overflow pipe to flange
40	8028761	2	4	GASKET .. Water pump intake
*41	8029469	4	4	GASKET .. Water drain
42	8015648	-	4	GASKET .. Water discharge manifold - Replaces 8047991
43	8060915	-	1	GASKET .. Overflow pipe
44	8070513	-	4	GASKET .. Blind flange

/ 8189925 Dacron Hose recommended replacement for 8035716
8191802 Dacron Hose recommended replacement for 8035718

P. L. No. C502

COOLING SYSTEM

Ref. No.	Part Number	No. Req.		Description
		A	-	E3, E4, E5, E6 COOLING SYSTEM (continued)
		-	B	E7 COOLING SYSTEM (continued)
45	8082672	-	16	GASKET .. Flange - 3 in.
*46	- - - -	A.R.	A.R.	GASKET .. Tank mounting - 1/16 x 3/4 in. wide - 25 ft. req. - Avail. 100 ft. - 8133198 - Replaces 8084104
47	8021395	8	8	GASKET .. Radiator flange - 2 in.
48	8022296	8	8	GASKET .. Radiator blind flange - 2-1/2 in.
49	8025322	4	4	FLANGE .. 1-1/4 in.
50	8031583	8	4	FLANGE .. 2-1/2 in.
51	8038896	4	10	FLANGE .. 3 in.
52	8080858	-	2	FLANGE .. Blind
*53	8082654	-	4	FLANGE .. Blind
54	8082655	-	2	FLANGE .. Blind - Water discharge
55	8020816	-	4	FLANGE .. Square - 2 in.
56	8022410	8	8	FLANGE .. Radiator - 2 in.
57	8127030	4	4	GAUGE .. Water pressure - Replaces 8051099 - See P. L. 1076
58	8031666	2	2	GAUGE .. Temperature - 50° - 300°
59	8123654	-	1	PLATE .. Blanking - For hole in hatch sheet
60	8060919	1	1	FUNNEL .. Overflow
61	8064335	2	2	VALVE .. Globe - 1/2 in. solder
62	8064590	2	2	VALVE .. Horizontal check - 1/2 in. solder
63	8068662	-	2	VALVE .. Globe - 1/4 solder x 1/4 P. T.
64	8072416	2	2	VALVE .. Angle - 1-1/4 in. solder union on side - F. P. T. on tail piece
65	8123579	-	1	ADAPTER .. Water discharge
66	8123653	-	1	GUTTER
67	8094652	4	4	CONNECTION .. Water hose - 3/4 P. T.
68	8123655	-	1	CLAMP .. Water discharge pipe
69	8123656	-	1	BASE .. Clamp to camshaft housing cover
70	8082963	-	2	MANIFOLD .. Water discharge
71	8095165	-	4	ELBOW .. Solder - 1/2 - 90° - Replaces 8031226
72	8038894	2	2	ELBOW .. Flanged - Water pump intake
73	8045996	1	1	ELBOW .. Flanged - Water pump intake - L. S.
*74	8045997	1	1	ELBOW .. Flanged - Water pump intake - R. S.
75	8062374	19	4	ELBOW .. Solder - 1/2 - 90°
76	8062394	17	3	ELBOW .. Solder - 3/4 - 90°
77	8062426	-	2	ELBOW .. Solder - 3/4 - 45°
78	8062427	2	4	ELBOW .. Solder - 1-1/4 - 45°
79	8062443	-	4	ELBOW .. Reducing solder - 2-1/2 x 2 in.
80	8062446	8	4	ELBOW .. Street solder - 2 in. male and female - 90°
81	8045929	7	4	ELBOW .. Union solder - 1/2 - 90° - Replaces 8062466
82	8062469	-	2	ELBOW .. Male and female union solder - 3/4 - 90°
*83	8045932	4	2	ELBOW .. Union solder - 1-1/4 - 90° - Replaces 8062471 - Water pump drain line - R. S.
84	8044170	-	1	ELBOW .. Union - 1-1/4 - 90° - Replaces 189005
85	8045917	-	3	UNION .. Pipe - 1/2 P. T.
86	8062488	-	2	UNION .. Solder - 3/4 in. male and female
87	8062289	2	2	TEE .. Solder - 1-1/4 in.
88	8062303	-	4	TEE .. 2 in. solder x 1/2 P. T. x 2 in. solder
*89	8061252	2	2	TEE .. 1/2 in. solder union outlet - Replaces 8062477
90	8062478	-	2	TEE .. Reducing - 1-1/4 solder x 1/2 P.T. x 1-1/2 solder union
91	8088781	-	2	TEE .. Reducing - 1-1/4 solder x 1-1/4 solder x 1/2 P. T.

P. L. No. C502

COOLING SYSTEM

Ref. No.	Part Number	No. Req.		Description
		A	-	E3,E4,E5,E6 COOLING SYSTEM (continued)
		-	B	E7 COOLING SYSTEM (continued)
92	8062418	1	1	COUPLING .. 1/2 in. solder x 1/2 P.T.
93	187397	2	2	COUPLING .. 1/2 in.
94	187410	1	1	COUPLING .. Reducing - 2 in. x 1/2 in.
95	8061463	4	4	NIPPLE .. Close pipe - 1-1/4 P.T. one end threaded
*96	8072577	-	4	NIPPLE .. Pipe - 1/2 x 2 in. lg. - Brass
97	103868	-	2	PLUG .. Pipe - 1/2 P.T.
*98	103869	4	8	PLUG .. Pipe - 3/4 P.T.
99	103870	-	4	PLUG .. Pipe - 1 P.T.
100	106643	-	7	PLUG .. Pipe - 1-1/2 P.T.
*101	143955	-	1	PLUG .. Pipe - 1-1/2 P.T. headless - Located bottom of water tank
102	8038893	2	2	PIPE .. Filler
103	8060868	-	1	PIPE .. Overflow
104	8072576	-	1	PIPE .. 2 x 12 in. lg. - Brass
105	8123582	-	2	PIPE .. Water discharge
106	8123584	-	2	PIPE .. Water discharge
107	116436	-	2	CONNECTOR .. Flared tube - 1/4 tube x 1/4 M.P.T.
108	8018362	64	64	STUD .. 1/2-13 x 2-3/8 in. lg.
109	8074706	-	4	STUD .. 1/2 - 20 x 2-1/8 in. lg.
110	8122246	A	A	TAPE .. Asbestos insulating - 1/16 x 1-1/2 in. wide - 50 ft. req.
		R	R	Avail. 4 lb. roll - 8122246
111	8116511	-	A	TUBING .. Copper - 1/4 O.D. - 2 ft. req. - Avail. 50 ft. - 8116511
			R	
112	8122502	-	A	TUBING .. Copper - 2.375 O.D. - 26 ft. req. - Avail. 20 ft. -
			R	8122502
113	8116858	A	A	TUBING .. Copper - .840 O.D. - 49 ft. req. - Avail. 20 ft. -
		R	R	8116858
114	8044512	A	A	TUBING .. Copper - 1.660 O.D. - 19 ft. req. - Sold per foot -
		R	R	8044512
115	8145679	A	A	TUBING .. Copper - 2.875 O.D. - 12 in. req. - Avail. 20 ft. -
		R	R	8145679
116	8116865	A	A	TUBING .. Copper - 3.500 O.D. - 21 ft. req. - Avail. 12 ft. -
		R	R	8116865
117	8133013	A	A	TUBING .. Copper - 1.050 O.D. - 95 ft. req. - Avail. 20 ft. -
		R	R	8133013
118	8116871	-	A	PIPE .. Brass - 1/2 in. - 8 ft. req. - Avail. 12 ft. - 8116871
			R	
119	8113050	-	A	PIPE .. Brass - 3/4 in. - 9 ft. req. - Avail. 12 ft. - 8113050
			R	
120	8116751	A	A	PIPE .. Steel - 1/2 in. - 2 ft. req. - Avail. 20 ft. - 8116751
		R	R	
121	8116938	A	A	PIPE .. Steel - 1-1/4 in. - 13 ft. req. - Avail. 20 ft. - 8116938
		R	R	
122	179839	20	20	BOLT .. 3/8-16 x 1 hex. hd. - Replaces 100134
123	179845	16	16	BOLT .. 3/8-16 x 1-3/4 hex. hd. - Replaces 100137
124	179881	-	2	BOLT .. 1/2-13 x 1 hex. hd. - Replaces 100158
125	179884	-	16	BOLT .. 1/2-13 x 1-3/8 hex. hd. - Replaces 106342
126	179883	32	36	BOLT .. 1/2-13 x 1-1/4 hex. hd. - Replaces 173825
127	179885	16	40	BOLT .. 1/2-13 x 1-1/2 hex. hd. - Replaces 173827

P. L. No. C502

COOLING SYSTEM

Ref. No.	Part Number	No. Req.		Description
		A	-	E3,E4,E5,E6 COOLING SYSTEM (continued)
		-	B	E7 COOLING SYSTEM (continued)
128	6101229	-	16	WASHER .. Lock - 1/2
129	103321	30	30	WASHER .. Lock - 3/8
130	103323	112	156	WASHER .. Lock - 1/2
131	103325	-	16	WASHER .. Lock - 5/8
132	120396	-	2	WASHER .. Plain - 1/2 - Replaces 103343
133	103028	-	4	NUT .. 1/2-20 hex. - Replaces 117051
134	118537	-	2	NUT .. Flared tube - 1/4 tube
135	102637	64	64	NUT .. 1/2-13 hex. - Replaces 429608 and 173685
136	451967	-	18	NUT .. 5/8-11 hex. - Bronze - Replaces 190871
137	137971	2	4	ELBOW .. 1-1/4 - 90°
*138	8060543	8	-	DEFLECTOR .. Heat
*139	8062247	2	-	VALVE .. Gate - 1-1/4 in. solder
*140	8022294	4	-	CONNECTION .. Thermometer
*141	8022413	4	-	VALVE .. By-pass - 1 P.T.
142	8020940	2	2	VENTURI
143	8020943	2	2	CAP .. Water filler
144	8051674	2	2	FLASHING .. Pipe - 3/4 in.
145	8116901	2	2	FLASHING .. Water filler pipe
*146	8022422	1	-	SUMP .. Drain - Overflow
*147	8022414	4	-	FITTING .. Y-solder - By-pass line - 2 in. x 2 in. x 1 in.
*148	187778	4	-	BUSHING .. Face - 3/4 x 1/2

P. L. No. C502

COOLING SYSTEM

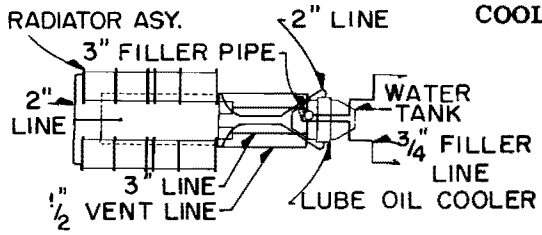

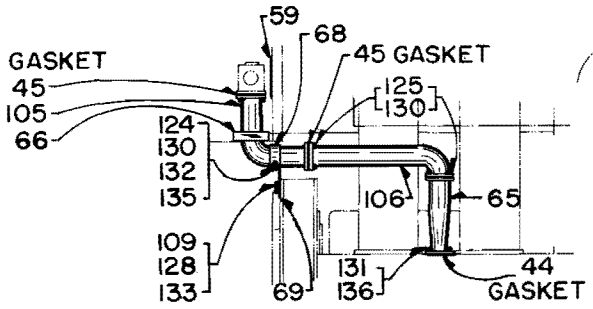

IMPROVED DESIGN

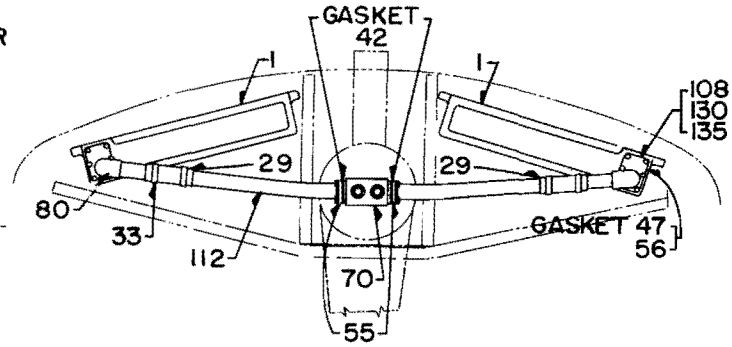

END VIEW

RADIATOR PIPING - GENERATOR END

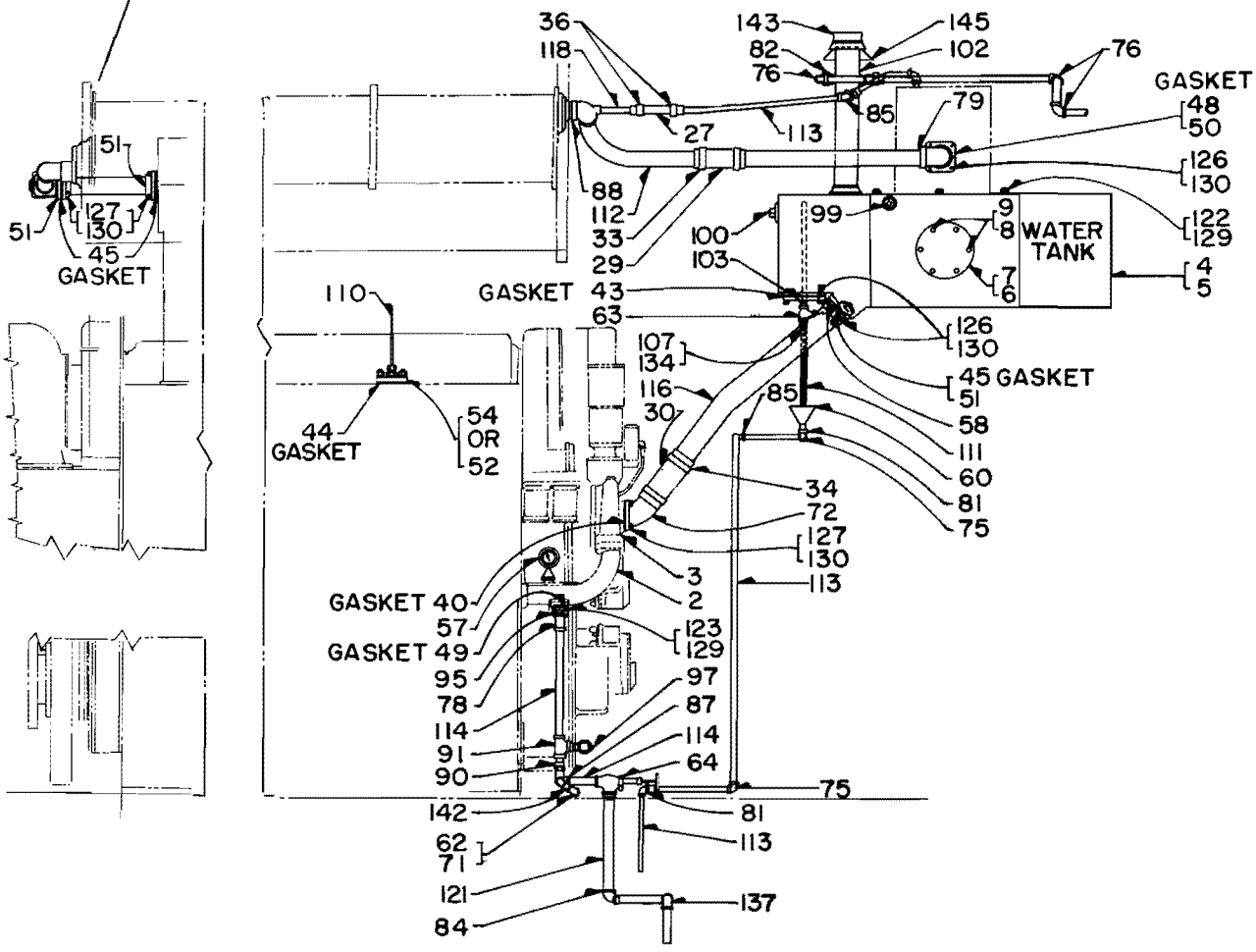

COOLING PIPING - NO. 1 ENGINE

PLATE B502-1

P. L. No. C502

COOLING SYSTEM

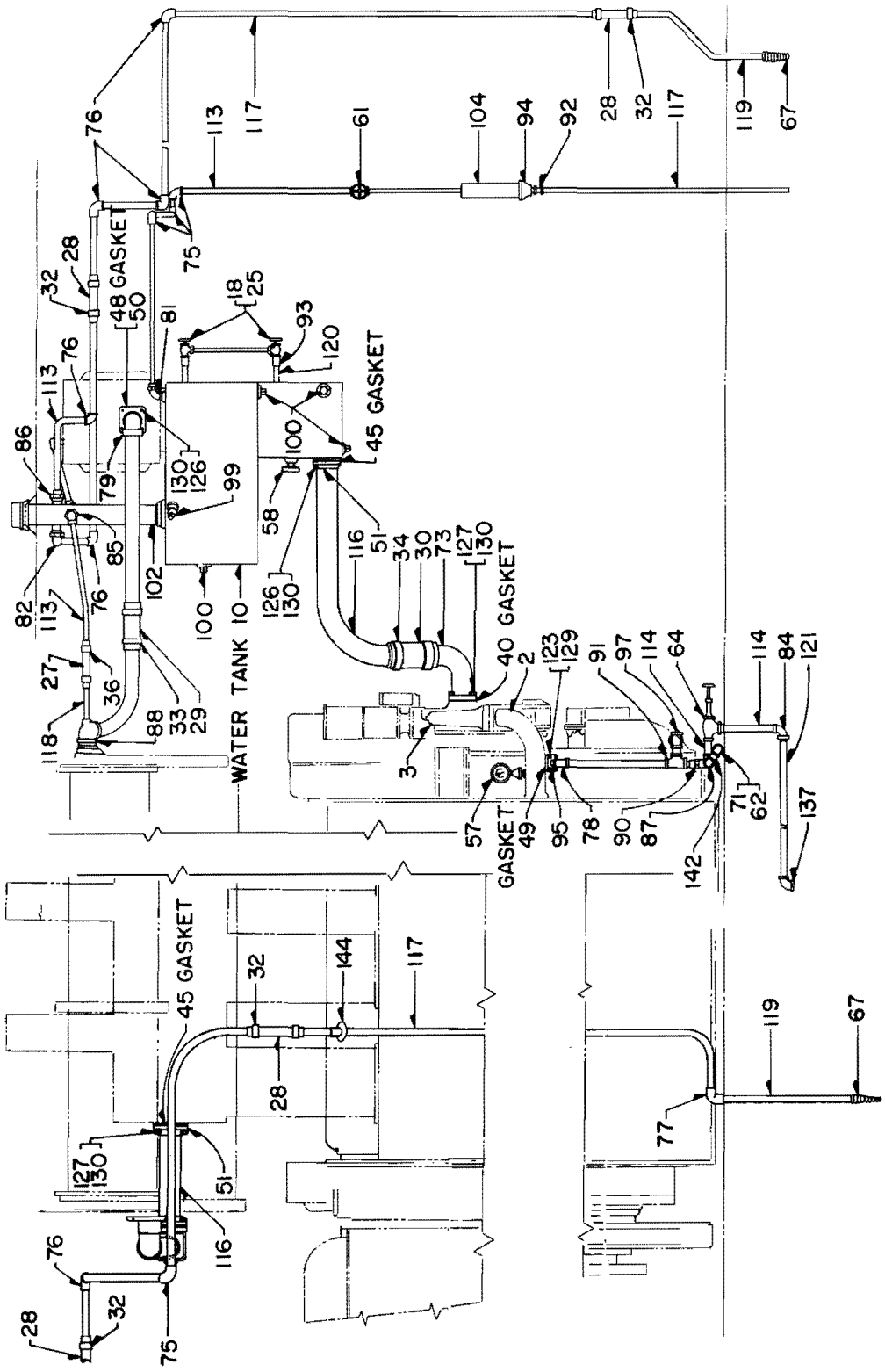

COOLING PIPING - NO. 2 ENGINE

PLATE B502-2

P. L. No. C502

COOLING SYSTEM

EMERGENCY COOLING WATER TRANSFER PIPING FROM STEAM GENERATOR

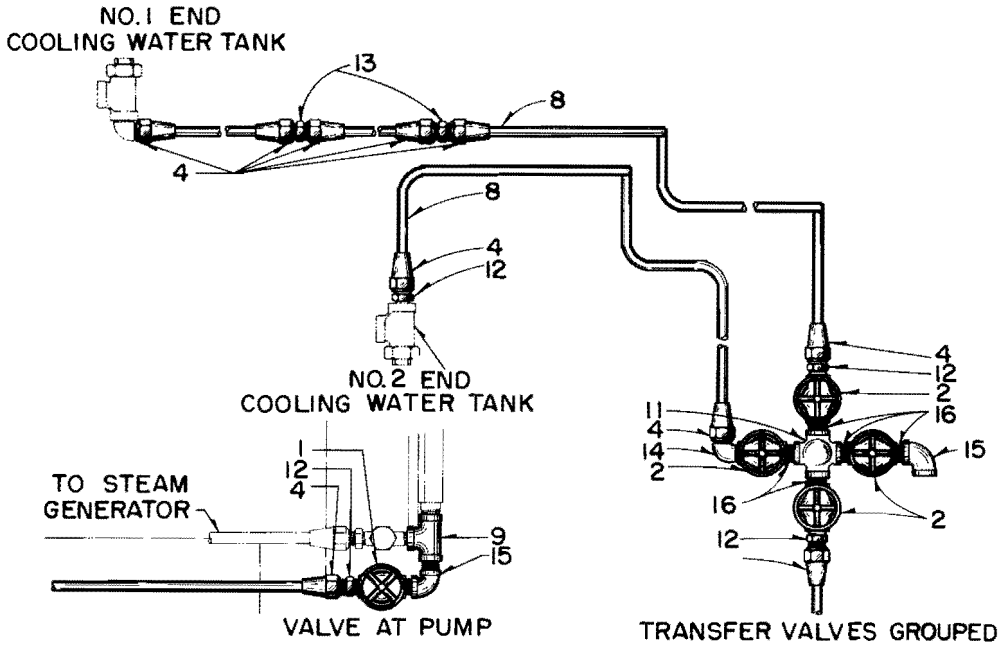

PLATE B502-3

Ref. No.	Part Number	No. Req.		Description
		A	-	PIPING WITH TANK VALVE LOCATED AT STEAM GEN. PUMP
		-	B	PIPING WITH TRANSFER VALVES GROUPED TOGETHER
1	8055291	3	1	VALVE .. Gate - 1/2 P.T.
2	8060858	1	4	VALVE .. Globe - 1/2 P.T.
* 3	8055470	1	-	COCK .. Three-way - 1/2 P.T. - Appl. with two gate valves at No. 2 water tank
4	116488	10	12	NUT .. Flared tube - 5/8
* 5	8088782	1	1	TEE .. 1/2 sol. x 1/2 sol. x 1/2 P.T. - No. 2 end - Steam gen. return line
* 6	8062483	2	-	TEE .. 1/2 P.T. x 1/2 sol. x 1/2 fem. sol. union on run
* 7	138105	1	1	TEE .. Pipe - 1/2 P.T. - Steam gen. water pump connection
8	8116729	A	A	TUBING .. 5/8 O. D. copper - 50 ft. lg.
		R	R	
9	144089	1	-	TEE .. 1/2 P.T.
*10	144293	-	1	TEE .. Flared tube - 5/8 tube x 5/8 tube x 1/2 M.P.T.
11	144158	1	1	CROSS .. Pipe - 1/2 P.T.
12	116487	4	3	CONNECTOR .. 5/8 tube x 5/8 tube x 1/2 F.P.T.
13	119467	2	3	UNION .. Flared tube - 5/8 tube
14	109429	2	2	ELBOW .. Flared tube - 5/8 tube x 1/2 M.P.T.
15	144130	2	1	ELBOW .. Pipe - 1/2 - 90
16	8073299	9	8	NIPPLE .. Close pipe - 1/2 P.T. - Brass
*17	8060963	2	2	NIPPLE .. Close pipe - 1/2 P.T. - Steam gen. water pump connection
*18	103868	4	4	PLUG .. Pipe - 1/2 P.T. - Engine water pump drain line
*19	8090488	-	4	GROMMET .. 5/8 tube
*20	179800	-	1	BOLT .. 1/4-20 x 1-3/8 hex. hd. - Replaces 106322
*21	8108114	-	4	CLAMP .. Pipe
*22	8108210	-	4	CLAMP .. Pipe
*23	8119263	-	2	CLAMP .. Pipe

8118078 8055397 8088755

COOLING SYSTEM

SW1 LOCOMOTIVE

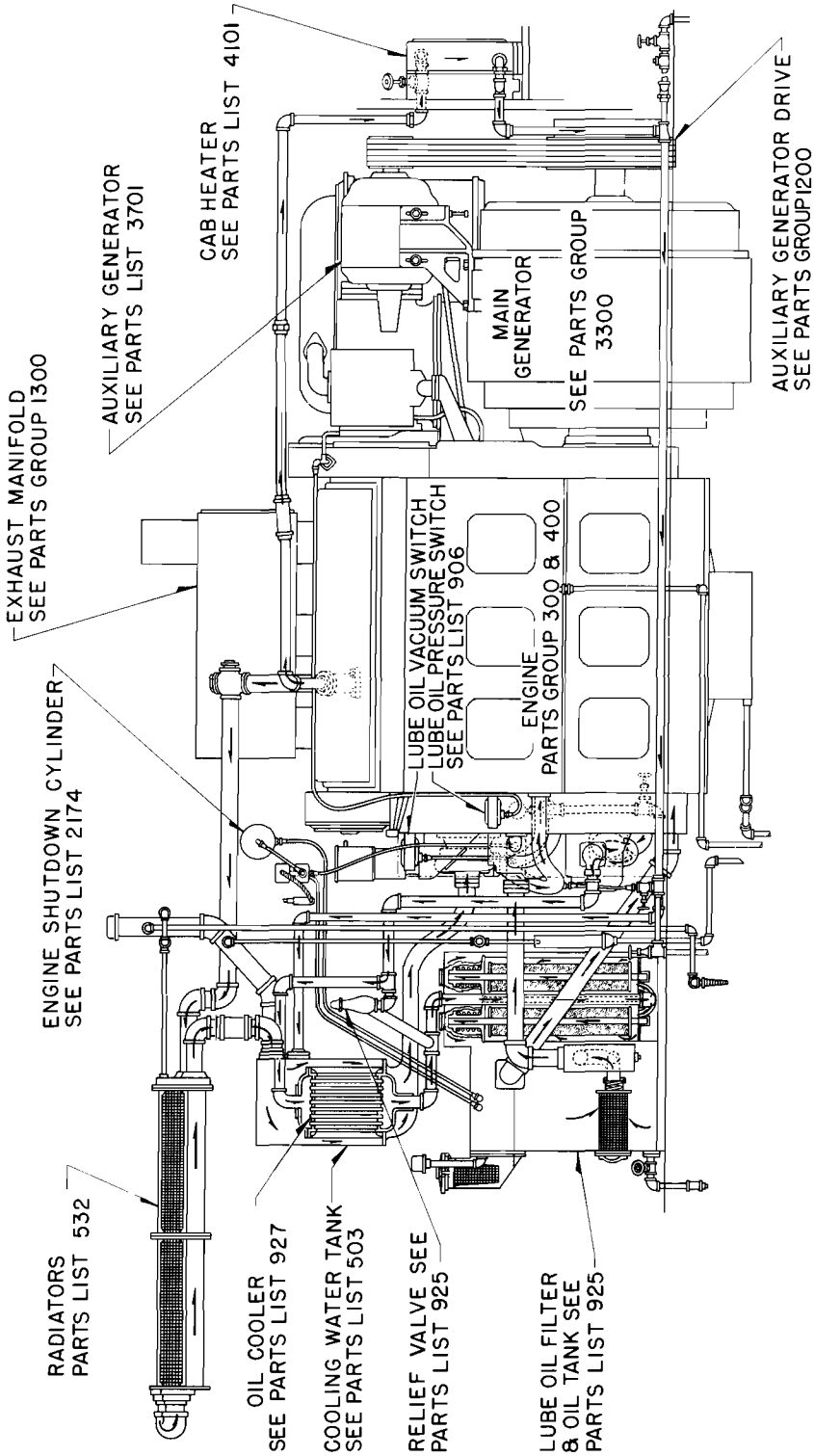

600 H.P. LOCOMOTIVE COOLING PIPING ARRANGEMENT

PLATE B503-1

P. L. No. B503

COOLING SYSTEM

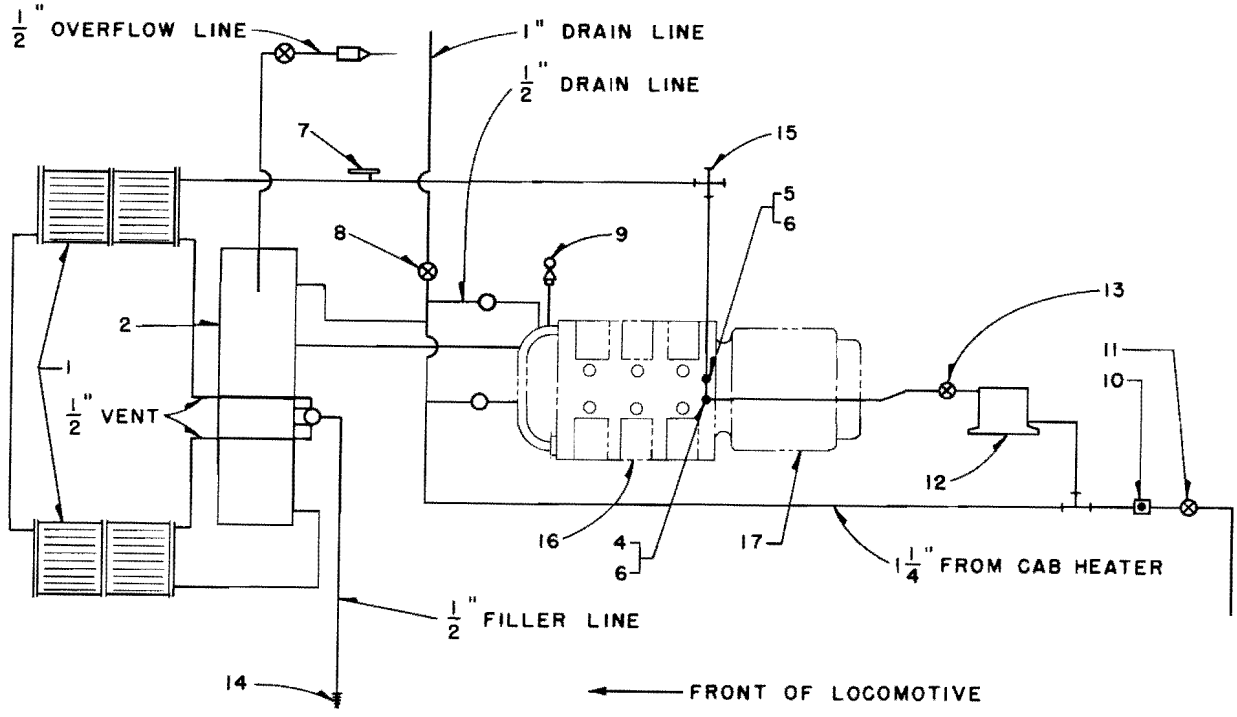

PLATE B503-2

Ref. No.	Part Number	No. Req.		Description
		X	-	PIPING FOR 567 ENGINE WITH CAST TOP DECK CRANKCASE
		-	X	PIPING FOR 567 ENGINE WITH FAB. TOP DECK CRANKCASE
1	- - - -	2	2	RADIATOR .. Assembly - (L.H. and R.H.) - See P. L. No. 532
2	8040262	1	1	TANK .. Water cooling - Capacity 96.5 gallons
* 3	8117496	1	1	GAUGE .. Water level - See Parts List No. 533
4	8024855	1	-	ELBOW .. Flanged - Offset L.H. - Engine water discharge
4	8061894	-	1	ELBOW .. Flanged - Offset L.H. - Engine water discharge
5	8024315	1	-	ELBOW .. Flanged - Offset R.H. - Engine water discharge
5	8061895	-	1	ELBOW .. Flanged - Offset R.H. - Engine water discharge
6	8025001	2	-	GASKET .. Flanged elbow - Engine water discharge
6	8050425	-	2	GASKET .. Flanged elbow - Engine water discharge
7	8051717	1	-	THERMOMETER .. 3/4 P.T. - 90° angle - 40° - 240°
7	8031666	-	1	GAUGE .. Temperature - 1/2 P.T. - 50° - 300°
8	8065757	1	1	VALVE .. Globe - 1 P.T. brass
9	8127030	1	1	GAUGE .. Water pressure - 0-60 lbs. - See P. L. No. 1076
10	8027843	1	1	VALVE .. Horizontal check - 1/2 P.T. brass
11	8041828	1	1	VALVE .. Globe - 1/2 P.T. brass
+12	- - - -	1	1	HEATER .. Cab - See P. L. No. 4101
13	8049816	1	2	VALVE .. Gate - 1-1/4 P.T. brass
14	8008097	1	1	CONNECTION .. Hose - Water filler - 1/2 P.T. brass
15	179472	1	1	CROSS .. Pipe - 2-1/2 P.T.
+16	- - - -	1	1	ENGINE .. Diesel - See Parts Group 300 and 400
+17	- - - -	1	1	GENERATOR .. Main - See Parts Group 3300

P. L. No. B503

COOLING SYSTEM

PLATE B503-3

Ref. No.	Part Number	No. Req.	Description
1	- - - -	2	RADIATOR .. Assembly - L.H. and R.H. - See P. L. No. 532
1A	8040262	1	TANK .. Water cooling - Capacity with oil cooler in place - 96.5 gal.
* 2	8117496	1	GAUGE .. Water level - See Parts List No. 533
3	8024337	1	SUMP .. Water tank
4	8024338	1	GASKET .. Sump - Water tank
5	8035718	1	HOSE .. Rubber - 3-1/2 I.D. - 8 in. lg.
6	8048702	2	CLAMP .. Hose
7	8072791	1	PIPE .. 3 in. - 21 in. lg.
8	8028507	1	FLANGE .. Inlet - Water pump
9	8028761	1	GASKET .. Water pump inlet flange
10	179888	4	SCREW .. Cap - Inlet flange to water pump - 1/2-13 x 1-7/8 hex. hd.- Replaces 108600
11	103323	22	WASHER .. Lock - 1/2 inch
12	- - - -	A.R.	PIPE .. 2-1/2 in. galvanized - 12 ft. req. - Avail. 20 ft. lg. - 8116742
13	179456	4	ELBOW .. Pipe
14	8035716	3	HOSE .. Rubber - 2-7/8 I.D. - 8 in. lg.
15	8048701	6	CLAMP .. Hose
16	8024316	1	FLANGE .. 2-1/2 P.T. - Water tank
17	8024317	1	GASKET .. 2-1/2 P.T. flange
18	8054036	1	FLANGE .. 1-1/4 P.T.
19	8035995	1	GASKET .. 1-1/4 P.T. flange
20	173827	12	SCREW .. Cap - Flange to water tank - 1/2-13 x 1-1/2 hex. hd.
21	- - - -	A.R.	PIPE .. 1-1/4 in. galvanized - 40 ft. req. - Avail. 20 ft. lg. - 8116833
22	127824	7	ELBOW .. Pipe - 1-1/4 - 90°
23	8123181	5	ELBOW .. Female union - 1-1/4 - 90° galvanized
24	144088	2	TEE .. Pipe - 1-1/4 in.
25	8060993	7	NIPPLE .. Close - 1-1/4 x 1-5/8 lg.
26	8049816	2	VALVE .. Gate - 1-1/4 P.T. brass
27	144139	1	ELBOW .. Pipe - 1-1/4 - 45°
28	8127030	1	GAUGE .. Water pressure - 0 - 60 lbs. - See P. L. 1076
29	100136	4	SCREW .. Cap - 3/8-16 x 1-1/2 hex. hd.
30	103321	4	WASHER .. Lock - 3/8
*31	8025322	1	FLANGE .. Elbow - Crankcase inlet
*32	8029469	1	GASKET .. Elbow flange - Crankcase inlet
33	8066435	1	VALVE .. Angle - 3/4 P.T. brass
34	- - - -	A.R.	PIPE .. 3/4 in. galvanized - 6 ft. req. - Avail. 20 ft. lg. - 8116945
35	179629	1	TEE .. Reducing pipe - 1-1/4 x 3/4 x 1-1/4
36	8060930	1	NIPPLE .. Pipe - 1-1/4 x 1-5/8 lg.
37	8118951	2	UNION .. Female - 1-1/4
38	187971	1	TEE .. Reducing pipe - 1-1/4 x 1-1/4 x 1/2
39	8073275	3	NIPPLE .. Close - 1/2 galvanized
40	8055291	2	VALVE .. Gate - 1/2 P.T. brass
41	116487	2	CONNECTOR .. Flared tube - 5/8 tube x 1/2 female P.T.
42	116488	2	NUT .. Flared tube - 5/8 brass
43	- - - -	A.R.	TUBING .. Copper - 5/8 tube - 3 ft. req. - Avail. 50 ft. lg. - 8116729
44	127964	1	ELBOW .. Pipe - 1 /2 - 45°
45	144129	2	ELBOW .. Pipe - 3/4 - 90°
46	8090716	6	STUD .. Water tank to sump - 1/2-13 x 2
47	429608	6	NUT .. Water tank to sump stud - 1/2-13 hex. - Replaces 173685
48	- - - -	A.R.	PIPE .. 1/2 in. galvanized - 20 ft. req. - Avail. 20 ft. lg. - 8116743
49	8072576	1	PIPE .. 2 in. x 12 in. lg. - Threaded one end
50	186559	1	COUPLING .. Reducing pipe - 2 x 1/2
51	179536	1	ELBOW .. Reducing pipe - 1/2 to 1 - 90°

P. L. No. B503

COOLING SYSTEM

Ref. No.	Part Number	No. Req.	Description
52	127793	4	ELBOW .. Pipe - 1 in. - 90°
53	8007530	1	CAP .. Filler and vent
54	8024336	1	FLASHING .. Filler and vent pipe
55	8024334	1	PIPE .. Filler and vent
56	8118952	2	UNION .. Pipe - 1/2 male and female
57	8118949	1	UNION .. Female pipe - 1/2 galvanized
58	127963	5	ELBOW .. Pipe - 1/2 in. - 90°
59	8008097	1	CONNECTION .. Hose - Water filler - 1/2 P.T. brass
60	- - - -	A.R.	PIPE .. 1 in. galvanized - 8 ft. req. - Avail. 20 ft. lg. - 8116946
61	8123826	2	ELBOW .. Female union - 1/2-90°
62	8041393	1	NIPPLE .. Orifice - 1/2 x 4-1/2 in. lg.
63	8035703	1	HOSE .. Rubber - 13/16 I.D. x 6 in. lg.
64	8048695	4	CLAMP .. Hose
65	8041394	1	NIPPLE .. Orifice
66	8035704	1	HOSE .. Rubber - 13/16 I.D. x 8 in. lg.
67	179457	1	ELBOW .. Pipe - 3 in. - 90°
68	8020712	1	FLANGE .. Filler and vent pipe
69	8020711	1	GASKET .. Flange - Filler and vent pipe
70	103868	3	PLUG .. 1/2-14 square head
71	179472	1	CROSS .. Pipe - 2-1/2 in.
72	189101	1	BUSHING .. Reducing pipe
73	8060940	1	NIPPLE .. Pipe
74	8045194	1	COUPLING .. Pipe
75	8072120	1	FITTING .. Discharge Y
76	191204	1	BUSHING .. Reducing pipe - 2-1/2 to -1-1/4
77	8070513	1	GASKET .. Discharge Y
78	103325	4	WASHER .. Lock - 5/8 in.
79	451967	4	NUT .. Discharge Y to engine - 5/8-11 hex. - Replaces 451967
*80	8035710	1	HOSE .. Rubber - 1-5/8 I.D. x 8 in. lg. - Discharge Y to cab heater
*81	8048698	2	CLAMP .. Hose - Connection hose between discharge Y and cab heater
82	- - - -	1	HEATER .. Cab - See Parts List 4101
83	187427	2	BUSHING .. Reducing pipe - 2 x 1-1/4
84	186750	1	TEE .. Reducing pipe - 1-1/4 x 1/2 x 1-1/4
85	8050090	1	NOZZLE .. 4-1/2 in. lg.
86	8044168	1	ELBOW .. Female - 1/2 - 90°
87	8042825	4	ELBOW .. Pipe - 1/2 - 90°
88	- - - -	A.R.	PIPE .. 1/2 in. - 5 ft. req. - Avail. 20 ft. lg. - 8116834
89	8044251	1	COUPLING .. Pipe - 1/2
90	8041828	1	VALVE .. Globe - 1/2 P.T. brass
91	8027843	1	VALVE .. Horizontal check - 1/2 P.T. brass
92	106642	2	PLUG .. Pipe - 1-1/4 square head
93	190749	1	BUSHING .. Reducing - 2-1/2 x 1/2
94	8072790	1	NIPPLE .. Pipe - 3 x 3-1/2 in. lg.
*95	- - - -	A.R.	TAPE .. Insulating - 3/16 x 1-9/16 - 100 ft. req. - 8058514 - Sold by the foot
*96	8015520	1	GAUGE .. Water temperature - 3-1/2 - See Parts List No. 540

COOLING SYSTEM

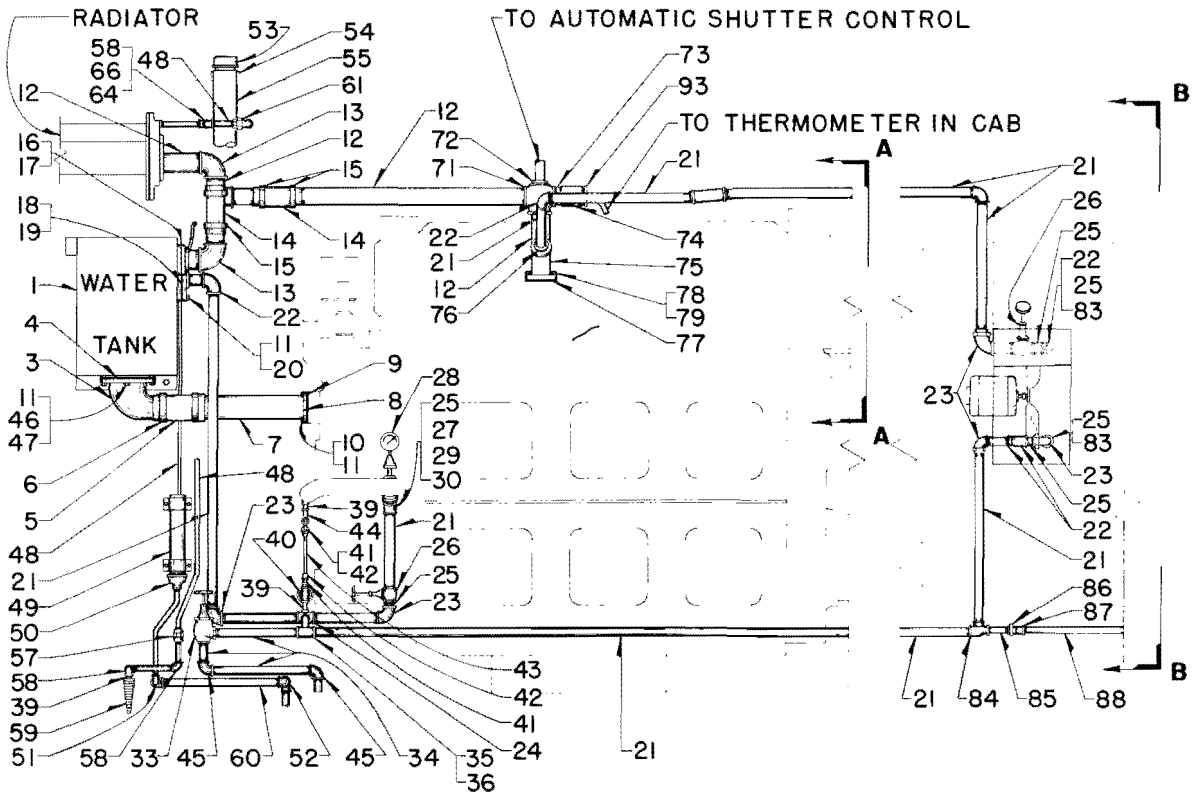

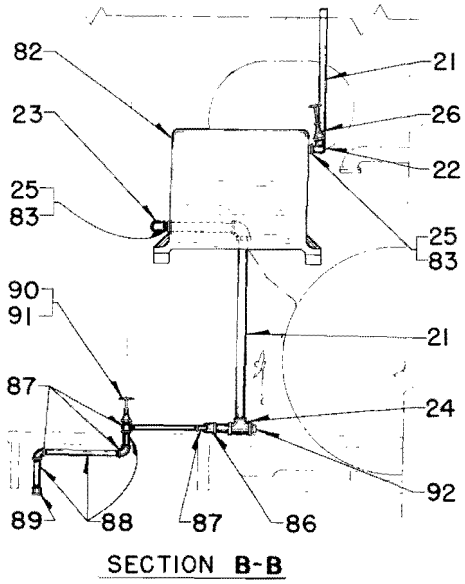

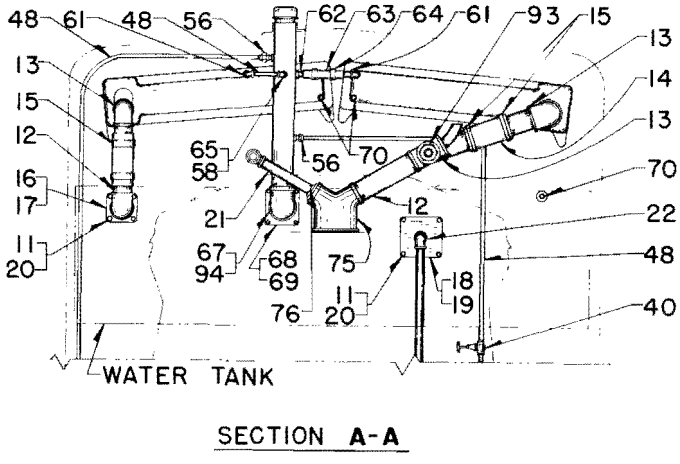

PLATE B503-3

Parts List No. B504

COOLING SYSTEM

NW2, SW7, TR2, TR3, AND TR4 LOCOMOTIVES WITH 567A ENGINES

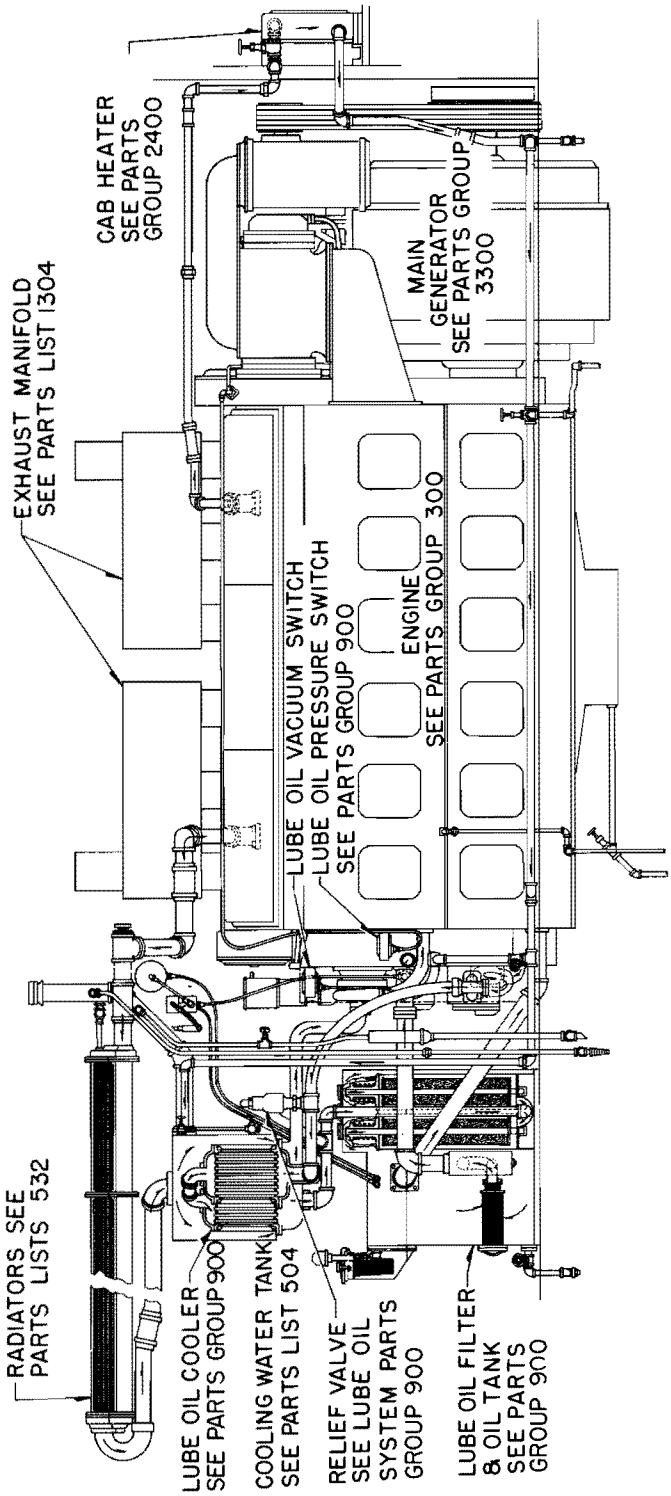

PLATE B504-1

P. L. No. B504

COOLING SYSTEM

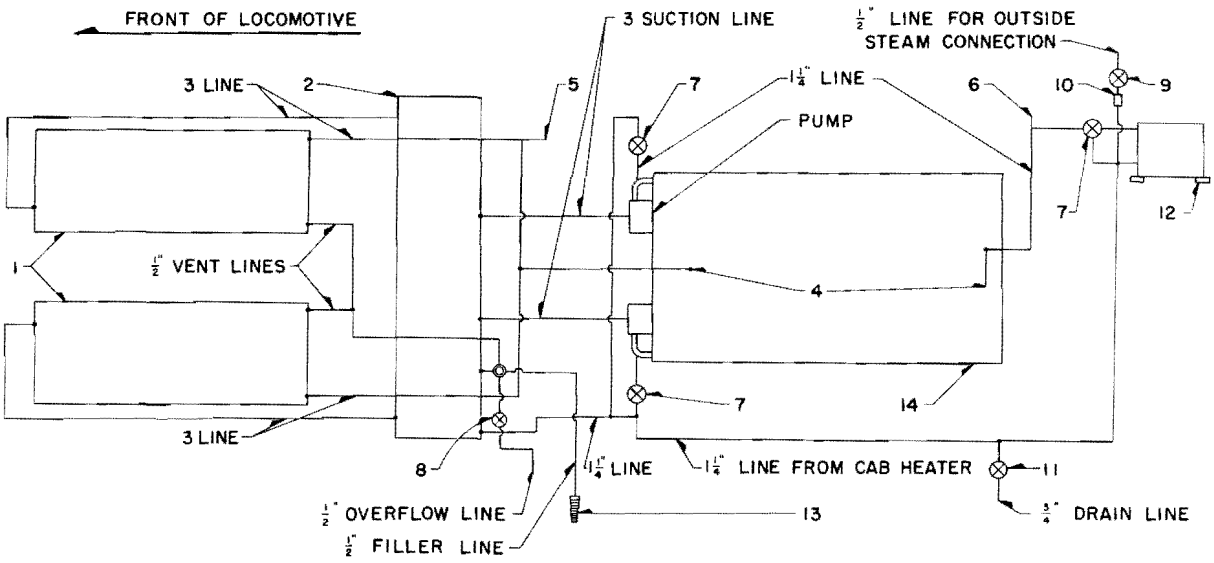

PLATE B504-2

Ref. No.	Part Number	No. Req.	Description
1	-----	2	RADIATOR ASSEMBLY .. See Parts List 532
2	8034105	1	TANK .. Water cooling
* 3	8117496	1	GAUGE .. Water level - See Parts List 533
4	8070513	2	GASKET .. Water discharge elbow
5	8094740	1	SWITCH .. Temperature control - Shutter control - See P.L.5507
6	8157368	1	GAUGE .. 3-1/2 in. dial temperature - Special type No. 618
7	8064723	3	VALVE .. Globe - 1-1/4 in. P.T.
8	8060853	1	VALVE .. Globe - 1/2 in.
9	8041828	1	VALVE .. Globe - 1/2 in.
10	8066547	1	VALVE .. Check - 1/2 in.
11	8041833	1	VALVE .. Globe - 3/4 in. P.T.
12	-----	1	HEATER .. Cab - See Parts Group 2400
13	8008097	1	CONNECTION .. Water filler hose - 1/2 in. P.T.
14	-----	1	ENGINE .. Diesel - See Parts Group 300

COOLING SYSTEM

PLATE B504-3

Ref. No.	Part Number	No. Req.	Description
			ENGINE WATER OUTLET TO RADIATOR PIPING
* 1	-----	1	ELBOW .. Water outlet - See exhaust manifold Parts List 1304 - (Elbow is part of exhaust manifold)
2	8082672	1	GASKET .. Water outlet - Manifold flange to welding flange
3	8139370	1	FLANGE .. Welding - Engine water outlet
4	173828	4	BOLT .. Hex. hd. - Manifold flange to welding flange
5	103323	4	WASHER .. Lock
6	8139369	1	NIPPLE .. Welding - 3 I.P.S.
7	8139368	1	TEE .. Welding - Engine water cross-over line for right and left radiators
8	8139367	2	PIPE .. 3 in. - Tee to hose
9	8035718	4	HOSE .. Connecting - 3-1/2 in. I.D. x 8 in. lg.
10	8048702	8	CLAMP .. Hose
11	8119839	2	NIPPLE .. 3 in. pipe
12	8108132	2	CLAMP .. Pipe
13	186556	2	TEE .. Reducing - 3 x 2 x 3 in. P.T.
14	445528	2	BUSHING .. Reducing - 2 x 3/4 in. P.T.
15	113177	1	PLUG .. Pipe - 3/4 in. sq. hd.
*+15A	8094740	1	SWITCH .. Temperature and shutter control - See P. L. 5507
16	8119840	2	NIPPLE .. 3 P.T. x 3 x 5 in. - Tee to connecting hose
17	8108893	2	NIPPLE .. 3 P.T. x 3 x 11 in. - Connecting hose to radiator
+18	-----	2	RADIATOR ASSEMBLY .. L.H. (4 sections) and R.H. (4 sections) See Parts List 532
			RADIATOR WATER OUTLET TO ENGINE PIPING
20	8024321	2	GASKET .. Return bend to radiator header
21	8034141	2	BEND .. Return - Radiator water outlet
22	-----	A.R.	PIPE .. 3 in. - Approx. 17 ft. req. - Avail. 20 ft. lg. 8116741 - Radiator water return
23	173827	28	BOLT .. Hex. hd.
24	103323	28	WASHER .. Lock
25	8035718	4	HOSE .. Connecting - Radiator water return
26	8048702	8	CLAMP .. Hose
27	8108132	2	CLAMP .. Pipe
28	179465	1	ELBOW .. 3 in. P.T. x 45°
29	8034142	1	ELBOW .. 3 in. P.T. x flange
30	8034131	2	GASKET .. Flanged elbow
31	8034143	2	PLATE .. Cover - Cooling water tank
32	8034105	1	TANK .. Cooling water
*33	8117496	1	GAUGE .. Water level - See Parts List 533
34	8052799	1	FLANGE .. Blind - Cooling water tank
35	8034155	1	GASKET .. Blind flange
36	173825	4	BOLT .. Hex. hd.
37	103323	16	WASHER .. Lock
38	8034133	1	SUMP .. Water tank
39	8034132	1	GASKET .. Water tank
40	8090716	12	STUD .. Water tank to sump

8139228

P. L. No. B504

COOLING SYSTEM

Ref. No.	Part Number	No. Req.	Description
41	429608	12	NUT .. Water tank stud
42	8034134	2	PIPE .. Water pump inlet
43	8028761	2	GASKET .. Water pump inlet
*44	-----	2	PUMP .. Water - R. H. and L. H. - See P. L. 420
			RETURN AND BY-PASS PIPING FOR WATER PUMPS
45	103878	2	PLUG .. Pipe - 1/4 in. - R.H. and L.H. water pump elbow
46	8029469	2	GASKET .. Flange to R.H. and L.H. water pump elbow
47	8025322	2	FLANGE .. 1-1/4 in. P.T. - R.H. and L.H. water pump elbow
48	179845	8	BOLT .. Hex. hd. - Flange to water pump elbow
49	103321	8	WASHER .. Lock
50	8060996	4	NIPPLE .. Short - 1-1/4 P.T.
51	144139	1	ELBOW .. 1-1/4 P.T. x 45° - L.H. water pump piping
52	127824	3	ELBOW .. 1-1/4 P.T. - R.H. water pump piping
53	443865	1	NIPPLE .. 1-1/4 P.T. x 9-1/2 in. - L.H. water pump piping
54	-----	A.R.	PIPE .. 1-1/4 in. - Approx. 4 ft. req. - Avail. 20 ft. lg. 8116833 - R.H. water pump piping
55	8064723	2	VALVE .. Globe - 1-1/4 P.T. - R.H. and L.H. pump piping
56	8060993	1	NIPPLE .. Close - 1-1/4 P.T. - L.H. water pump piping
57	219694	1	NIPPLE .. 1-1/4 x 3 in.. - R.H. water pump piping
58	144088	1	TEE .. 1-1/4 P.T. - L.H. water pump piping
59	219811	1	NIPPLE .. 1-1/4 P.T. x 11 in. - R.H. water pump piping to L.H. water pump piping
60	443864	1	NIPPLE .. 1-1/4 P.T. x 7-1/2 in. - L.H. pump piping
61	8123181	1	ELBOW .. 1-1/4 P.T. union - L.H. pump piping
62	443866	1	NIPPLE .. 1-1/4 P.T. x 10-1/2 in. - L.H. pump piping
63	8108218	1	CLAMP .. Pipe
64	8118953	1	TEE .. 1-1/4 P.T. union - R.H. to L.H. pump piping
65	219694	2	NIPPLE .. 1-1/4 P.T. x 3 in.
66	8123181	1	ELBOW .. 1-1/4 P.T. union
67	-----	A.R.	PIPE .. 1-1/4 in. - Approx. 4-1/2 ft. - Avail. 20 ft. lg. 8116833
68	8035710	1	HOSE .. Connecting - Water return piping to tank
69	8048698	2	CLAMP .. Hose
70	8132009	1	NIPPLE .. 1-1/4 P.T. x 1-1/4 plain x 3 in.
71	127824	1	ELBOW .. 1-1/4 P.T.
72	8052798	1	FLANGE .. 1-1/4 P.T. - Water return piping to tank
73	8034155	1	GASKET .. Flange to water tank
74	173826	4	BOLT .. Hex. hd. - Flange to water tank
75	103323	4	WASHER .. Lock
			WATER TANK FILLER AND RADIATOR DRAIN PIPING
78	8034155	1	GASKET .. Water tank to roof filler stand pipe
79	8150952	1	FLANGE .. Welding - Roof filler stand pipe
80	173826	4	BOLT .. Hex. hd. - Flange to water tank
81	103323	4	WASHER .. Lock
82	8150947	1	NIPPLE .. Welding - Stand pipe
83	8080929	2	ELBOW .. Welding - 3 in. x 45° - Stand pipe
84	8150946	1	PIPE .. Overflow - Stand pipe
85	8150945	1	PIPE .. Filler and vent
86	8007530	1	CAP .. Filler pipe

COOLING SYSTEM

Ref. No.	Part Number	No. Req.	Description
* 87	219647	1	NIPPLE .. 1/2 in. P.T. x 5 in. - Vent line from right radiator to stand pipe
88	219650	1	NIPPLE .. 1/2 in. P.T. x 6 in. - Vent line from left radiator to stand pipe
89	8123826	1	ELBOW .. 1/2 in. P.T. union -Right radiator vent line nipple
90	8119199	2	NIPPLE .. 1/2 in. P.T. x 1/2 in. plain x 2 in.
91	8035704	1	HOSE .. Connecting - Right and left radiator vent line
92	8048695	2	CLAMP .. Hose
93	179626	1	TEE .. 1 x 1/2 x 1/2 in. P.T. reducing
94	8119830	2	NIPPLE .. 1 in. P.T. x 1 plain x 11 in. - Radiators to stand pipe vent lines
95	8108117	2	CLAMP .. Pipe
96	8035708	1	HOSE .. Connecting - Radiators to stand pipe vent line
97	8048697	2	CLAMP .. Hose
98	8119212	1	ELBOW .. 1 in. P.T. union- Radiator vent line to stand pipe
99	8060973	1	NIPPLE .. 1/2 in. P.T. short - Side filler piping to stand pipe
100	8123826	1	ELBOW .. 1/2 in. P.T. x 90° union
101	-----	A.R.	PIPE .. 1/2 in. - Approx. 10 ft. req. - Avail. 20 ft. lg. 8116743
102	127963	3	ELBOW .. 1/2 in. P.T. x 90°
103	8108196	4	CLAMP .. Pipe
104	8035704	1	HOSE .. Connecting - Side filler piping
105	8048695	2	CLAMP .. Hose
106	192079	1	NIPPLE .. 1/2 P.T. x 3-1/2 in. - Side filler piping
107	8108115	1	CLAMP .. Pipe
108	8008097	1	CONNECTOR .. Side filler hose
109	8073275	1	NIPPLE .. 1/2 in. P.T. x close - Radiator drain piping from roof filler stand pipe
110	8123826	1	ELBOW .. 1/2 in. P.T. union - Radiator drain piping
111	-----	A.R.	PIPE .. 1/2 in. - Approx. 5 ft. req. - Avail. 20 ft. lg. 8116743
112	8060858	1	VALVE .. Globe - 1/2 in.
*113	127963	1	ELBOW .. 1/2 P.T. x 90°
114	8108196	1	CLAMP .. Pipe
115	8119155	1	NIPPLE .. 2 P.T. x 2 plain x 11 in. - Radiator drain piping
116	8108228	1	CLAMP .. Pipe
117	187411	1	COUPLING .. 2 x 1 in. P.T. reducing
118	-----	A.R.	PIPE .. 1 in. - Approx. 5 ft. req. - Avail. 20 ft. lg. 8116946 - Radiator drain piping
119	127793	2	ELBOW .. 1 in. P.T.
120	8108215	1	CLAMP .. Pipe
121	8125121	1	NIPPLE .. 1 in. special - Radiator drain piping
122	8108117	1	CLAMP .. Pipe
123	103868	2	PLUG .. Pipe - Radiator

P. L. No. B504

COOLING SYSTEM

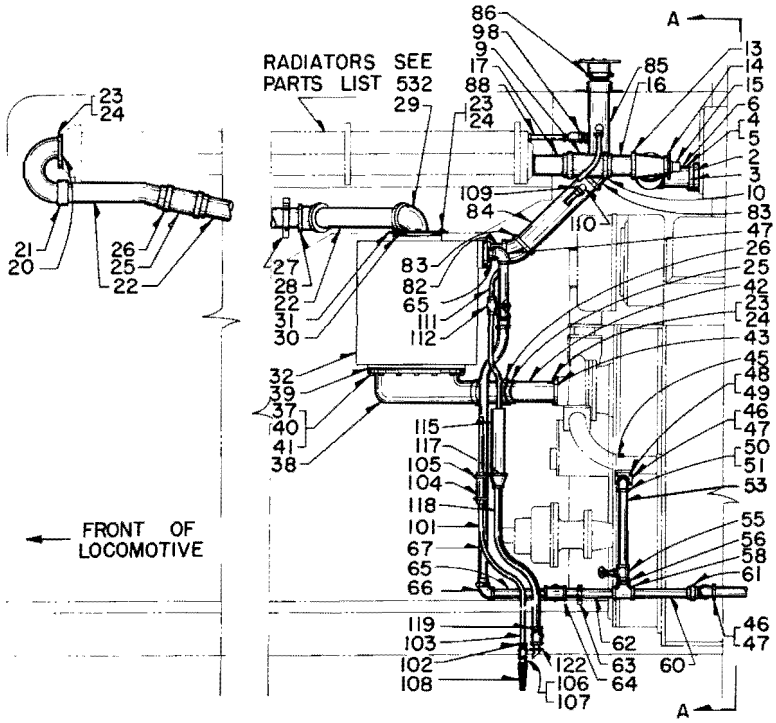

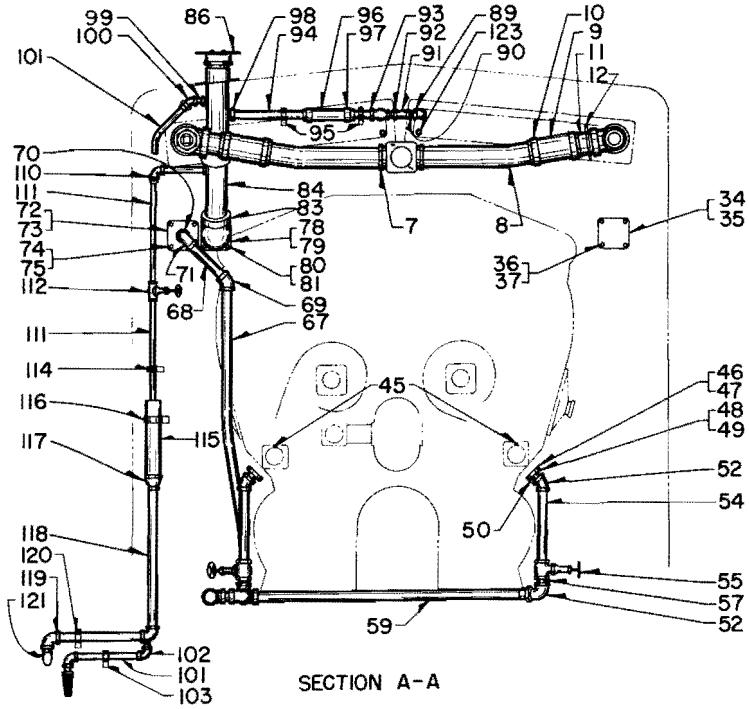

PLATE B504-3

P. L. No. B504

COOLING SYSTEM

CAB HEATER PIPING

PLATE B504-4

Ref. No.	Part Number	No. Req.	Description
			ENGINE WATER OUTLET TO CAB HEATER PIPING
1	8082672	1	GASKET .. Engine water outlet elbow to flange - Cab heater piping
2	8115155	1	FLANGE .. Engine water outlet elbow
3	173828	4	BOLT .. Hex. hd. - Engine water outlet to flange
4	103323	4	WASHER .. Lock
5	-----	A.R.	PIPE .. 1-1/4 in. - Approx. 6 ft. req. - Avail. 20 ft. lg. 8116938
6	137971	4	ELBOW .. 1-1/4 in.
7	451601	1	NIPPLE .. 1-1/4 in. P.T. x 11-1/2 in.
8	192650	1	TEE .. 1-1/4 x 1/2 x 1-1/4 in. N.P.T. - Cab heater piping and temperature gauge outlet
* 9	8157368	1	GAUGE .. 3-1/2 in. dial temperature - Special type No. 618
10	8154499	1	NIPPLE .. 1-1/4 P.T. x 11-1/2 in.
11	8150896	1	CLAMP .. Pipe
12	8035710	1	HOSE .. Rubber connecting - 1-5/8 I.D. x 8 in.
13	8048698	2	CLAMP .. Hose
14	8108222	1	CLAMP .. Pipe
15	144081	1	TEE .. 1-1/4 in. P.T.
16	106642	1	PLUG .. 1-1/4 in. P.T.
17	219360	1	NIPPLE .. 1-1/4 P.T. x 3-1/2 in.
18	8074206	1	TEE .. Union - 1-1/4 in. N.P.T.
19	189068	1	BUSHING .. Reducing - 1-1/4 x 1/2 in. N.P.T.
20	8027428	1	CONNECTOR .. 1/2 N.P.T. x 1/2 in. tube
21	219370	1	NIPPLE .. 1-1/4 in. P.T. x 8 in.
22	8060976	2	NIPPLE .. Short - 1-1/4 in. P.T.
23	8064723	1	VALVE .. Globe - 1-1/4 in. N.P.T.
*24	8044170	1	ELBOW .. Union - 1-1/4 in. P.T.
25	219359	1	NIPPLE .. 1-1/4 in. P.T. x 3 in.
26	187563	1	BUSHING .. Reducing - 2 N.P.T. x 1-1/4 in. N.P.T.
27	-----	1	HEATER .. Cab - See Parts Group 2400
			CAB HEATER TO ENGINE AND DRAIN PIPING
28	187563	1	BUSHING .. Face - 1-1/4 in. P.T.
29	8060930	1	NIPPLE .. Close - 1-1/4 in. P.T.
30	137971	1	ELBOW .. 1-1/4 in.
31	-----	A.R.	PIPE .. 1-1/4 in. - Approx. 1-1/2 ft. req. - Avail. 20 ft. lg. 8116938
32	8108128	1	CLAMP .. Pipe
33	8044170	1	ELBOW .. 1-1/4 in. fem. union
34	-----	A.R.	PIPE .. 1-1/4 in. - Approx. 19 ft. req. - Avail. 20 ft. lg. 8116833
35	144088	1	TEE .. 1-1/4 in. P.T.
36	189068	1	BUSHING .. Reducing - 1-1/4 x 1/2 in.
37	8027437	1	ELBOW .. 1/2 in. tube x 1/2 in. N.P.T.
38	-----	A.R.	TUBING .. 1/2 in. - Approx. 3 ft. req. - Avail. 50 ft. lg. 8116730 - Cab heater by-pass
39	118541	2	NUT .. Tube
40	219811	1	NIPPLE .. 1-1/4 x 11 in.
41	186750	1	TEE .. 1-1/4 x 1/2 x 1-1/4 in. P.T. reducing
42	8108196	1	CLAMP .. Pipe

8139228

P. L. No. B504

COOLING SYSTEM

CAB HEATER PIPING

Ref. No.	Part Number	No. Req.	Description
43	8034966	1	NOZZLE .. Tee to drain piping
44	8118952	1	UNION .. 1/2 F.P.T. x 1/2 in. M.P.T. - Drain piping
45	8066547	1	VALVE .. Check - 1/2 in. - Drain piping
46	8073275	2	NIPPLE .. Close - 1/2 in. P.T. - Drain piping
47	8041828	1	VALVE .. Globe - 1/2 in. - Drain piping
48	8123826	1	ELBOW .. Union - 1/2 in. P.T. - Drain piping
49	8115620	1	NIPPLE .. 1/2 in. P.T. x 7 in. - Drain piping
50	8042825	2	ELBOW .. 1/2 in. P.T. - Drain piping
51	-----	A.R.	PIPE .. 1/2 in. - Approx. 2 ft. req. - Avail. 20 ft. lg. 8116834 - Drain piping
52	8089226	1	NIPPLE .. 1/2 P.T. x 4-1/2 in. - Drain piping
53	8108197	2	CLAMP .. Pipe
54	8044251	1	COUPLING .. 1/2 in. P.T. - Drain piping
55	103868	1	PLUG .. Pipe - 1/2 in. P.T.
56	8123181	1	ELBOW .. 1-1/4 in. P.T. union - Cab heater piping
57	8108119	3	CLAMP .. Pipe
58	187114	1	TEE .. 1-1/4 x 1-1/4 x 3/4 in. P.T. reducing - Cab heater piping
59	8060991	2	NIPPLE .. Close - 3/4 in. P.T. - Drain piping
60	8041833	1	VALVE .. Globe - 3/4 in. P.T. - Drain piping
61	8123865	1	ELBOW .. 3/4 in. P.T. union - Drain piping
62	8125670	1	NIPPLE .. 3/4 P.T. x 3/4 plain x 3 in. - Drain piping
63	144129	2	ELBOW .. 3/4 in. P.T. - Drain piping
64	-----	A.R.	PIPE .. 3/4 in. - Approx. 2 ft. req. - Avail. 20 ft. lg. 8116945 - Drain piping
65	8108214	1	CLAMP .. Pipe
66	445336	1	NIPPLE .. 3/4 in. P.T. x 7-1/2 in. - Drain piping
67	127824	1	ELBOW .. 1-1/4 in. - Cab heater piping
68	8060996	2	NIPPLE .. Short - 1-1/4 in. P.T. - Cab heater piping

COOLING SYSTEM

CAB HEATER PIPING

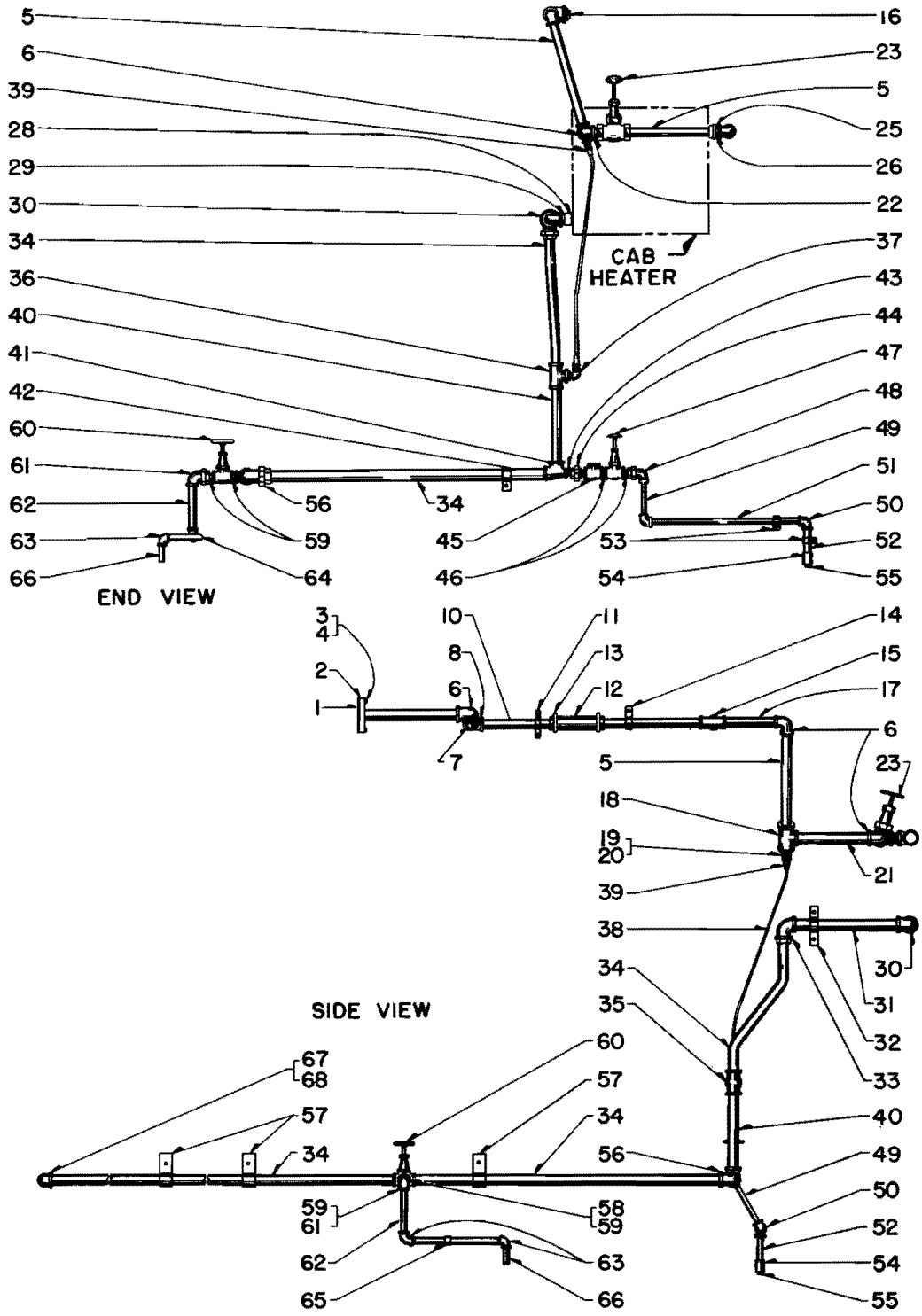

PLATE B504-4

P. L. No. B504

COOLING SYSTEM
AUTOMATIC BY-PASS CONTROL
NW2 AND SW7 LOCOMOTIVES

PLATE B504-5

Ref. No.	Part Number	No. Req.	Description
			NOTE: For original design exhaust manifold see Parts List 1304-Page 3.
* 1	8166482	2	MANIFOLD ASSEMBLY .. Exhaust - See Parts List 1304
* 2	8069042	6	GASKET .. Exhaust manifold
3	8070513	2	GASKET .. Engine water discharge
4	8164676	1	ELBOW .. Water discharge
5	451967	44	NUT .. Hex. - Exhaust manifold to engine
6	114609	44	WASHER .. Lock - External tooth
7	8137334	42	WASHER .. Plain - 5/8 in.
8	8154128	1	NIPPLE .. 3 in. P.T. - Water discharge elbow
9	8164716	1	FLANGE .. Water discharge nipple
10	8146490	1	GASKET .. Flange to elbow
11	8171474	1	ELBOW .. Flanged - Valve by-pass assembly
12	173827	16	BOLT .. Hex. hd.
13	103323	16	WASHER .. Lock
14	8082672	1	GASKET .. Elbow to valve by-pass assembly
15	8161902	1	VALVE ASSEMBLY .. By-pass - See P.L. 509
16	8060997	1	NIPPLE .. Short - 2 in. P.T. - By-pass valve to water tank
17	8044171	1	ELBOW .. 2 in. P.T. union
18	8171467	1	PIPE .. Upper by-pass
19	8035714	1	HOSE .. Connecting - 2-3/8 in. I.D. - By-pass piping
20	8048700	2	CLAMP .. Hose
21	8171468	1	PIPE .. Lower by-pass
22	8050024	1	FLANGE .. 2 in. - Welding
23	8034273	2	COVER .. Handhole - Water tank
24	8024454	2	GASKET .. Handhole cover
*25	179838	36	BOLT .. Hex. hd. - Handhole cover
*26	103321	36	WASHER .. Lock - Handhole cover
*27	8034105	1	TANK .. Water cooling
28	8162099	2	GASKET .. By-pass valve to radiator piping
29	8162098	2	FLANGE .. Radiator piping
30	8162102	2	PIPE .. Water
31	8108106	2	CLAMP .. Pipe
32	8035718	2	HOSE .. 3-1/2 in. I.D.
33	8048702	8	CLAMP .. Hose
34	8153209	4	NIPPLE .. 3 in. P.T. x Plain x 5 in.
35	218673	2	TEE .. Reducing - 3 x 2 x 3 in. P.T.
36	188941	2	BUSHING .. Reducing - 2 x 3/4 in. P.T.
37	103869	1	PLUG .. 3/4 in. P.T.
38	8035717	2	HOSE .. 3-1/2 in. I.D.
39	8154094	2	NIPPLE .. 3 in. P.T. x Plain x 9 in.
40	8060974	1	NIPPLE .. Short - 3/4 in. P.T. - By-pass valve to water tank piping
41	8044169	1	ELBOW .. 3/4 in. P.T. union
42	8171471	1	PIPE .. Upper drain
43	8035705	1	HOSE .. 1 in. I.D.

8171465

COOLING SYSTEM
AUTOMATIC BY-PASS CONTROL

Ref. No.	Part Number	No. Req.	Description
44	8048696	2	CLAMP .. Hose
45	8171466	1	PIPE .. Lower drain
46	8024709	1	FLANGE .. 3/4 in.
47	8158998	1	SWITCH .. Temperature by-pass valve control - See P. L. 5507
48	189069	1	BUSHING .. Reducing - 1-1/4 P.T. x 3/4 in. P.T. - Temperature control switch
*49	8108115	1	CLAMP .. Temperature control switch
50	100750	2	SCREW .. Rd. hd. slotted
51	106496	2	WASHER .. Lock
52	8003765	1	VALVE .. Magnet - See P. L. 4702
53	8155032	1	BRACKET .. Magnet valve
54	179841	4	BOLT .. Hex. hd.
55	103321	8	WASHER .. Lock
56	429607	2	NUT .. Hex.
*57	140675	1	TEE .. 3/8 T. x 1/4 P.T. x 3/8 in. T. - By-pass magnet valve
58	118539	4	NUT .. 3/8 in. tube - By-pass magnet valve
59	-----	A.R.	TUBING .. 3/8 in. O.D. - Approx. 9 ft. req. - Avail. 25 ft. lg. 8116856 - By-pass magnet valve
60	8108111	4	CLAMP .. Tubing
61	8039169	2	ELBOW .. 3/8 in. T. x 3/8 in. P.T. - By-pass magnet valve
62	121323	1	CONNECTOR .. 1/4 in. P.T. x 3/8 in. tube - Piston assembly
63	187343	1	CONNECTOR .. 1/4 in. P.T. x 5/16 in. I.D. hose - Piston asy.
64	8144903	1	HOSE .. Flexible
65	143343	1	ELBOW .. 1/4 P.T. x 5/16 in. I.D. hose - Piston assembly
66	8155034	1	PISTON ASSEMBLY .. By-pass valve - See P. L. 509 - Page 4
67	8022111	1	PIN .. Link - Piston assembly
68	108630	1	PIN .. Cotter - Piston assembly
69	8178160	1	BRACKET .. Piston assembly
70	179818	4	BOLT .. Hex. hd. - Bracket
71	103320	4	WASHER .. Lock - Bracket
			CAB HEATER PIPING
72	8166781	1	ELBOW .. Flanged - Engine water discharge to cab heater piping
73	-----	A.R.	PIPE .. 1-1/4 in. I.P.S. - Approx. 1-1/4 ft. req. - Avail. 20 ft. lg. 8116938
74	137971	1	ELBOW .. 1-1/4 in. P.T.
75	8178159	1	PIPE .. Cab heater piping
76	8171469	1	BRACKET .. Pipe
77	8108129	1	CLAMP .. Pipe
78	8157782	4	CLAMP .. Open end pipe
79	120396	11	WASHER .. Plain
80	218294	1	TEE .. Reducing - 1-1/4 x 1-1/4 x 1 in. P.T.
81	8060975	1	NIPPLE .. Short - 1 in. P.T.
82	144095	1	COUPLING .. Reducing - 1 x 1/2 in. P.T.
83	8178162	1	PIPE .. Tee to cab heater piping

P. L. No. B504

COOLING SYSTEM
AUTOMATIC BY-PASS CONTROL

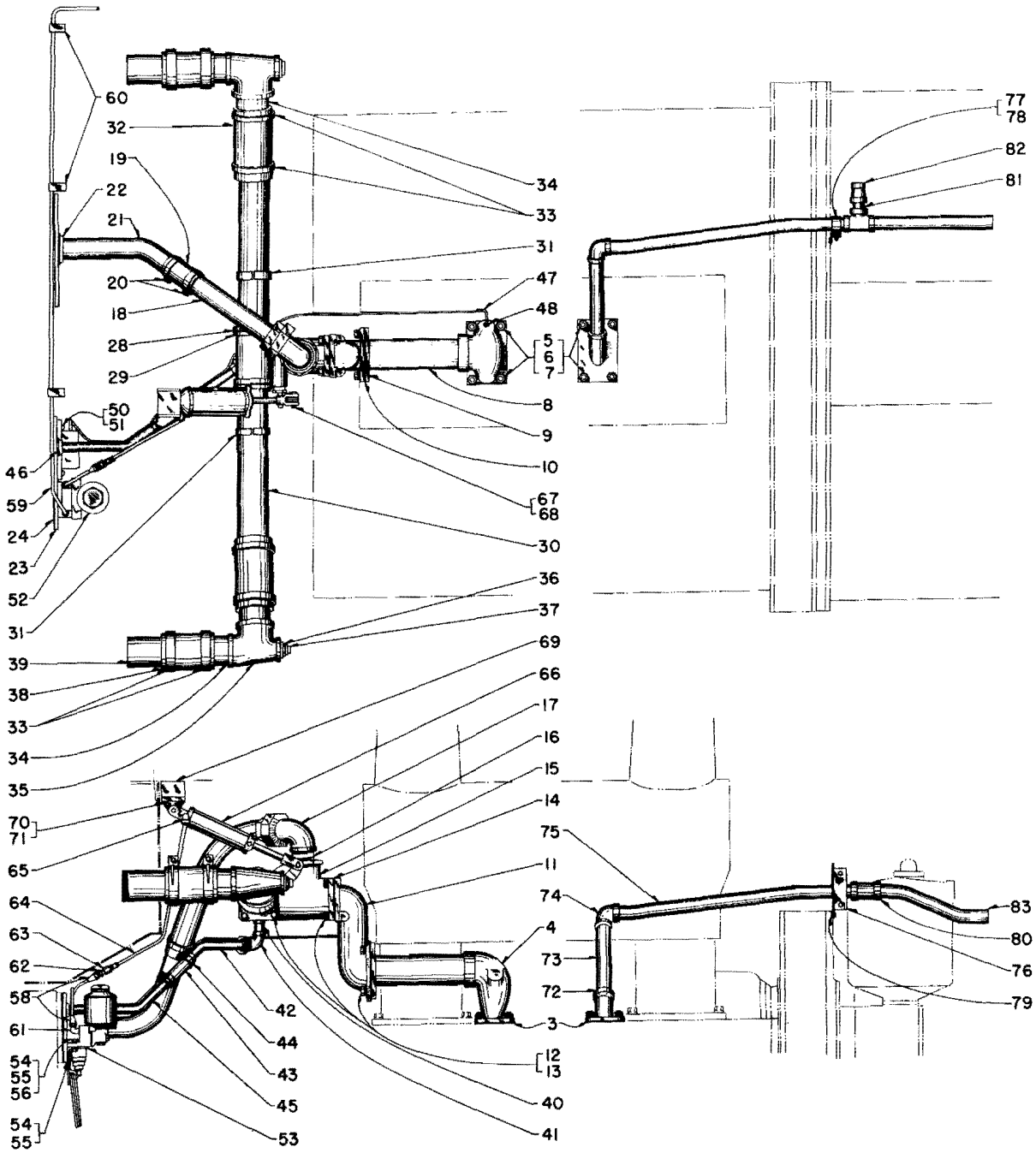

PLATE B504-5

Parts List No. C505

COOLING SYSTEM

E8 LOCOMOTIVE

PLATE A505-1

Ref. No.	Part Number	No. Req.	Description
NOTE: Quantities listed are for one engine.			
1	- - - -	X	TANK ASSEMBLY .. Water - See Parts Group 1000
* 2	- - - -	X	ENGINE WATER LINES .. See P. L. 425
* 3	- - - -	X	PUMP .. Water - See P. L. 420
4	- - - -	X	RADIATOR .. Engine cooling - See P. L. 532
5			Reference number not used.
6	8116749	A. R.	PIPE .. Steel - 2-1/2 in. - Approx. 12 ft. req. - Avail. 20 ft. lg.
7	8041901	1	CAP .. Water filler - 2-1/2
8	219568	1	NIPPLE .. Filler pipe - 2-1/2 x 8
9	191463	2	ELBOW .. Filler pipe - 2-1/2 x 45°
10	8060979	1	NIPPLE .. Filler pipe to tank - Short - 2-1/2 in.
11	8088890	2	NIPPLE .. Filler pipe to tank - 3/4 sol. x P. T.
12	8045930	4	UNION .. Elbow - 3/4 x 90° sol.
13	8133013	A. R.	TUBING .. Copper - 3/4 I. P. S. - Approx. 22 ft. req. - Avail. 20 ft. lg.
14	8062419	2	COUPLING .. 3/4 P. T. x sol.
15	8133050	A. R.	PIPE .. Brass - 3/4 in. - Approx. 2 ft. req. - Avail. 12 ft. lg.
16	144144	2	ELBOW .. 3/4 x 45°
17	8057847	2	NIPPLE .. Hose connection - 3/4
18	8094652	2	CONNECTION .. Hose - Water filler - 3/4
19	8125491	1	PIPE ASSEMBLY .. Water pumps to compressor, steam line and drain
20	8029469	2	GASKET .. Pipe flange to water pump
21	179838	8	BOLT .. Flange to pump - 3/8-16 x 7/8 hex. hd.
22	103321	30	WASHER .. Lock - 3/8
23	8116861	A. R.	TUBING .. Copper - 1-1/4 I. P. S. - Approx. 1 ft. req. - Avail. 12 ft. lg.
24	8062292	1	TEE .. Reducing - 1-1/4 x 1/2 x 1-1/4 - To compressor line
25	- - - -	A. R.	TUBING .. Copper - 1 I. P. S. approx. 3 ft. req. - Avail. 20 ft. lg. - 8113301
26	8091539	1	TEE .. Reducing - 1-1/4 x 1
27	8061470	1	NIPPLE .. 1 P. T. sol.
28	8064150	1	VALVE .. Angle - 1 P. T.
29	8029443	1	VALVE .. Globe - 1 P. T.
30	8146248	1	SPACER .. Sleeve
31	103376	1	PIN .. Cotter
32	8045931	1	ELBOW .. Union
33	8090679	1	NIPPLE .. 1 P. T. x sol. - Elbow to compressor flange
34	8116858	A. R.	TUBING .. Copper - 1/2 I. P. S. - Approx. 5 ft. req. - Avail. 20 ft. lg.
35	8045929	4	UNION .. Female - 1/2 - 90° sol.
36	8054371	1	VALVE .. Check - 1/2 sol. - Steam line
37	8020940	1	VENTURI .. 1/2 sol. - Steam line
38	8061237	1	VALVE .. Globe - 1/2 solder - Steam line
39	144061	1	BUSHING .. Brass - 1 x 1/2 - Compressor return line
40	8131933	2	NIPPLE .. 1/2 sol. x P. T.
41	8095165	3	ELBOW .. 1/2 - 90°
42	8143979	3	COUPLING .. Tank to nipple
*43	116487	2	CONNECTOR .. 5/8 x 1/2 P. T.
44	102637	20	NUT .. Flange to header - Hose conn. 1/2 hex. - Replaces 173865

P. L. No. C505

COOLING SYSTEM

Ref. No.	Part Number	No. Req.	Description
45	103323	64	WASHER .. Lock - 1/2
46	8118710	2	FLANGE .. Radiator piping to tank
47	8055261	2	GASKET .. Flange
*48	179887	11	BOLT .. Flange to tank - 1/2-13 x 1-3/4 hex. hd. - Replaces 173829
49	8118709	2	FLANGE .. Radiator piping to tank
50	8024321	2	GASKET .. Flange to header
51	8112112	2	NIPPLE .. Radiator vent line - 1/2 P. T. x sol.
52	8062418	2	COUPLING .. Vent line - 1/2 P. T. x 1/2 sol.
53	116487	2	CONNECTOR .. Vent line - 1/2 P. T. x 1/2 tube
*54	8148934	1	PIPE .. Water vent
55	191463	1	ELBOW .. Vent pipe
56	8058494	2	HOSE .. Flexible water - 3 inch
*57	8126649	2	GASKET .. Flexible hose
*58	179883	24	BOLT .. 1/2-13 x 1-1/4 hex. hd. - Replaces 173825
*59	179884	4	BOLT .. 1/2-13 x 1-3/8 hex. hd. - Replaces 173836
60	8135183	1	ELBOW .. Water discharge
61	8135201	1	PIPE ASSEMBLY .. Water discharge
62	8146490	2	GASKET .. Pipe assembly to elbow
63	179887	17	BOLT .. 1/2-13 x 1-3/4 hex. hd. - Replaces 173829
64	120396	12	WASHER .. Plain - Replaces 103343
65	8070513	2	GASKET .. Water discharge elbow to crankcase
66	8080858	1	FLANGE .. Blind
67	451967	8	NUT .. 5/8-11 hex. - Bronze
68	8137334	8	WASHER .. Plain
69	114609	8	WASHER .. Lock - External tooth - 5/8 in.
70	8146488	1	ELBOW .. Flanged discharge
71	113176	1	PLUG .. Pipe - 1/2-14
72	8135098	1	TEE .. Water discharge
73	8109537	4	FLANGE .. Hose
74	8189924	2	HOSE .. Connecting - Replaces 8109536
75	8166525	4	CLAMP .. Hose
76	8055261	4	GASKET .. Water discharge tee
77	8135185	2	ELBOW .. Water discharge
78	8081192	2	GASKET .. Radiator header plate
79	8148715	1	FLANGE .. Blind - Water discharge elbow
80	8088988	1	GASKET .. Blind flange
81	8178411	1	SWITCH ASSEMBLY .. Thermostat
82	179890	22	BOLT .. 1/2-13 x 2-1/4 hex. hd. - Replaces 173837
83	8014438	8	STUD .. 3/8-16 x 1-5/8 - Threaded both ends
84	102635	8	NUT .. 3/8-16 hex. - Replaces 429607
85	8098703	1	GASKET .. Switch mounting
*86	8144119	1	VALVE .. Regulating - Cab heater line - 1 PT - Set at 5 lbs.
*87	8140483	1	GASKET .. Cab heater flange gasket
*88	8196969	1	VALVE .. Vertical
*89	8123425	1	VALVE .. Relief - 1/2 P. T.
*90	8034060	1	TRAP .. Steam - 1/2 P. T.
91	8099907	1	GAUGE .. Temperature

8148805

P. L. No. C505

COOLING SYSTEM

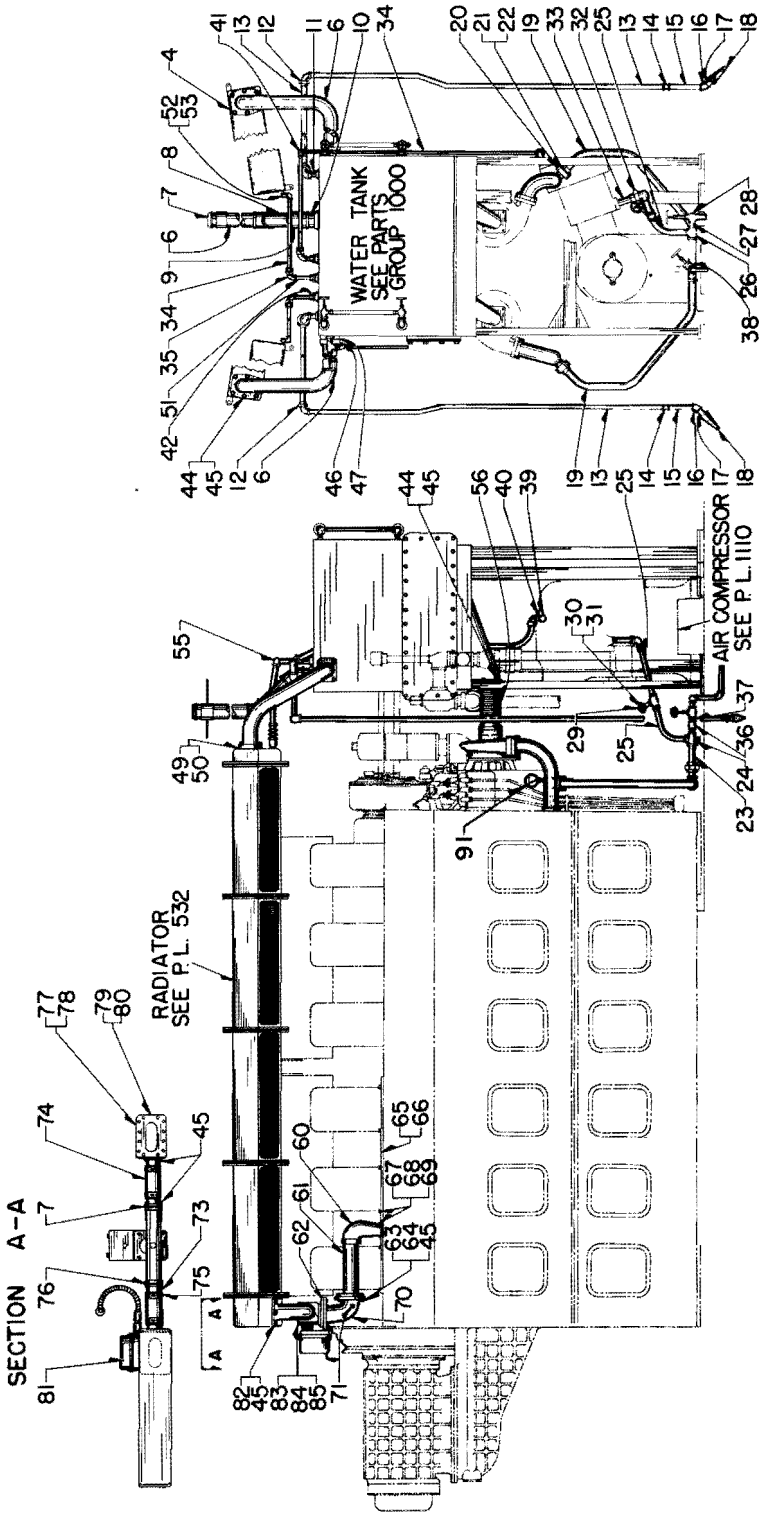

PLATE A505-1

COOLING SYSTEM

Parts List No. B507

RADIATOR AND PIPING
SW8, SW9, TR5, AND TR6 LOCOMOTIVES

PLATE A507-1

Ref. No.	Part Number	No. Req.	Description
1	- - - -	1	RADIATOR ASSEMBLY .. Right hand - See P. L. 532 for detail
2	- - - -	1	RADIATOR ASSEMBLY .. Left hand - See P. L. 532 for detail
3	3129239	6	CORE .. Radiator - Replaces 8501534
4	8162762	2	HEADER .. Front (R.H. radiator) - Rear (L.H. radiator)
5	8165089	2	HEADER .. Front (L.H. radiator) - Rear (R.H. radiator)
6	8094895	4	SUPPORT .. Header - Both ends
7	8081189	12	PLATE .. Clamp - Core to core and core to header
8	8094857	8	PLATE .. Clamp - Core to core - Radiator
9	8024328	24	CLIP .. Baffle - Clamp plate - Radiator
10	8024331	12	PLATE .. Baffle - Radiator core
11	8018975	8	GASKET .. Core to core and core to header
* 12	8088384	2	SCREEN .. Header to core
13	173829	272	BOLT .. Hex. hd. - Core to core and core to header
14	173836	16	BOLT .. Hex. hd. - Core to core having baffle clips
15	429608	288	NUT .. Hex. - Core to core and core to header
16	103323	320	WASHER .. Lock - Core to core and core to header
17	103868	2	PLUG .. Pipe - Front (L.H. radiator) Rear header (R.H. radiator)
18	100158	32	BOLT .. Hex. hd. - Core to header at inlet and outlet holes
19	8135732	10	PIN .. 1/2 - Support - Radiator mounting
20	8031594	2	PIN .. Radiator support
21	103374	12	PIN .. Cotter - Radiator support mounting pins
22	120396	24	WASHER .. Plain - Radiator support pins
23	173865	4	BOLT .. Hex. hd. - Radiator support mounting
24	8035134	4	NUT .. Self locking - Radiator support mounting
25	8104416	8	SPACER .. Radiator support mounting nut and bolt
26	8162739	1	PLATE .. Front baffle - Radiator mounting assembly
27	8162740	1	PLATE .. Front baffle - Radiator mounting assembly
28	8162737	1	PLATE .. Rear baffle - Right side - Radiator mounting asy.
29	8162738	1	PLATE .. Rear baffle - Left side - Radiator mounting asy.
30	8162736	2	PLATE .. Side baffle - Radiator mounting assembly
* 31	8165035	2	PLATE .. Center baffle - Radiator mounting
* 32	8165300	2	ANGLE .. Baffle support - Radiator mounting
* 33	8032663	4	ANGLE .. Core - Radiator mounting
34	171482	164	SCREW .. Center baffle plate to angle baffle support
35	110500	16	SCREW .. Angle to front baffle support
36	106497	16	WASHER .. Lock - Angle to front baffle plate
37	110633	16	NUT .. Hex. - Angle to front baffle plate
			ENGINE WATER OUTLET TO RADIATOR PIPING
38	8070513	2	GASKET .. Engine to water outlet elbow
39	8164676	1	ELBOW .. Engine water outlet
40	451967	6	NUT .. Hex. - Water outlet elbow to engine and brackets to engine
41	114609	6	WASHER .. Water outlet elbow and bracket nuts
42	8164717	1	PIPE .. Water outlet elbow - Through exhaust chamber to elbow
43	8146490	1	GASKET .. Pipe through exhaust chamber to elbow

P. L. No. B507

COOLING SYSTEM

Ref. No.	Part Number	No. Req.	Description
			ENGINE WATER OUTLET TO RADIATOR PIPING (Cont'd.)
44	8164709	1	ELBOW .. Pipe through exhaust chamber to hose
45	8164737	1	BRACKET .. Engine to hose connecting elbow - Left side
46	8164738	1	BRACKET Engine to hose connecting elbow - Right side
47	173827	4	BOLT .. Hex. hd. - Bracket to elbow and elbow to pipe
48	103323	42	WASHER .. Lock - Water outlet connections
49	120396	2	WASHER .. Plain - Hose connecting elbow to pipe
50	8035718	2	HOSE .. Elbow to tee connection and water inlet tubing to equipment rack
51	8048702	4	CLAMP .. Hose - Water outlet and inlet
52	8163921	1	CONNECTION .. Water - Hose to tee
53	8164970	1	BRACKET .. Water outlet connection
54	173825	2	BOLT .. Hex. hd. - Water connection bracket
55	8028761	1	GASKET .. Tee to water connection
56	8164929	1	TEE .. Connection to pipes connecting radiator
57	173829	4	BOLT .. Hex. hd. - Tee to connection
58	8031624	2	GASKET .. Tee to pipe flange
59	8164931	2	FLANGE .. Tee to pipes connecting radiator
60	173836	8	BOLT .. Tee to pipe flange
61	8164930	2	PIPE .. Tee to radiator assembly
62	8164772	4	COVER .. Radiator - Pipes
63	8118709	2	FLANGE .. Pipe to radiator header
64	8024321	4	GASKET .. Pipes to radiator header - Outlet and inlet
65	173827	24	BOLT .. Water inlet and outlet flange to radiator
			WATER RETURN FROM RADIATOR TO EQUIPMENT RACK
66	8149099	2	NIPPLE .. 1/2 P.T. x 10 - Radiator to elbow - Water outlet end
67	144283	2	ELBOW .. Nipple to 5/8 inch O.D, tube
68	- - - -	A.R.	TUBING .. 5/8 inch O.D. - Nipple elbow to tee - Available in 50 ft. lengths - 8116729 - Approx. 3 ft. required
69	116488	4	NUT .. Nipple elbow to tube and tube to tee
70	144300	1	TEE .. Tubes to equipment rack bushing
71	144034	1	BUSHING .. Tee to equipment rack assembly
72	8164106	2	BEND .. Return - Radiator to copper tube
73	8165313	2	TUBE .. Copper 2-1/2 I.P.S. - Return bend to Y-connection
74	8164181	1	CONNECTION .. Y-2-1/2 I.P.S. tubing to 3 I.P.S. tubing
75	8049150	A.R.	TUBING .. Copper - 3 I.P.S. - Approx. 40 inches required - Order by foot quantities - Y-connection to hose connecting equipment rack
76	8108106	1	CLAMP .. 3 I.P.S. tubing - Y connection end
77	8108132	1	CLAMP .. 3 I.P.S. tubing - Hose end
78	- - - -	1	RACK .. Equipment - See Parts List 1000

P. L. No. B507

COOLING SYSTEM

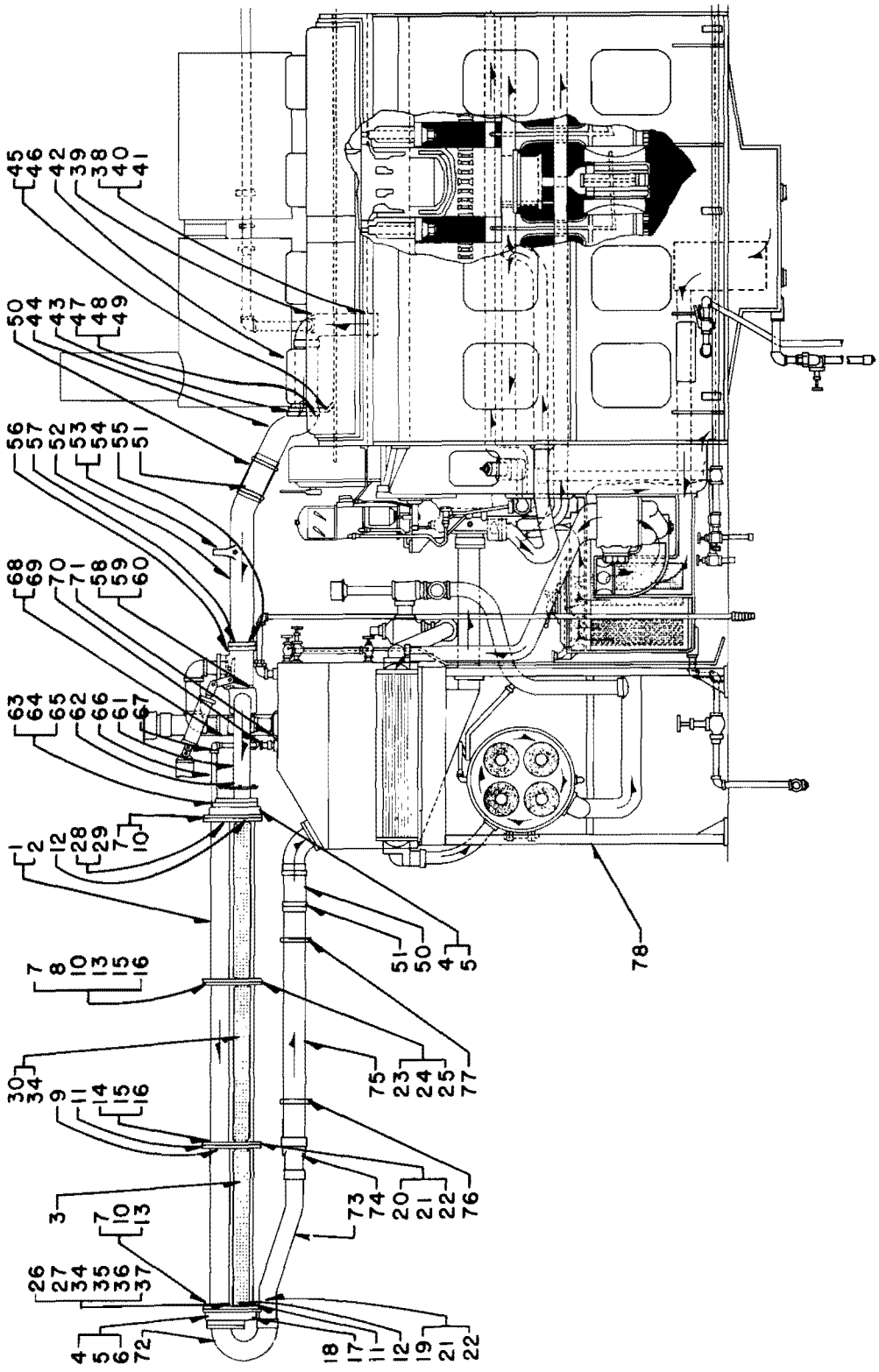

RADIATOR AND PIPING

PLATE A507-1

P. L. No. B507

COOLING SYSTEM

CAB HEATER PIPING

PLATE A507-2

Ref. No.	Part Number	No. Req.	Description
1	219374	1	NIPPLE .. 1-1/4 P.T. x 12 - Water outlet elbow from engine
2	8042828	1	ELBOW .. 1-1/4 P.T. - Water outlet nipple
3	8154441	1	NIPPLE .. 1-1/4 P.T. x 6 - Elbow to rubber hose
4	8035710	1	HOSE .. Rubber - 1-5/8 I.D.
5	8048698	2	CLAMP .. Rubber hose
6	- - - -	A.R.	PIPE .. 1-1/4 - Steel - Hose to cab heater - Approx. 14 ft. req. - Available in 20 feet lengths - 8116938
7	- - - -	A.R.	TAPE .. Pipe insulating - 1-9/16 x 3/16 - Cover approx. 14 ft. lengths of 1-1/4 pipe - Available in 50 ft. lengths - 8105873
8	8108218	3	CLAMP .. Pipe
9	144066	1	COUPLING .. 1-1/4 pipe
10	137971	4	ELBOW .. 1-1/4 pipe
11	219359	2	NIPPLE .. 1-1/4 x 3
12	8044170	2	ELBOW .. 1-1/4 P.T. female union
13	219368	1	NIPPLE .. 1-1/4 P.T. x 7
14	8060976	2	NIPPLE .. Short - 1-1/4 P.T.
15	8064723	1	VALVE .. Globe - 1-1/4 N.P.T.
16	187563	1	BUSHING .. Reducing - 2 N.P.T. x 1-1/4
17	- - - -	1	HEATER .. Cab - See Parts List 4101
			CAB HEATER WATER RETURN PIPING
18	187563	1	BUSHING .. Face - 1-1/4 P.T. - Water return
19	8060930	1	NIPPLE .. Close - 1-1/4 P.T.
20	137971	2	ELBOW .. 1-1/4 P.T.
21	219373	1	NIPPLE .. 1-1/4 P.T. x 11
22	8108126	1	CLAMP .. Pipe - Nipple
23	8044170	1	ELBOW .. 1-1/4 female union
24	- - - -	A.R.	PIPE .. 1-1/4 - Steel - Approx. 20 ft. req. - Available in 20 ft. lengths - 8116752
25	- - - -	A.R.	TAPE .. Pipe insulating - 1-9/16 x 3/16 - Cover 1-1/4 steel pipe - Approx. 20 ft. length - Available in 50 ft. length - 8105873
26	8044157	1	UNION .. 1-1/4 female
27	8108218	5	CLAMP .. Pipe
28	8077353	1	TEE .. 1-1/4 P.T. union
29	- - - -	A.R.	PIPE .. 1-1/4 - Steel - Approx. 25 inches req. - Available in 20 foot length - 8116938
30	8169320	1	STEM .. Steam orifice
31	8169321	1	NUT .. Steam orifice
32	8088722	2	NIPPLE .. 1/2 P.T. x 2 - Steel
33	8041830	1	VALVE .. 1/2 P.T. - Horizontal check
34	8108196	1	CLAMP .. Pipe
35	219335	1	NIPPLE .. 1/2 P.T. x 8
36	8041828	1	VALVE .. 1/2 P.T. - Globe
37	8044168	1	ELBOW .. 1/2 P.T. union
* 38	8157782	12	CLAMP .. Open end - Insulation - Approx. 36 inches intervals and fittings

P. L. No. B507

COOLING SYSTEM

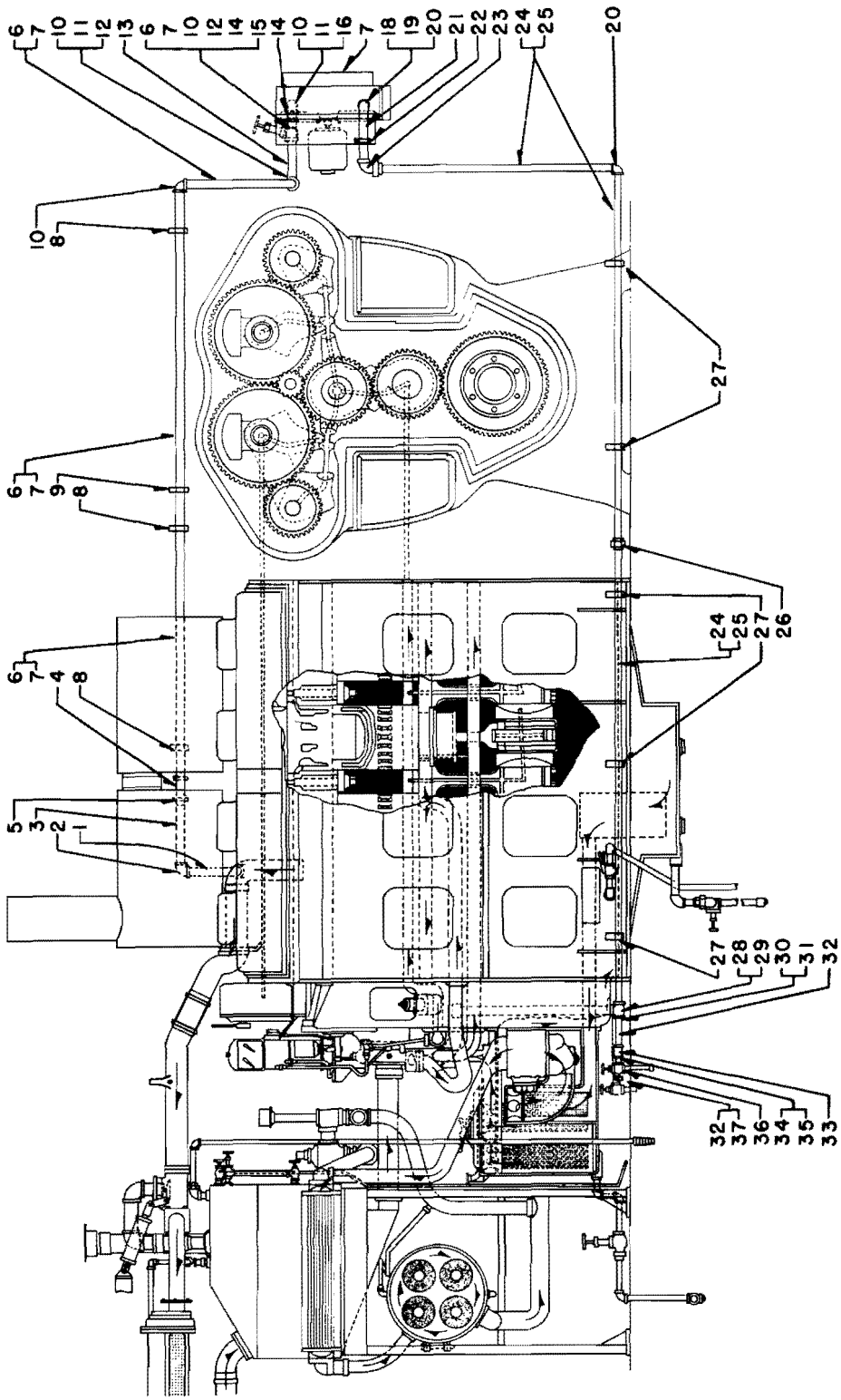

CAB HEATER PIPING

PLATE A507-2

P. L. No. B507

COOLING SYSTEM

AUTOMATIC WATER BY-PASS CONTROL
SW8, SW9, TR5, AND TR6 LOCOMOTIVES WITH FOUR INCH RADIATORS
SW8, SW9, SW600, SW900, SW1200 WITH SIX INCH RADIATORS

PLATE B507-3

NOTE: Automatic by-pass control is optional equipment with switcher and transfer locomotives to overcome subnormal cooling water temperatures under extremely low temperature conditions. For by-pass valve application to the NW2 and SW7 locomotives, see P. L. 504, Page 10.

Ref. No.	Part Number	No. Req.		Description
		X	-	WITH FOUR INCH RADIATORS
		-	X	WITH SIX INCH RADIATORS
1	8180595	1	1	VALVE ASSEMBLY .. By-pass - See Plate 507-4 - Replaces 8161902
2	8060937	1	-	NIPPLE .. Close pipe - 2 P.T.
3	189777	2	-	ELBOW .. Pipe - 2 P.T.
3	191034	-	2	ELBOW .. Pipe - 2-1/2 P.T.
4	8170645	1	-	BRACKET .. Air cylinder
4	8180596	-	1	BRACKET .. Air cylinder
5	8180597	1	1	CYLINDER ASSEMBLY .. By-pass valve air - See P. L. 520 - Replaces 8155034
6	219538	1	-	NIPPLE .. Pipe - 2 P.T. x 7 in. lg.
6	8112865	-	1	NIPPLE .. Pipe - 2-1/2 P.T. x 6-1/2 lg.
7	8152862	2	-	NIPPLE .. Pipe - 2 P.T. x 4-1/2 in. lg. - Thread one end only
7	8153279	-	2	NIPPLE .. Pipe - 2-1/2 P.T. x 4-1/2 in. lg. - Thread one end only
8	8048700	2	-	CLAMP .. Hose
8	8048701	-	2	CLAMP .. Hose
9	8035713	1	-	HOSE .. Connecting rubber - 2-3/8 in. I.D. x 6 in. lg.
9	8035715	-	1	HOSE .. Connecting rubber - 2-7/8 in. I.D. x 6 in. lg.
10	8060961	2	2	NIPPLE .. Close pipe - 3/4 P.T. - Cooling tank and valve
11	119099	3	3	ELBOW .. Pipe - 3/4 P.T.
12	8112402	2	2	NIPPLE .. Pipe - 3/4 P.T. x 6 in. lg. - Thread one end only
13	8048696	2	2	CLAMP .. Hose
14	8035705	1	1	HOSE .. Rubber - 1 I.D. x 6 in. lg.
15	179820	4	-	BOLT .. 5/16-18 x 1-1/2 hex. head - Replaces 100123
15	179890	-	3	BOLT .. 1/2-13 x 2-1/4 hex. head
16	103320	4	-	WASHER .. Lock - 5/16
16	120396	-	3	WASHER .. Plain - 1/2
17	431793	4	-	NUT .. 5/16-18 hex.
18	8060974	1	-	NIPPLE .. Short pipe - 3/4 P.T.
18	219342	-	1	NIPPLE .. 3/4 P.T. x 5-1/2
*19	8022111	1	1	PIN .. Link
*20	103385	1	1	PIN .. Cotter - 1/8 x 1
21	- - - -	A	A	TUBING .. Copper - 3/8 O.D. - Approximately 19 ft. required -
		R	R	Available 25 ft. - 8116856 - Air system to magnet valve
*22	118807	1	1	TEE .. Flared tube - 3/8
23	121758	6	6	NUT .. Flared tube - 3/8
24	118750	2	2	CONNECTOR .. Flared tube - 3/8 tube x 1/4 P.T.
25	8078817	1	1	COCK .. Cut-out - 1/4 P.T.
26	8061466	1	1	NIPPLE .. Short - 1/4 P.T. extra heavy brass
27	8004170	1	1	FILTER .. Air - See P. L. 1073
28	8108119	1	1	CLAMP .. Pipe
29	118539	4	4	NUT .. Flared tube - 3/8
30	8124200	1	1	BOX .. Conduit - Air magnet valve

8180594 8169794 8170957

P. L. No. B507

COOLING SYSTEM

Ref. No.	Part Number	No. Req.		Description
		X	-	WITH FOUR INCH RADIATORS
		-	X	WITH SIX INCH RADIATORS
31	8158998	1	1	SWITCH .. By-pass temperature control - See P. L. 5507
32	8132379	1	1	BRACKET .. Temperature control switch
33	8112996	1	1	BRACKET .. Temperature control switch
34	100751	2	2	SCREW .. 8-32 x 1/2 round head slotted
35	106496	2	2	WASHER .. Lock - No. 8
36	8003765	1	1	VALVE .. Air magnet - See P. L. 4702
37	429607	2	2	NUT .. 3/8-16 hex.
38	103321	2	2	WASHER .. Lock - 3/8
39	179841	2	2	BOLT .. 3/8-16 x 1-1/4 hex. head
40	8126723	1	1	CONNECTOR .. Air magnet valve
41	8039169	2	2	ELBOW .. 3/8 tube x 3/8 P.T.
42	8108111	8	8	CLAMP .. Air tube - Air cylinder
43	8144125	1	1	HOSE .. Connecting - Air cylinder
44	8106068	1	1	UNION .. Reducing - 3/8 x 1/2 P.T.
*45	8110192	1	-	BRACKET .. Air cylinder mounting

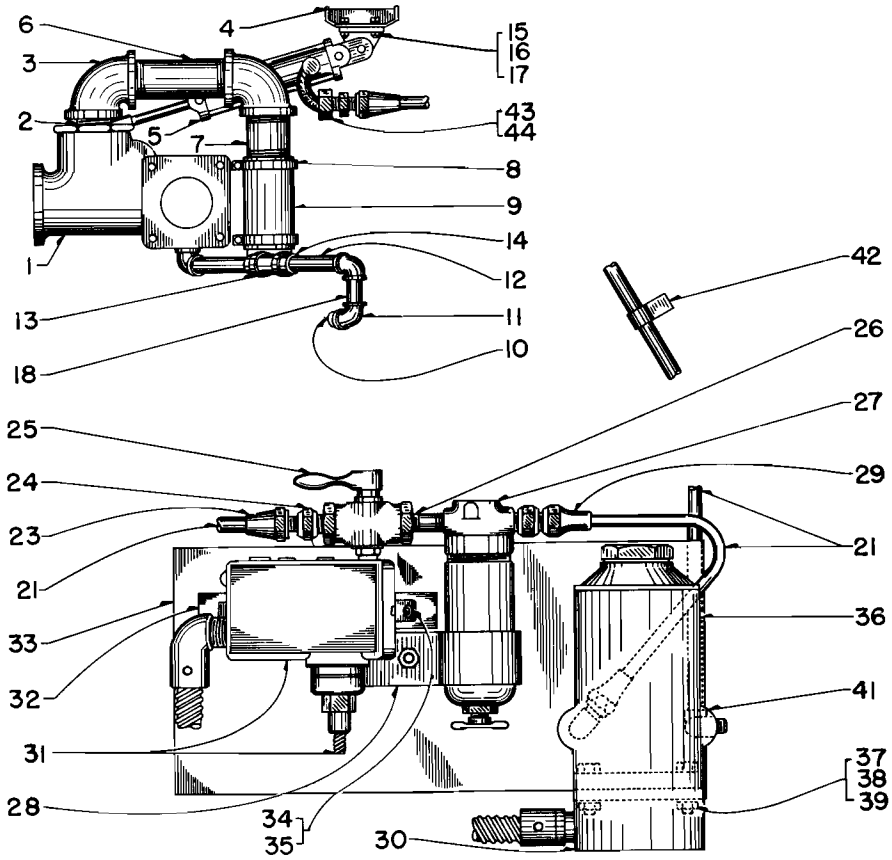

AUTOMATIC WATER BY-PASS CONTROL
SW8,SW9,SW600,SW900,SW1200,TR5,TR6 LOCOMOTIVES

PLATE B507-3

P. L. No. B507

COOLING SYSTEM

BY-PASS VALVE ASSEMBLY
SW8, SW9, SW600, SW900, SW1200, TR5, TR6 LOCOMOTIVES

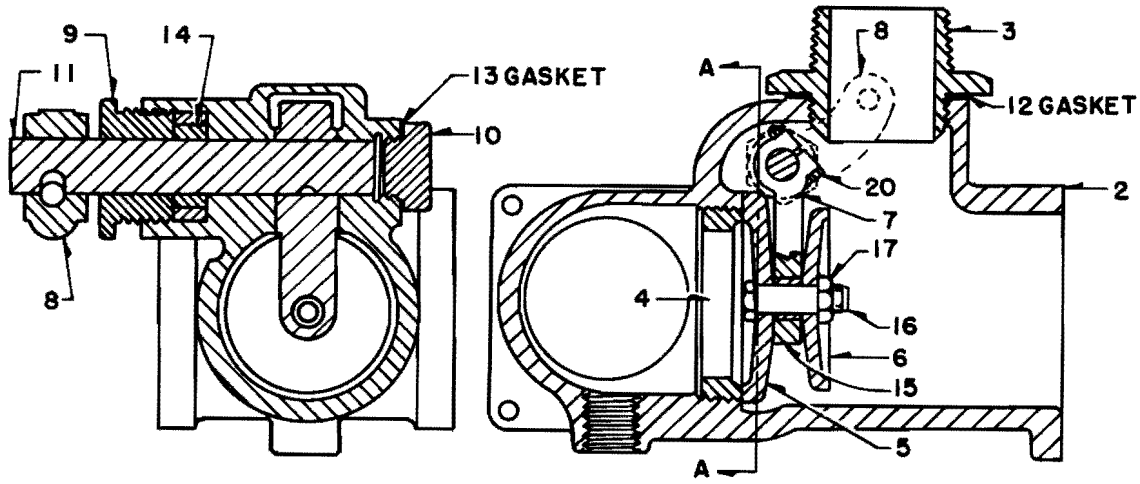

SECTION A-A

REF. NO. 1A

PLATE B507-4

NOTE: By-pass assembly also applied to NW2 and SW7 locomotives when new design exhaust manifold is applied. See P. L. 504.

Ref. No.	Part Number	No. Req.		Description
* 1	8180595	X	-	VALVE ASSEMBLY .. By-pass - Replaces 8161902
1A	8161902	-	X	VALVE ASSEMBLY .. By-pass
2	8161903	1	1	BODY .. By-pass valve
3	8180598	1	-	SEAT .. By-pass valve
*3A	8155038	-	1	SEAT .. By-pass valve
4	8155039	1	1	RING .. Valve seat
5	8155047	1	1	VALVE
6	8155048	1	1	VALVE
7	8155040	1	1	LEVER .. Valve
8	8155041	1	1	LEVER .. Cylinder
9	8155042	1	1	GLAND
10	8155043	1	1	CAP
11	8155044	1	1	SHAFT
12	8155050	1	1	GASKET
13	8155049	1	1	GASKET
*14	8155045	1	1	PACKING
15	8155046	1	1	SPACER .. Valve
/16	187075	1	2	BOLT .. Valve to valve - 3/8-16 x 1-3/4 hex. hd. - Stainless
17	8173589	1	1	NUT .. Lock - Brass type - 3/8-16 hex.
18	103321	1	1	WASHER .. Lock - 3/8
*19	179841	1	1	BOLT .. Cylinder lever - 3/8-16 x 1-1/4 hex. hd.
/20	187074	2	2	BOLT .. Lever to shaft - 3/8-16 x 1-1/4 hex. hd. - Stainless

/ 187074 replaces 179841
187075 replaces 179845

Parts List No. A508

COOLING SYSTEM
GP7 LOCOMOTIVE

PLATE A508-2

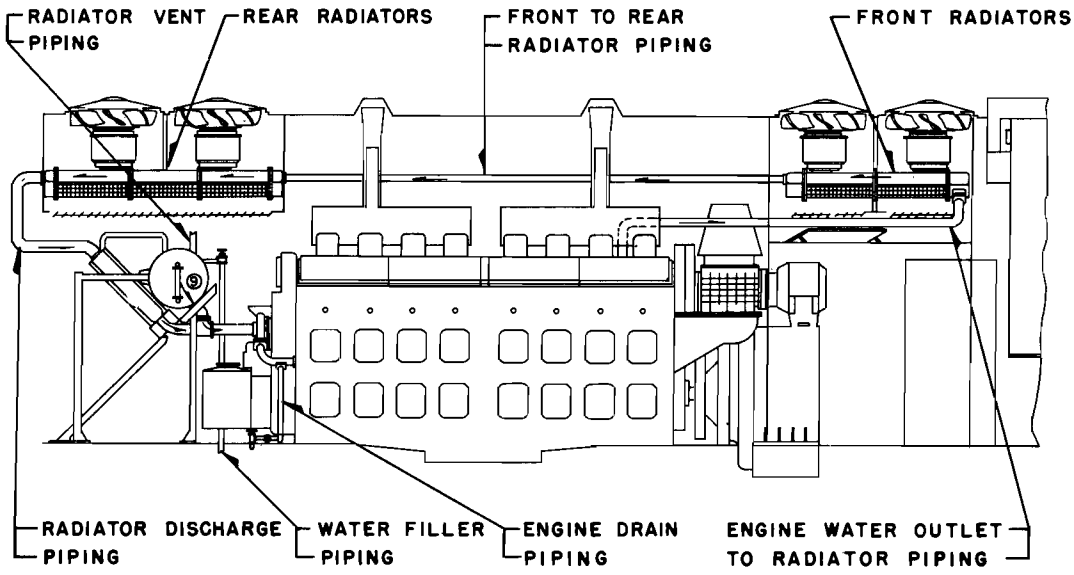

PLATE A508-1

Ref. No.	Part Number	No. Req.	Description
			Engine Water Outlet to Radiator Piping
1	8164315	1	ELBOW .. Crankcase - Rear water discharge
*+ 2	8080858	1	FLANGE .. Crankcase blind - Front water discharge
+ 3	8070513	2	GASKET .. Crankcase
+ 4	8137334	8	WASHER .. Plain
+ 5	114609	8	WASHER .. Lock
+ 6	451967	8	NUT .. Hex.
+ 7	8155843	A.R.	STUD .. Exhaust manifold - Part of crankcase - Parts List No.315 for oversizes
8	8022296	2	GASKET .. Crankcase exhaust elbow to flanged elbow
9	8144281	2	ELBOW .. Flanged
10	- - - -	A.R.	TUBING .. 2-7/8 O.D. - Approx. 70 in. req. - Avail. 20 ft.lg. 8145679
11	173829	8	BOLT .. Hex. head - Discharge elbow to flanged elbow
12	429608	8	NUT .. Hex.
13	103323	8	WASHER .. Lock
14	8081633	2	CLAMP .. Pipe
15	179839	4	BOLT .. Hex. head - Pipe clamp to bracket
16	429607	4	NUT .. Hex.
17	103321	4	WASHER .. Lock
18	8159520	1	BRACKET .. Clamp - L.H. of engine
19	8159521	1	BRACKET .. Clamp - R.H. of engine
20	181433	4	BOLT .. Hex. head
21	103323	4	WASHER .. Lock
22	8035716	4	HOSE .. Rubber
23	8048701	8	CLAMP .. Hose
24	- - - -	A.R.	TUBING .. 2-7/8 O.D. - Approx. 13 ft. req. - Avail. 20 ft. lg. 8145679

P. L. No. A508

COOLING SYSTEM
GP7 LOCOMOTIVE

Ref. No.	Part Number	No. Req.	Description
			Engine Water Outlet To Radiator Piping (Continued)
25	8108131	2	CLAMP .. Pipe
26	8144259	1	ELBOW .. Radiator inlet - L.H. front
27	8144260	1	ELBOW .. Radiator inlet - R.H. front
*+ 28	- - - -	1	RADIATOR ASSEMBLY .. L.H. front (2 section) - See Parts List No. 532
*+ 29	- - - -	1	RADIATOR ASSEMBLY .. R.H. front (2 section) - See Parts List No. 532
30	8081192	2	GASKET .. Inlet elbow to front radiator
31	173837	20	BOLT .. Hex. head
32	103320	20	WASHER .. Lock
			Front to Rear Radiator Piping
33	8024320	4	FLANGE .. Pipe to radiator header
34	8024321	4	GASKET .. Flange to radiator header
35	173827	24	BOLT .. Hex. head
36	103323	24	WASHER .. Lock
37	- - - -	A.R.	PIPE .. Flange to hose - 2-7/8 O.D. - Approx. 30 ft. req. - Avail. 20 ft. lg. - 8116749
38	8035716	4	HOSE .. Rubber
39	8048701	8	CLAMP .. Hose
40	8108241	10	CLAMP .. Pipe
*+ 41	- - - -	1	RADIATOR ASSEMBLY .. R.H. rear (3 section) - See Parts List No. 532
*+ 42	- - - -	1	RADIATOR ASSEMBLY .. L.H. rear (3 section) - See Parts List No. 532
			Radiator Discharge Piping
43	8148086	1	PIPE ASSEMBLY .. Radiator discharge - L.H.
44	8148087	1	PIPE ASSEMBLY .. Radiator discharge - R.H.
45	8024321	2	GASKET .. Discharge pipe to header
46	173827	12	BOLT .. Hex. head
47	103323	12	WASHER .. Lock
48	8035716	2	HOSE .. Rubber
49	8048701	4	CLAMP .. Hose
50	- - - -	A.R.	PIPE .. 2-1/2 I.P.S. - Approx. 10 ft. req. - Avail 20 ft. lg. 8116749
51	8048000	2	ELBOW .. 2-1/2 P.T.
52	219567	2	NIPPLE .. Elbow to oil cooler
*+ 53	- - - -	1	RACK .. Equipment - See Parts List No. 1000
			Water Filler Piping
54	8041901	1	CAP .. Vent
55	8148160	1	FLASHING .. Vent pipe
56	- - - -	A.R.	PIPE .. 2-1/2 I.P.S. - Approx. 50 in. req. - Avail. 20 ft. lg. 8116749
57	141621	2	ELBOW .. Street
58	191034	2	ELBOW
59	8060940	1	NIPPLE .. Close
60	8148124	1	PIPE .. Elbow to rubber hose

P. L. No. A508

COOLING SYSTEM
GP7 LOCOMOTIVE

Ref. No.	Part Number	No. Req.	Description
			Water Filler Piping (Continued)
61	179456	1	ELBOW .. Water tank - Accessory rack
62	8035716	1	HOSE .. Rubber
63	8048701	2	CLAMP .. Hose
64	8108131	1	CLAMP .. Pipe
65	8148314	2	PLATE .. Cut out cover
66	106324	8	BOLT .. Hex. hd. - Cover plate
67	103320	8	WASHER .. Lock
68	8149145	2	NIPPLE .. Short - 3/4 P.T.
69	8044155	2	UNION .. 3/4 P.T.
70	- - - -	A.R.	PIPE .. 3/4 I.P.S. - Approx. 20 ft. req. - Avail. 20 ft. lg. 8116945
71	8035705	2	HOSE .. Rubber
72	8048696	4	CLAMP .. Rubber hose
73	8108116	5	CLAMP ASSEMBLY .. Pipe
74	- - - -	A.R.	PIPE .. 3/4 I.P.S. - Approx. 10 ft. req. - Avail. 20 ft. lg. 8116945
75	144129	2	ELBOW .. 3 P.T. - 45 ^{o}
76	8149145	2	NIPPLE .. Short - 3/4 P.T.
77	8094652	2	CONNECTOR .. Hose
78	8108126	4	CLAMP ASSEMBLY .. Pipe
			Radiator Vent Piping
79	8040313	1	CONNECTOR .. 3/8 tube x 3/8 P.T.
80	118539	6	NUT .. 3/8 tube
81	- - - -	A.R.	TUBING .. 3/8 O.D. - Approx. 20 ft. req. - Avail. 50 ft. lg. 8122233
82	118807	1	TEE .. 3/8 tube
83	118750	2	CONNECTOR .. 3/8 x 1/4 P.T.
84	8108202	5	CLAMP ASSEMBLY .. Vent piping
			Engine Drain Piping
85	8125491	1	PIPE ASSEMBLY .. Engine drain
86	- - - -	A.R.	TUBING .. 1-1/4 I.P.S. - 1-1/2 in. req. - Avail. 12 ft. lg. 8116861
87	8061521	1	UNION .. 1-1/4 sol.
88	8108646	3	CLAMP ASSEMBLY .. Engine drain
89	8029469	2	GASKET .. Flange
90	103321	8	WASHER .. Lock
91	106330	8	SCREW .. Cap - Hex. hd.
92	8064234	1	VALVE .. Drain
93	8153258	1	NIPPLE .. 1-1/4 P.T. x 1-1/4 sol.
94	8060976	1	NIPPLE .. Short - 1-1/4 P.T.
95	218296	1	TEE .. 1-1/4 x 1-1/4 x 1/2 P.T.
96	8092145	1	NIPPLE .. Short - 1-1/4 P.T. x sol.
			Equipment Rack Mounting Piping
*+ 97	8143546	1	PIPE .. Lube oil filter to elbow
+ 98	8126649	6	GASKET .. Water pump flexible hose
*+ 99	8090082	1	ELBOW .. Scavenging pump
*+100	8029467	1	GASKET .. Elbow to pump
+101	8058494	2	HOSE .. 3 in. flexible - Water pump to elbow
*+102	8080947	1	GASKET .. Inlet elbow to strainer

P. L. No. A508

COOLING SYSTEM
GP7 LOCOMOTIVE

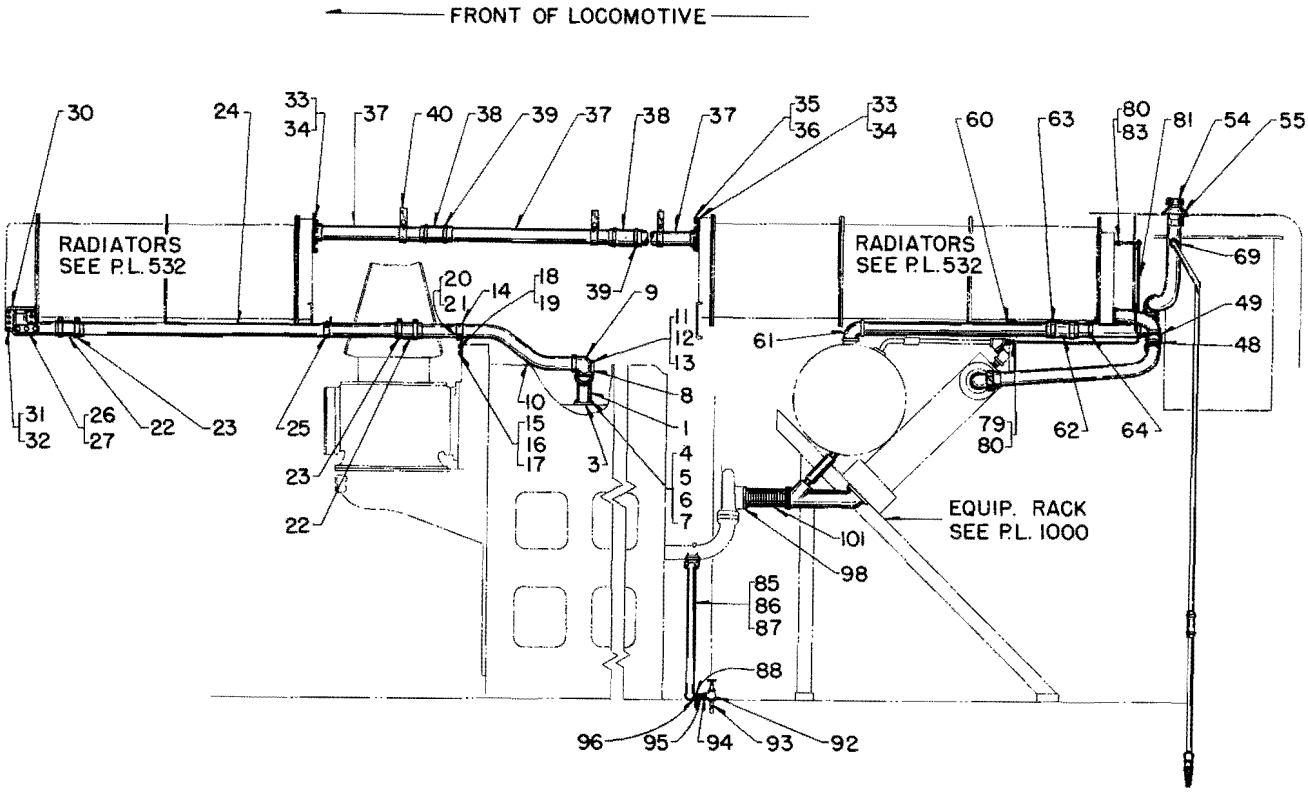

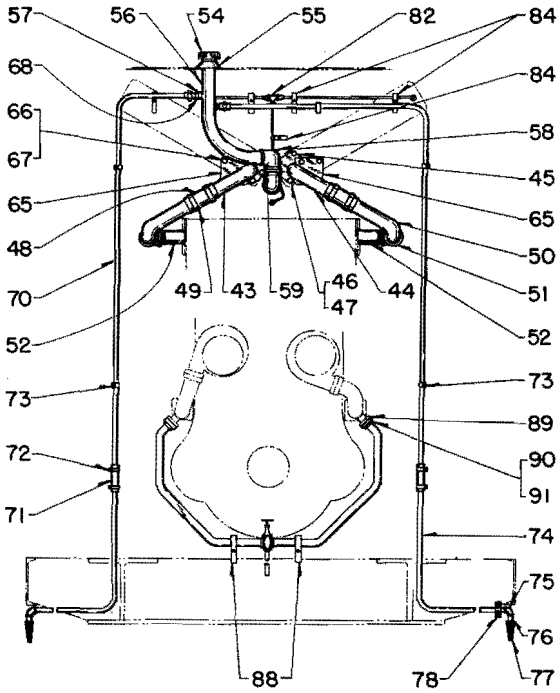

PLATE A508-2

Parts List No. B509

COOLING SYSTEM

GP7, GP9 LOCOMOTIVES

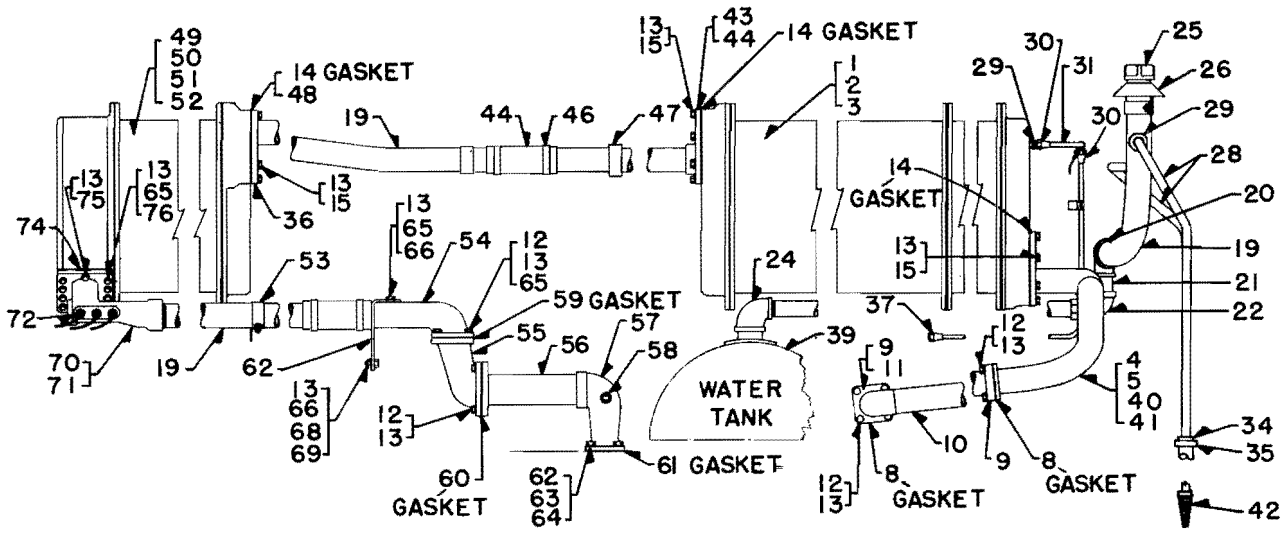

COOLING SYSTEM PIPING

PLATE B509-1

Ref. No.	Part Number	No. Req.	Description

NOTE: GP7 locomotives built after October, 1952 with re-designed cooling system piping arrangement, eliminating rubber hose connections in the lube oil cooler lines, and off-setting the water discharge line at rear of engine. For GP7 locomotives built prior to October, 1952 with rubber hose connections in the lube oil cooler lines and water discharge line not off-set, see P.L. 508.

	A	-	GP7 PIPING ARRANGEMENT - See note
	-	B	GP9 PIPING ARRANGEMENT

REAR END - THREE CORE RADIATOR GROUP

1	8209590	-	1	RADIATOR ASY. .. Cooling - 6 inch - Fireman's side - See P.L. 532
2	8209591	-	1	RADIATOR ASY. .. Cooling - 6 inch - Engineer's side - See P.L. 532
3	8148147	2	-	RADIATOR ASY. .. Cooling - 4 inch - Left and right side - See P.L. 532
4	8189349	-	1	PIPE ASY. .. Radiator water discharge to oil cooler - Left side
5	8193005	1	-	PIPE ASY. .. Radiator water discharge to oil cooler - Left side
* 6	8189350	-	1	PIPE ASY. .. Radiator water discharge to oil cooler - Right side
* 7	8193006	1	-	PIPE ASY. .. Radiator water discharge to oil cooler - Right side
8	8031624	4	4	GASKET .. Flange
9	8164931	4	4	FLANGE .. Radiator water discharge pipe
10	8189389	2	2	PIPE ASY. .. Radiator water discharge pipe to oil cooler
11	8189388	2	2	FLANGE ASY. .. Oil cooler
12	179887	24	24	BOLT .. Flange - 1/2-13 x 2 hex. hd.
13	103323	89	89	WASHER .. Lock - 1/2
14	177371	-	6	GASKET .. Radiator flange
15	179885	36	36	BOLT .. Radiator flange - 1/2-13 x 1-1/2 hex. hd.

8208216 8198048 8208796 8159409 8159509 8158856

P. L. No. B509

COOLING SYSTEM

Ref. No.	Part Number	No. Req.		Description
		A	-	GP7 PIPING ARRANGEMENT (continued)
		-	B	GP9 PIPING ARRANGEMENT (continued)
				REAR END - THREE CORE RADIATOR GROUP (continued)
*16	8148315	2	2	PLATE .. Cover
*17	179814	8	8	BOLT .. Cover plate - 5/16-18 x 5/8 hex. hd.
*18	103320	8	8	WASHER .. Lock - 5/16
19	- - - -	A.R.	A.R.	PIPE .. Steel - 2-1/2 inch - Available 20 ft. - 8116749
20	179761	1	1	ELBOW .. Reducing pipe - 2-1/2 x 1-1/2 P.T.
21	219377	1	1	NIPPLE .. Pipe - 1-1/2 P.T. x 3 in. lg.
22	8062563	1	1	ELBOW .. Female union - 1-1/2 P.T.
23	- - - -	A.R.	A.R.	PIPE .. Steel - 1-1/2 - Available 20 ft. - 8116747
24	179761	1	1	ELBOW .. Reducing pipe - Water tank - 2-1/2 P.T. x 1-1/2 P.T.
25	8041901	1	1	CAP .. Vent
26	8148160	1	1	FLASHING .. Vent pipe
27	8044161	1	1	UNION .. Male pipe - 3/4 P.T.
28	- - - -	A.R.	A.R.	PIPE .. Steel - 3/4 - Available 20 ft. - 8116936
29	8027428	-	2	CONNECTOR .. Flared tube - 1/2 tube x 1/2 P.T.
30	118541	2	4	NUT .. Flared tube - 1/2
31	- - - -	A.R.	A.R.	TUBING .. Copper - 1/2 O.D. - Available 50 ft. - 8116730
*32	118539	4	-	NUT .. Flared tube - 3/8
33	- - - -	A.R.	-	TUBING .. Copper - 3/8 O.D. - Available 25 ft. - 8116856
34	8035705	2	2	HOSE .. Rubber - Water filler pipe - 1 I.D. x 6 in. lg.
35	8048696	4	4	CLAMP .. Hose
*36	8108116	4	4	CLAMP ASY. .. Water filler pipe to carbody
37	118809	-	1	TEE .. Flared tube - 1/2 tube
*38	8040353	1	-	TEE .. Flared tube - 3/8 tube x 3/8 tube x 1/2 tube
39	8154957	1	1	RACK ASY. .. Equipment - See P.L. 1000
40	8105873	A.R.	A.R.	TAPE .. Insulating - 3/16 x 1-9/16 x 50 ft. lg.
41	8157344	-	14	CLAMP .. Open end
42	8094652	2	2	CONNECTOR .. Hose
				CAB END TO REAR RADIATOR PIPING
43	8177369	-	4	FLANGE .. Radiator
44	8024320	4	-	FLANGE .. Radiator
45	8189925	4	4	HOSE .. Rubber - 2-7/8 I.D. x 8 in. lg.
46	8048701	8	8	CLAMP .. Hose
47	8108241	10	10	CLAMP ASY. .. Pipe
48	8024321	4	-	GASKET .. Radiator flange
				CAB END - TWO CORE RADIATOR GROUP
49	8189351	-	1	RADIATOR ASY. .. Cooling - 6 inch - Fireman's side - See P.L. 532
50	8148145	1	-	RADIATOR ASY. .. Cooling - 4 inch - Fireman's side - See P.L. 532
51	8189352	-	1	RADIATOR ASY. .. Cooling - 6 inch - Engineer's side - See P.L. 532
52	8148146	1	-	RADIATOR ASY. .. Cooling - 4 inch - Engineer's side - See P.L. 532
53	8108131	2	2	CLAMP ASY. .. Pipe
54	8192856	1	1	Y FITTING .. Discharge
55	8192855	1	1	ELBOW .. Discharge
56	8135201	1	1	PIPE .. Discharge
57	8135183	1	1	ELBOW .. Discharge

P. L. No. B509

COOLING SYSTEM

Ref. No.	Part Number	No. Req.		Description
		A	-	GP7 PIPING ARRANGEMENT (continued)
		-	B	GP9 PIPING ARRANGEMENT (continued)
				CAB END - TWO CORE RADIATOR GROUP (continued)
58	103880	1	1	PLUG .. Pipe - 1/2 P.T.
59	8193260	1	1	GASKET .. Y fitting to discharge elbow
60	8146490	1	1	GASKET .. Discharge elbow to discharge pipe
61	8070513	1	1	GASKET .. Discharge elbow to crankcase
62	271583	4	4	BOLT .. Discharge elbow to crankcase - 5/8-18 x 1-1/2 hex. hd.
63	8133334	4	4	WASHER .. Lock - 5/8
64	106267	4	4	WASHER .. Plain - 5/8
65	120396	8	8	WASHER .. Plain - 1/2 - Replaces 103343
66	179881	1	1	BOLT .. Discharge Y bracket - 1/2-13 x 1 hex. hd.
67	8192852	1	1	BRACKET .. Discharge Y
68	8176189	2	2	BOLT .. Stud head
69	103028	2	2	NUT .. Stud head bolt - 1/2-20 hex.
70	8206808	-	1	ELBOW .. Radiator inlet - L.S. - Temperature gauge and fan switch application
71	8192853	1	-	ELBOW .. Radiator inlet - L.S. - Temperature gauge and fan switch application
72	8206809	-	1	ELBOW .. Radiator inlet - R.S. - Hot engine and fan switch application
73	8192854	1	-	ELBOW .. Radiator inlet - R.S. - Hot engine and fan switch application
74	8081192	2	2	GASKET .. Inlet elbow to radiator
75	102637	-	10	NUT .. Radiator and water hose bolt - 1/2-13 hex.
76	179889	28	28	BOLT .. Radiator and water pump hose - 1/2-13 x 2 hex. hd.
77	128140	1	1	BUSHING .. Reducing - 3/4 P.T. x 1/2 P.T.
*78	8144368	4	4	SWITCH .. Shutter control temperature - See P.L. 5507
*79	8182265	1	1	SWITCH .. Engine high temperature alarm - See P.L. 5507
				ENGINE DRAIN PIPING
80	8125491	1	1	PIPE ASY. .. Engine drain
81	- - - -	A.R.	A.R.	TUBING .. Copper - 1-1/4 O.D. - Available per foot - 8044512
82	8061521	1	1	UNION .. Solder - 1-1/4
83	8029469	2	2	GASKET .. Engine drain pipe to engine
84	103321	8	8	WASHER .. Lock - 3/8
85	179841	8	8	BOLT .. Engine drain pipe to engine - 3/8-16 x 1-1/4 hex. hd.
86	8064234	1	1	VALVE .. Shut-off - 1-1/4 P.T.
87	218296	1	1	TEE .. Pipe - 1-1/4 x 1-1/4 x 1/2 P.T.
				EQUIPMENT RACK CONNECTION TO ENGINE
88	8058494	2	2	HOSE .. Flexible metal - 3 inch - Water pump to rack
89	8126649	4	4	GASKET .. Flexible hose
90	179883	8	8	BOLT .. Flexible hose to water pump - Pump side - 1/2-13 x 1-1/4 hex. hd.

Parts List No. C510

COOLING SYSTEM

COOLING SYSTEM PIPING

SD7, SD9 LOCOMOTIVES

PLATE A510-1

Ref. No.	Part Number	No. Req.		Description
		A	-	SD7 PIPING ARRANGEMENT
		-	B	SD9 PIPING ARRANGEMENT
1	8178697	1	-	RADIATOR ASY. .. Cooling - See P. L. 532
1A	8178698	1	-	RADIATOR ASY. .. Cooling - See P. L. 532
1B	8208769	-	1	RADIATOR ASY. .. Cooling - See P. L. 532
1C	8208770	-	1	RADIATOR ASY. .. Cooling - See P. L. 532
+ 2	8058624	1	1	PUMP .. Water - Left hand - See P. L. 420
+ 2A	8058625	1	1	PUMP .. Water - Right hand - See P. L. 420
2B	8188291	1	1	RACK .. Equipment - See P. L. 1002
3	8191802	1	1	HOSE .. Rubber - Engine to radiator - 4-1/2 O.D. x 8 in. lg. - Formerly 8035718
4	8187925	1	1	TEE .. Water inlet - Includes studs
5	8164931	2	2	FLANGE .. Tee to radiator
6	8031624	2	2	GASKET .. Flange
7	8116749	A.R.	A.R.	PIPE .. Steel - 3-1/2 in. - Avail. 20 ft.
8	8118709	2	-	FLANGE .. Radiator header
* 8A	8189356	-	2	FLANGE .. Radiator header
9	8024321	2	-	GASKET .. Flange to header
* 9A	8177371	-	2	GASKET .. Flange to header
10	179885	20	20	BOLT .. 1/2-13 x 1-1/2 hex. hd. - Replaces 173827
11	103323	37	37	WASHER .. Lock - 1/2
12	8178411	1	1	CONTROLLER .. Thermostat
13	179890	8	8	BOLT .. 1/2-13 x 2-1/4 hex. hd. - Replaces 173837
14	102637	12	12	NUT .. 1/2-13 hex. - Replaces 429608
* 15	103869	1	1	PLUG .. Pipe - Water inlet tee - 3/4 P.T.
16	8048702	2	2	CLAMP .. Hose
* 17	8098703	1	1	GASKET .. Thermostat mounting
* 18	102635	6	6	NUT .. 3/8-16 hex. - Replaces 429607
* 19	103321	6	6	WASHER .. Lock - 3/8
20	8183302	1	1	BRACKET .. Inlet tee
21	8183301	1	1	PAD .. Tee bracket to structure
22	179881	4	4	BOLT .. 1/2-13 x 1 hex. hd. - Replaces 173819
23	120396	22	4	WASHER .. Plain - 1/2 in.
24	8116750	A.R.	A.R.	PIPE .. Steel - 3 in. - Avail. 20 ft.
25	8058768	1	1	ELBOW .. 3 in. - 90° welding
26	8183658	2	2	RING .. Backing
27	8163599	2	1	PAD .. Flange
28	8144286	1	1	GASKET .. Flange pad
29	8182957	1	1	PAD .. Flange
30	8126649	1	1	GASKET .. Flange pad
31	179892	4	4	BOLT .. 1/2-13 x 2-3/4 hex. hd. - Replaces 173844
32	8116936	A.R.	A.R.	PIPE .. Steel - 3/4 - Avail. 20 ft.
* 33	126168	1	1	NIPPLE .. Pipe - 3/4 x 3 in. lg.
34	8060974	1	1	NIPPLE .. Short pipe - 3/4 P.T.
35	119099	3	3	ELBOW .. Pipe - 3/4 P.T.
36	8044169	3	3	ELBOW .. Pip - Union - 3/4 P.T.

P. L. No. C510

COOLING SYSTEM

Ref. No.	Part Number	No. Req.		Description
		A	-	SD7 PIPING ARRANGEMENT (continued)
		-	B	SD9 PIPING ARRANGEMENT (continued)
37	8108212	5	4	CLAMP ASY. .. Pipe
38	8044161	1	1	UNION .. Pipe - 3/4 M.P.T.
* 39	219341	1	1	NIPPLE .. Pipe - 3/4 P.T.
40	119099	1	1	ELBOW .. Pipe - 3/4 P.T.
41	8042907	1	1	ELBOW .. Pipe - 2-1/2 P.T.
42	8182869	1	1	FLANGE .. Pipe
43	8133922	2	2	RING .. Backing
44	8041901	1	1	CAP .. Water filler - 2-1/2 P.T.
45	8148160	1	1	FLASHING .. Filler piping
46	8182870	1	1	GASKET .. Flange to tank - Filler piping
47	8044512	A.R.	A.R.	TUBING .. Copper - 1-1/4 in. - Sold per foot
48	8045932	1	1	ELBOW .. Pipe-union - 1-1/4 solder
49	8183425	1	1	BRACKET ASY. .. Piping to cab heater
50	8081714	1	1	CLAMP .. Pipe
51	179839	2	2	BOLT .. 3/8-16 x 1 hex. hd. - Replaces 100134
52	8178829	1	1	VALVE .. Globe - 1-1/4 P.T.
53	8061521	1	1	UNION .. Female sol. - 1-1/4
54	8105873	A.R.	A.R.	TAPE .. Insulating - 3/16 x 1-9/16 - Avail. 50 ft.
55	8157781	6	6	CLAMP .. Open end
56	8108218	1	1	CLAMP ASY. .. Pipe
57	8176189	2	2	BOLT .. Stud head - 1/2-20
58	6101229	2	2	WASHER .. Plain - 1/2
59	103028	2	2	NUT .. 1/2-20 hex. - Replaces 451406
60	8108242	1	1	CLAMP ASY. .. Filler pipe
* 61	8040400	1	1	TEE .. Tube - 1/2 P.T.
* 61A	8108110	-	3	CLAMP ASY. .. Pipe
62	8062396	2	2	ELBOW .. 1-1/4 - 90°
63	8062292	2	2	TEE .. Pipe - 1-1/4 x 1/2 x 1-1/4 sol.
64	8064335	2	2	VALVE .. Globe - 1/2 solder
65	8116858	A.R.	A.R.	TUBING .. Copper - 1/2 O.D. - Avail. 20 ft.
66	8097045	1	1	COUPLING .. Pipe - 3 P.T.
67	8113301	A.R.	A.R.	TUBING .. Copper - 1 in. O.D. - Avail. 20 ft.
68	8108128	2	2	CLAMP ASY. .. Pipe
69	8108127	1	1	CLAMP ASY. .. Pipe
70	8116856	A.R.	A.R.	TUBING .. Copper - 3/8 O.D. - Avail. 25 ft.
71	8120711	1	1	COUPLING .. Tube - 3/8
* 72	8157783	5	-	CLAMP .. Open end
* 72A	8157781	-	10	CLAMP .. Open end
73	8091565	1	1	COUPLING .. Pipe - 1-1/4 sol.
74	118539	1	1	NUT .. Tube - 3/8 P.T.
75	8041828	1	1	VALVE .. Globe - 1/2 P.T.
* 76	8158824	1	1	STRAINER
* 77	8061468	3	3	NIPPLE .. Pipe - 1/2 P.T.
78	8049886	1	1	ELBOW .. Pipe - 1/2 P.T.
79	8087336	1	1	NIPPLE .. Pipe - 1/2 P.T.
80	8058574	1	1	CROSS .. Pipe - 1/2 P.T.
81	103868	2	2	PLUG .. Pipe - 1/2 P.T.
82	8049248	1	1	TEE .. Pipe - 1/2 P.T.
83	8014812	2	2	VENTURI .. Pipe
84	8041830	1	1	VALVE .. Check - 1/2 P.T.
85	8027428	1	1	CONNECTOR .. Tube - 1/2 P.T. x 1/2 tube
86	8037261	1	1	CONNECTOR .. Tube - 1/2 P.T. x 3/8 tube
* 87	8058519	1	1	COUPLING .. Tube - 1/2 P.T.

P. L. No. C510

COOLING SYSTEM

Ref. No.	Part Number	No. Req.		Description
		A	-	SD7 PIPING ARRANGEMENT (continued)
		-	B	SD9 PIPING ARRANGEMENT (continued)
88	8116730	A.R.	A.R.	TUBING .. Copper - 1/2 - O.D. - Avail. 50 ft.
89	118541	2	2	NUT .. Tube - 1/2 P.T.
90	8108126	4	4	CLAMP ASY. .. Filler pipe
91	446816	1	1	NIPPLE .. Pipe - 3/4 P.T. x 9-1/2 lg.
92	8094652	2	2	CONNECTION .. Hose
93	8116936	A.R.	A.R.	PIPE .. Steel - 3/4 - Avail. 20 ft.
* 94	8108212	1	1	CLAMP ASY. .. Pipe - Replaces 8108210
95	114612	1	1	NIPPLE .. Pipe - 1/2 P.T. x 3-1/2 in. lg.
* 96	8157782	14	14	CLAMP .. Open end pipe
* 97	8077101	A.R.	A.R.	TAPE .. Friction - Approx. 87-1/2 ft. per roll
98	8042825	1	1	ELBOW .. Pipe - 1/2 P.T.
99	8050094	1	1	COUPLING .. Pipe - Reducing - 3/4 P.T. x 1/2 P.T.
100	103869	1	1	PLUG .. Pipe - 1/2 P.T.
101	8108125	1	1	CLAMP ASY. .. Pipe
102	8116751	A.R.	A.R.	PIPE .. Steel - 1/2 O.D. - Avail. 20 ft.
103	118814	1	1	ELBOW .. Union - 1/2 tube
104	8125491	1	1	PIPE ASY. .. Water pump and engine drain
105	8135183	1	1	ELBOW .. Water discharge
106	8135201	1	1	PIPE .. Water discharge
107	8070513	2	2	GASKET .. Discharge elbow
108	451967	8	-	NUT .. Hex. - 5/8-11
*108A	271583	-	8	BOLT .. Water discharge elbow - 5/8-18 x 1-1/2 hex. hd.
109	114609	8	-	WASHER .. Lock - 5/8
*109A	8133334	-	8	WASHER .. Lock - 5/8
110	8137334	8	-	WASHER .. Flat - 11/16
*110A	106267	-	4	WASHER .. Flat - 5/8
111	8029469	2	2	GASKET .. Drain line to pump
112	103321	8	8	WASHER .. Lock - 3/8
113	179838	8	8	BOLT .. 3/8-16 x 7/8 hex. hd.
114	103323	24	-	WASHER .. Lock - 1/2
115	8183250	1	1	FLANGE .. Pipe
116	8164709	1	1	ELBOW .. Pipe - Water discharge
117	8146490	1	1	GASKET .. Discharge elbow
118	179885	14	10	BOLT .. 1/2-13 x 1-1/2 hex. hd. - Replaces 173827
119	8179623	1	1	BRACKET .. Discharge pipe
120	8179624	1	1	BRACKET .. Discharge pipe
121	8058494	2	2	HOSE .. Flexible - Tank to pump
122	8126649	4	4	GASKET .. Flexible hose
123	179883	8	8	BOLT .. 1/2-13 x 1-1/4 hex. hd. - Replaces 173825
124	179889	8	8	BOLT .. 1/2-13 x 2 hex. hd. - Replaces 173836
125	102637	12	12	NUT .. Hex. - 1/2-13
126	8182317	1	1	PIPE .. Tank to cab heater
127	8044170	1	1	ELBOW .. Pipe - Union - 1-1/4 P.T.
128	8045913	1	1	UNION .. Pipe - 1-1/4 P.T. x Sol.
129	8108218	1	1	CLAMP ASY. .. Engine drainline
*130	8116938	A.R.	A.R.	PIPE .. Steel - 1-1/4 in. - Avail. 20 ft.
131	8092145	1	1	NIPPLE .. Pipe - 1-1/4 P.T. x sol.
132	218296	1	1	TEE .. Pipe - 1-1/4 x 1-1/4 x 1/2 P.T.
*133	219360	2	2	NIPPLE .. Pipe - 1-1/4 x 3-1/2

P. L. No. C510

COOLING SYSTEM

Ref. No.	Part Number	No. Req.		Description
		A	-	SD7 PIPING ARRANGEMENT (continued)
		-	B	SD9 PIPING ARRANGEMENT (continued)
134	8064723	1	1	VALVE .. Globe - 1-1/4 P.T.
135	137971	1	1	ELBOW .. 1-1/4 x 1-1/4 P.T.
*136	8060973	2	2	NIPPLE .. Pipe - 1/2 P.T.
*137	8042825	1	1	ELBOW .. Pipe - 1/2 P.T.
*138	8041830	1	1	VALVE .. Check - 1/2 P.T.
*139	8108106	2	2	CLAMP ASY. .. Radiator return piping
140	8126649	1	1	GASKET .. Water outlet tee to return piping
141	179890	4	4	BOLT .. 1/2-13 x 2-1/4 hex. hd. - Replaces 173827
142	8177678	1	1	TEE .. Water outlet - Flanged
143	8178849	2	-	PIPE .. Water return - 2-1/2 I.P.S.
144	186295	2	2	BOLT .. 1/2-13 x 5-1/2 hex. hd. - Replaces 174785
145	8177664	2	-	ELBOW .. Flanged outlet
146	8024321	2	-	GASKET .. Radiator header flange
147	191019	1	1	ELBOW .. Pipe - No. 3
148	8164162	1	1	FLANGE .. Return pipe to water outlet tee
*149	8208412	-	2	PIPE .. Water return - 2-1/2 I.P.S.
*150	8177371	-	2	GASKET .. Radiator header flange
*151	8206579	-	2	ELBOW .. Water outlet - Flanged
*152	- - - -	-	-	CAB HEATER AND DEFROSTER PIPING .. See Plate 510-2

P. L. No. C510

COOLING SYSTEM

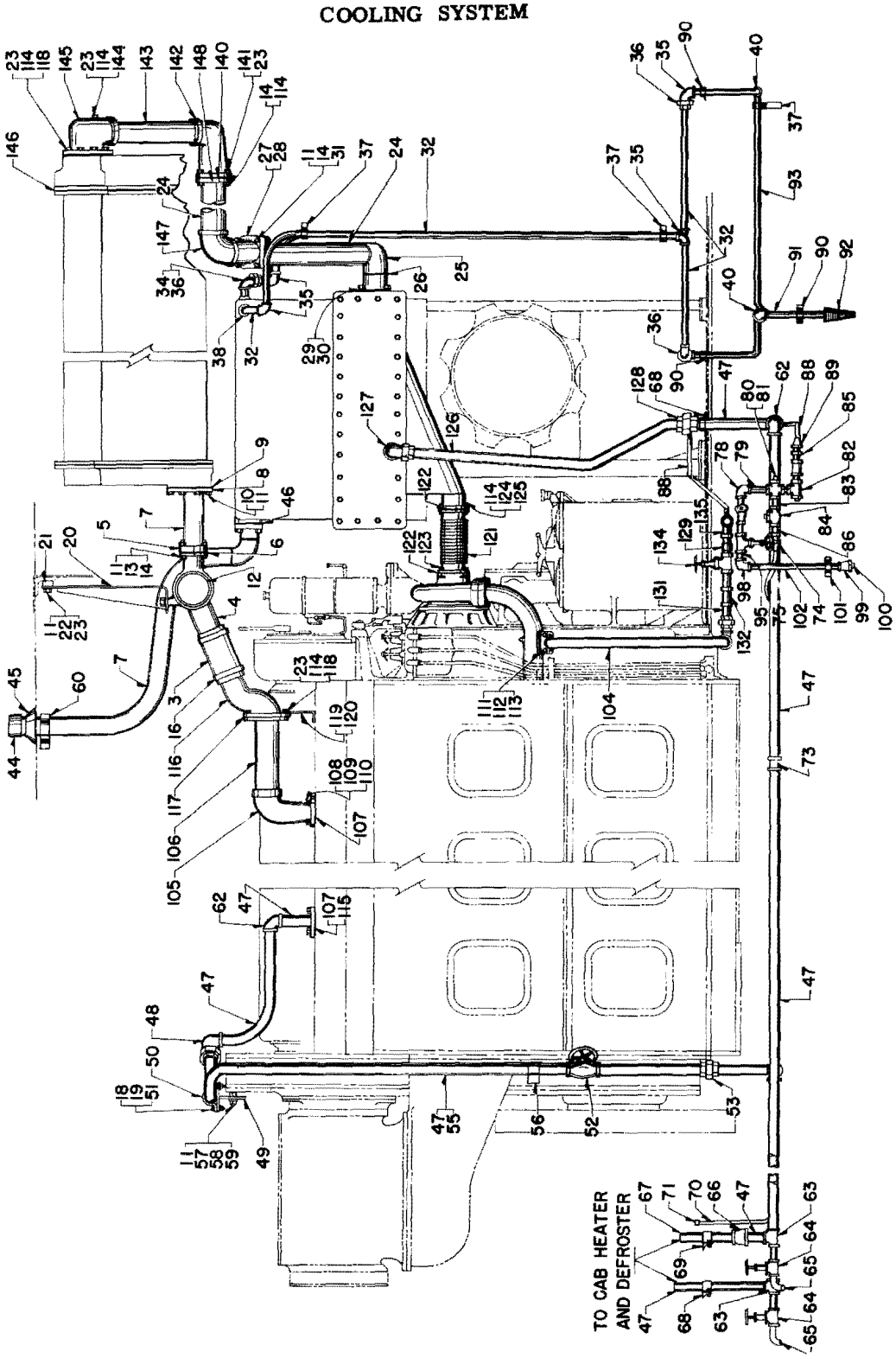

COOLING SYSTEM PIPING
SD7, SD9 LOCOMOTIVES

PLATE A510-1

P. L. No. C510

COOLING SYSTEM

CAB HEATER AND DEFROSTER PIPING

SD7, SD9 LOCOMOTIVES

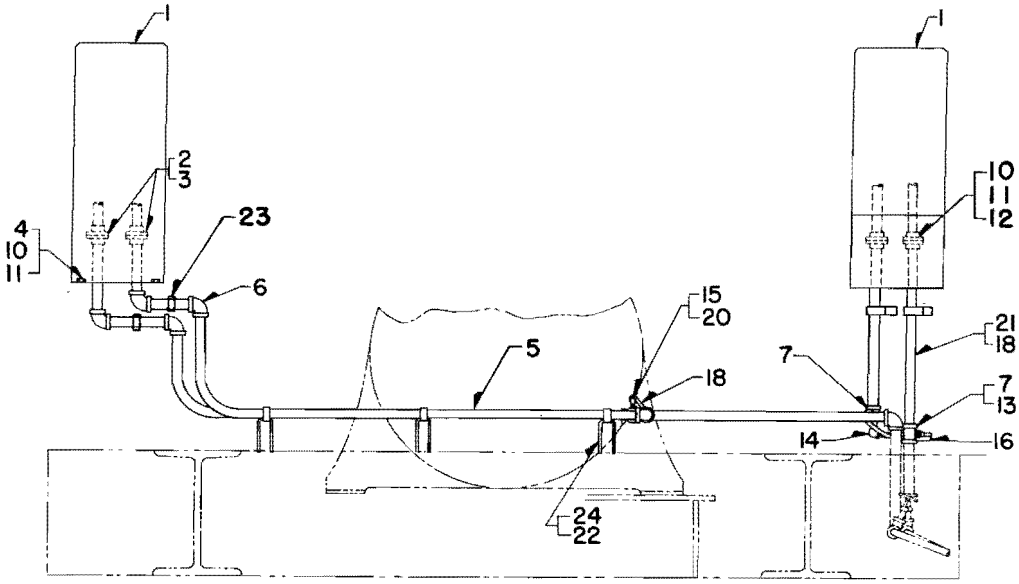

PLATE A510-2

Ref. No.	Part Number	No. Req.	Description
1	8182564	2	HEATER .. Cab - Includes defroster - See P. L. 4109
2	8182654	4	FLANGE .. Cab heater piping to heater
3	8140483	4	GASKET .. Flange
4	179837	12	BOLT .. 3/8-16 x 3/4 hex. hd. - Replaces 100133
5	8113301	A.R.	TUBING .. Copper - 1 in. - Avail. 20 ft.
6	8062395	6	ELBOW .. 90° pipe - 1 I.P.S.
7	8062635	2	TEE .. 1 in. sol. x 1 in. sol. x 1/2 P.T.
* 8	8095267	1	TEE .. Pipe - Reducing - 1 in. sol. x 1 in. sol. x 1/2 P.T.
* 9	8064057	1	ELBOW .. Pipe - Reducing - 1-1/4 P.T. x 1 P.T.
10	103321	20	WASHER .. Lock - 3/8
11	103341	20	WASHER .. Plain - 3/8
12	179841	8	BOLT .. 3/8-16 x 1-1/4 hex. hd. - Replaces 100135
13	8027428	1	CONNECTOR .. Tube - 1/2 M.P.T.
14	8027437	1	ELBOW .. Tube - 1/2 P.T.
15	8040339	1	ELBOW .. Tube - 1/2 P.T.
16	8116730	A.R.	TUBING .. Copper - 1/2 O.D. - Avail. 50 ft.
* 17	118541	2	NUT .. Flared tube - 1/2 P.T.
18	8117956	A.R.	TUBING .. Copper - 3/8 O.D. - Avail. 25 ft.
* 19	8105873	A.R.	TAPE .. Insulating - 3/16 x 1-9/16 - Avail. 50 ft.
20	118539	1	NUT .. Flared tube - 3/8 P.T.
21	8157781	15	CLAMP .. Tube - Open end
22	8157345	3	CLAMP .. Tube - Open end
23	8108216	4	CLAMP ASY. .. Pipe
* 23A	8108217	4	CLAMP ASY. .. Pipe
24	8183680	5	SUPPORT .. Pipe
* 25	8184844	4	SEAL .. Rubber
* 26	8184845	4	SEAL .. Rubber

8187629

Parts List No. C520

AIR CYLINDER ASSEMBLY

SHUTTER AND BY-PASS VALVE CONTROL AIR CYLINDERS

ALL LOCOMOTIVES

PLATE B520-1

Ref No.	Part Number	Number Required					Description
CYLINDER ASSEMBLY . . Air							
1	8080170	A	-	-	-	-	CYLINDER ASSEMBLY .. Air - Shutter operating - 2 inch bore - SW1, NW2, TR2, TR3, TR4, F2, F3, F7, FP7, GP7, GP9, E8, E9, BL, SD7, SD9, F9, FP9
2	8151368	-	B	-	-	-	CYLINDER ASSEMBLY .. Air - Shutter operating - 2-1/2 inch bore - Hanna Co. - Replaces 8151449 - SW7, SW8, SW9, TR5, SW600, SW900, SW1200
3	8151449	-	-	C	-	-	CYLINDER ASSEMBLY .. Air - Shutter operating - 2-1/2 inch bore - S-P Mtg. Co. SW7, SW8, SW9, TR5, TR6, SW600, SW900, SW1200
4	8058112	-	-	-	D	-	CYLINDER ASSEMBLY .. Air - Shutter operating - 2 inch bore - E7
5	8180597	-	-	-	-	E	CYLINDER ASSEMBLY .. Air - By - Pass valve control - 2 inch bore - Replaces 8155034 - SW7, SW8, SW9, TR5, TR6, NW2, SW600, SW900, SW1200
HEAD . . Back							
6	8110175	1	-	-	1	1	HEAD .. Back
7	8151501	-	1	-	-	-	HEAD .. Back
8	8151511	-	-	1	-	-	HEAD .. Back
9	8110192	1	1	-	-	-	BRACKET .. Mounting
10	8151510	-	-	1	-	-	BRACKET .. Mounting
11	8110193	1	1	1	1	1	PIN .. Clevis - 1/2 x 1-7/8 in. lg.
12	137185	2	2	2	-	2	PIN .. Cotter - 1/8 x 1 in. lg.
HEAD . . Front							
13	8110182	1	-	-	-	-	HEAD .. Front
14	8151507	-	1	-	-	-	HEAD .. Front
15	8151519	-	-	1	-	-	HEAD .. Front
16	8099099	-	-	-	1	-	HEAD .. Front
17	8188934	-	-	-	-	1	HEAD .. Front
18	8099101	-	-	-	2	-	FLANGE .. Front end
19	8110191	1	1	-	-	1	PLUG .. Screen - 1/2 in. dia. - No. 40 mesh screen
20	8151520	-	-	1	-	-	RETAINER .. Screen
21	8151521	-	-	1	-	-	SCREEN .. Vent
22	8099100	-	-	-	1	-	SCREEN .. Vent
23	8099098	-	-	-	2	-	BUSHING .. Oilite
ROD . . Tie							
24	8110185	4	4	-	-	-	ROD .. Tie
25	8151523	-	-	4	-	-	ROD .. Tie
26	8099104	-	-	-	4	-	ROD .. Tie
27	8188935	-	-	-	-	4	ROD .. Tie
28	102634	8	8	-	8	8	NUT .. Tie rod - 5/16-18 hex.
29	103025	-	-	8	-	-	NUT .. Tie rod - 5/16-24 hex. - Replaces 174806
GASKET . . Back Head							
30	8110179	1	-	-	1	1	GASKET .. Back head
31	8151505	-	1	-	-	-	GASKET .. Back head
32	8151709	-	-	1	-	-	GASKET .. Back head

P. L. No. C520

AIR CYLINDER ASSEMBLY

Ref. No.	Part Number	Number Required A	B	C	D	E	Description
							CYLINDER ASSEMBLY .. Air (Continued)
CYLINDER . . Air							
33	8110178	1	-	-	-	-	CYLINDER .. Air
34	8151504	-	1	-	-	-	CYLINDER .. Air
35	8099102	-	-	-	1	-	CYLINDER .. Air
36	8184714	-	-	-	-	1	CYLINDER .. Air
PISTON . . Cylinder							
37	8110177	1	-	-	-	-	PISTON .. Cylinder
38	8151503	-	1	-	-	-	PISTON .. Culinder
39	8151514	-	-	1	-	-	PISTON .. Cylinder
40	8099105	-	-	-	1	-	PISTON .. Cylinder
*41	8188932	-	-	-	-	1	PISTON .. Cylinder
PACKING . . Piston, Piston Rod and Spring							
42	8110176	1	-	-	1	1	PACKING .. Piston
*43	8151502	-	1	-	-	-	PACKING .. Piston
44	8151512	-	-	1	-	-	PACKING .. Piston
45	8175001	1	1	-	-	-	RING .. "O" - Piston rod - Packing - Replaces 8198974
46	8110183	1	-	-	1	1	SPRING .. Packing
47	8151508	-	1	-	-	-	SPRING .. Packing
48	8151513	-	-	1	-	-	RING .. Expanding
*49	8198973	-	-	-	1	-	RING .. Packing
ROD . . Piston							
50	8110180	1	1	-	-	-	ROD .. Piston - 7/16-14
51	8151516	-	-	1	-	-	ROD .. Piston - 1/2-20
52	8099103	-	-	-	1	-	ROD .. Piston
53	8184715	-	-	-	-	1	ROD .. Piston
54	8110188	1	1	-	1	1	CLEVIS .. Piston rod
55	8151522	-	-	1	-	-	CLEVIS .. Piston rod
56	8110189	1	1	1	-	1	PIN .. Grove - 1/8-1-1/4 in. lg.
57	8110184	1	1	-	-	-	GUIDE .. Spring
58	8151518	-	-	1	-	-	GUIDE .. Spring
59	8188933	-	-	-	-	1	GUIDE .. Spring
60	8110181	1	-	-	1	1	FOLLOWER
*61	8151506	-	1	-	-	-	FOLLOWER
62	8151515	-	-	1	-	-	PILOT .. Spring
63	272711	1	1	-	-	1	NUT .. Piston rod - Self locking - 7/16-14 - Replaces 272683 and 102636
64	102637	-	-	-	1	-	NUT .. Piston rod - 1/2-13 hex.
65	102639	-	-	-	1	-	NUT .. Piston rod - 5/8-11 hex. - Replaces 173687 and 451411
66	103028	-	-	1	-	-	NUT .. Piston rod - 1/2-20 hex. - Replaces 174802 and 451406
67	137204	-	-	1	-	-	PIN .. Cotter - Piston rod nut - 1/8 x 1-1/2 in. lg.
SPRING . . Piston Operating							
68	8110187	1	1	-	-	-	SPRING .. Piston operating
69	8151517	-	-	1	-	-	SPRING .. Piston operating
70	8184716	-	-	-	-	1	SPRING .. Piston operating
71	8184717	-	-	-	-	1	SPRING .. Piston operating
72	8110192	-	-	-	-	1	BRACKET .. Mounting

P. L. No. C520

AIR CYLINDER ASSEMBLY

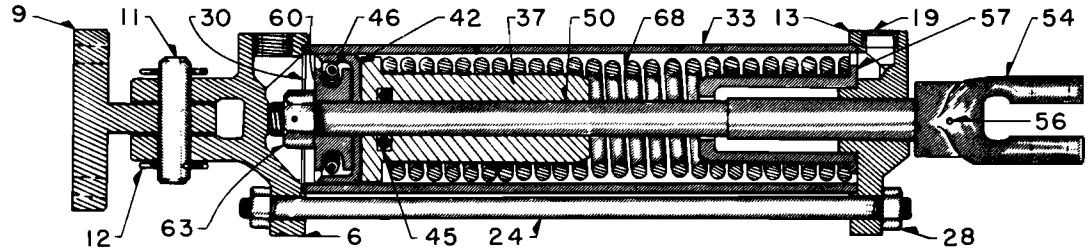

PART NO. 8080170
SW1, NW2, TR2, TR3, TR4, F2, F3, F7, FP7, GP7, GP9, E8, E9, BL, SD9 LOCOMOTIVES

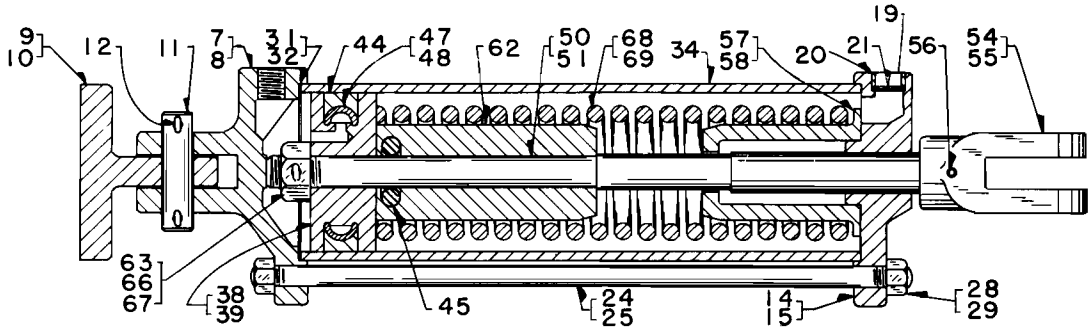

PART NO. 8151368 AND 8151449
SW7, SW8, SW9, TR5, TR6, SW600, SW900, SW1200 LOCOMOTIVES

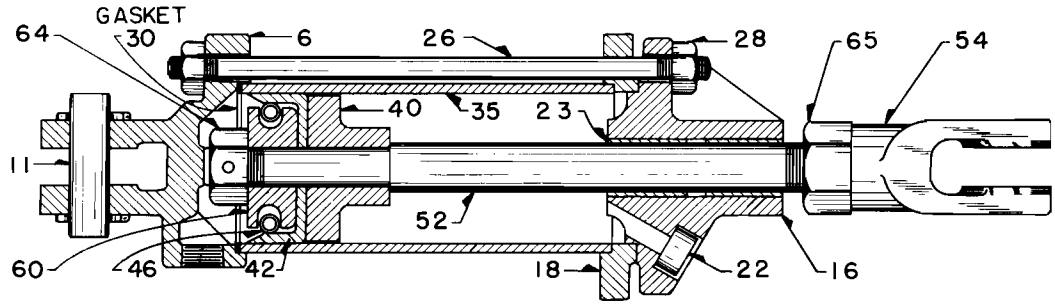

PART NO. 8058112
E7 LOCOMOTIVE

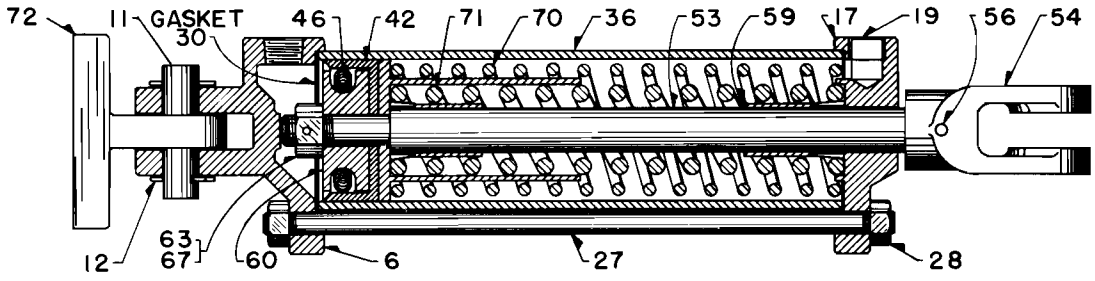

PART NO. 8155034 AND 8180597
NW2, SW7, SW8, SW9, TR5, TR6, SW600, SW900, SW1200 LOCOMOTIVES
SHUTTER AND BY-PASS VALVE CONTROL AIR CYLINDERS
ALL LOCOMOTIVES
PLATE B520-1

Parts List No. B521

AUTOMATIC SHUTTER AND MANUAL OPERATING MECHANISM

E3, E4, E5, E6, AND E7 LOCOMOTIVES
AUTOMATIC SHUTTER ARRANGEMENT
MODEL E7 LOCOMOTIVE

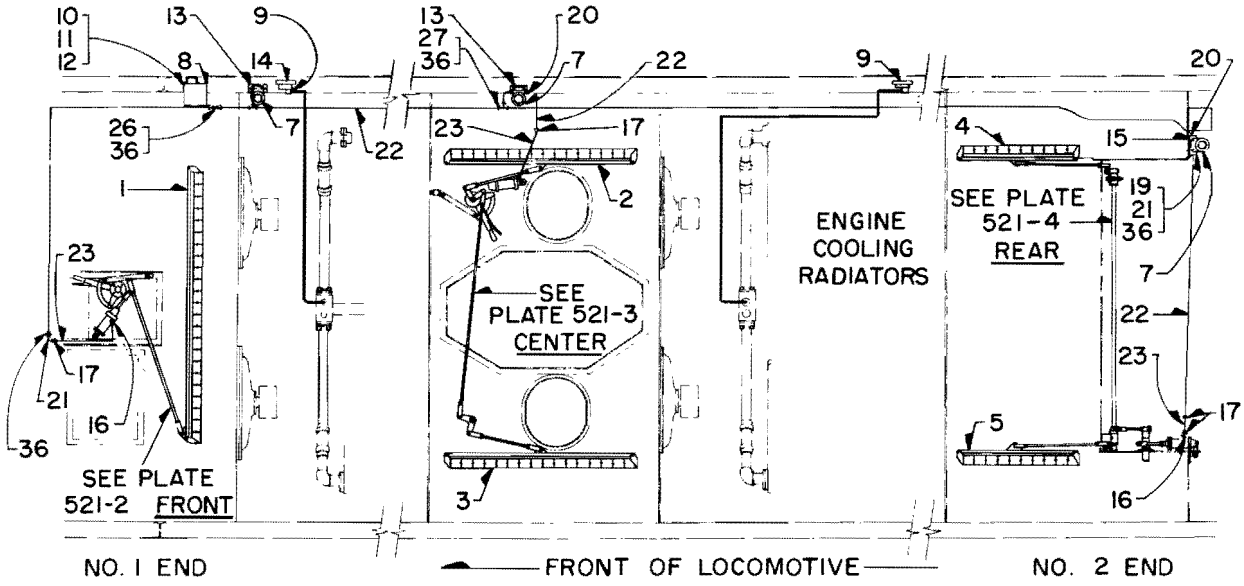

PLATE A521-1

Ref. No.	Part Number	No. Req.	Description
1	8127746	1	SHUTTER ASY. .. Front - See Plate 521-9
2	8127745	1	SHUTTER ASY. .. Center - Right side - See Plate 521-9
3	8127221	1	SHUTTER ASY. .. Center - Left side - See Plate 521-9
4	8127742	1	SHUTTER ASY. .. Rear - Right side - See Plate 521-9
5	8127741	1	SHUTTER ASY. .. Rear - Left side - See Plate 521-9
* 6	- - - -	1	SHUTTER OPERATING MECHANISM - See Plate 521-2, 3, and 4
7	8206389	3	VALVE .. Air magnet - Replaces 8003765 - See P. L. 4707
8	8064459	2	RELAY .. Shutter - See P. L. 5323
9	8094740	2	SWITCH .. Engine temperature control - See P. L. 5507
10	8004758	1	FUSE .. 6 ampere
11	8003863	1	BLOCK .. Fuse - Single pole
12	8005044	2	BOX .. Relay
13	8098959	2	BRACKET .. Air magnet valve
14	8098961	2	BRACKET .. Engine temperature control switch
15	8098962	1	BRACKET .. Shutter relay
16	8090632	3	ADAPTER .. Air cylinder to air line
17	8089109	6	CONNECTOR .. Hose - 1/4 M.P.T. x 5/16 I.D. hose
*18	8037261	1	CONNECTOR .. Flared tube - 3/8 tube x 1/2 M.P.T.
19	8040313	1	CONNECTOR .. Flared tube - 3/8 tube x 3/8 P.T.
20	8039169	6	ELBOW .. Flared tube - 3/8 tube x 3/8 M.P.T.
21	118576	2	ELBOW .. Flared tube - 3/8 tube x 1/4 F.P.T.

8099005

P. L. No. B521

AUTOMATIC SHUTTER AND MANUAL OPERATING MECHANISM

Ref. No.	Part Number	No. Req.	Description
22	8116856	A R	TUBING .. 3/8 O. D. copper - 25 ft. lg.
23	8166595	A R	TUBING .. 5/16 I. D. rubber - 25 ft. lg.
*24	8078817	1	COCK .. 1/4 P.T.
*25	118750	2	CONNECTOR .. Flared tube - 3/8 tube x 1/4 P.T.
26	118802	1	UNION .. 3/8 tube
27	118807	2	TEE .. 3/8 tube
*28	179841	6	BOLT .. 3/8-16 x 1-1/4 in. lg. hex. hd. - Replaces 100135
*29	113954	4	BOLT .. 1/4-20 x 3/8 in. lg. rd. hd.
*30	110500	2	SCREW .. 10-24 x 1/2 in. lg. rd. hd.
*31	178405	6	SCREW .. 1/4-20 x 3/8 in. lg. self-tapping rd. hd.
*32	103319	4	WASHER .. Lock - 1/4
*33	103321	6	WASHER .. Lock - 3/8
*34	106497	2	WASHER .. Lock - No. 10
*35	110633	2	NUT .. 10-24 hex.
36	118539	18	NUT .. Flared tube - 3/8
*37	102635	6	NUT .. 3/8-16 hex. - Replaces 174847

P. L. No. B521

AUTOMATIC SHUTTER AND MANUAL OPERATING MECHANISM

AUTOMATIC SHUTTER OPERATING MECHANISM
MODEL E7 LOCOMOTIVE

PLATE A521-2, 3, AND 4

Ref. No.	Part Number	No. Req.			Description
		1	-	-	FRONT SHUTTER OPERATING MECHANISM
		-	1	-	CENTER SHUTTER OPERATING MECHANISM
		-	-	1	REAR SHUTTER OPERATING MECHANISM
1	8058112	1	1	1	CYLINDER ASY. .. Shutter operating air - See P. L. 520
2	8058552	1	1	1	LEVER ASY. .. Shutter operating - See Plate 521-8
3	8015664	-	1	-	WASHER .. Bell crank
4	8015833	-	-	2	BLOCK .. Pillow
5	8018018	1	-	3	LEVER .. Connection
6	8018620	-	1	-	CRANK .. Bell - L.S.
7	8022111	1	1	1	PIN .. Clevis - Air cylinder to adjusting link
8	8022266	-	1	-	CRANK .. Bell - R.S.
9	8022267	-	1	-	ROD .. Shutter - Bell crank to shutter - L.S.
10	8022268	-	1	-	ROD .. Shutter - Bell crank to shutter - R.S.
11	8022269	-	1	-	ROD .. Bell crank connection
12	8022270	-	1	-	BRACKET .. Operating lever shaft - Top
13	8022375	-	-	2	ROD .. Shutter - Lever shaft to shutter
14	8022376	-	-	1	ROD .. Connecting - Operating lever to pillow block shaft
15	8022387	-	1	-	SHAFT .. Bell crank stub
16	8022390	1	2	-	GASKET .. Operating lever shaft bracket
17	8029274	-	1	-	BOLT .. Eye - 3/8 in.
18	8032634	-	1	-	COLLAR .. Lever shaft
19	8050575	-	-	1	LEVER .. Operating
20	8050576	-	-	3	KEY .. Pillow block shaft - 1/4 x 1/4 x 1 in. lg.
21	8054430	1	-	-	KEY .. Shutter lever shaft - 1/4 x 1/4 x 1-5/16 in. lg.
22	8055796	1	1	1	BOLT .. Swivel - See Plate 521-8
23	8058012	1	1	1	LINK .. Adjusting - Quadrant mounting
24	8058042	1	1	-	BRACKET .. Shutter operating lever
25	8058053	1	1	1	COLLAR .. Stop - Located between bracket and adjusting link
26	8058058	-	1	-	SHAFT .. Lever
27	8058074	-	-	1	BRACKET .. Shutter operating lever
28	8058075	-	-	1	SHAFT .. Shutter operating lever
29	8058076	-	-	1	COLLAR .. Shutter lever
30	8058077	-	-	1	SHAFT .. Lever
31	8058119	1	1	1	SPRING .. Tension - Shutter operating lever
32	8058121	1	-	1	LUG .. Anchor
33	8058122	1	-	-	ROD .. Shutter
34	8058137	1	-	-	SHAFT .. Shutter operating lever
35	8058554	1	1	1	QUADRANT .. Lever
*36	8112534	-	1	-	BRACKET .. Eyebolt
37	179837	2	2	2	BOLT .. Quadrant mtg. - 3/8-16 x 3/4 hex. hd. - Replaces 100133
38	179839	-	-	4	BOLT .. Support bracket - 3/8-16 x 1 hex. hd. - Replaces 100134
39	179841	6	9	6	BOLT .. Pillow block and quadrant - 3/8-16 x 1-1/4 hex. hd. - Repls. 100135
40	179847	1	-	3	BOLT .. Connection lever - 3/8-16 x 2 hex. hd. - Replaces 100138
41	102706	-	1	-	SCREW .. Set - Lever shaft collar
42	102872	-	1	-	SCREW .. Set - Bell crank - 1/4-20 x 3/4 sq. hd.
43	103321	6	11	12	WASHER .. Lock - 3/8
44	103323	-	1	4	WASHER .. Lock - 1/2
45	103326	-	1	-	WASHER .. Lock - 3/4

P. L. No. B521

AUTOMATIC SHUTTER AND MANUAL OPERATING MECHANISM

Ref. No.	Part Number	No. Req.			Description
		1	-	-	FRONT SHUTTER OPERATING MECHANISM (cont'd.)
		-	1	-	CENTER SHUTTER OPERATING MECHANISM (cont'd.)
		-	-	1	REAR SHUTTER OPERATING MECHANISM (cont'd.)
46	103385	1	1	1	PIN .. Cotter - 1/8 x 1 in. lg.
47	103598	1	1	1	PIN .. Taper - No. 3 x 2 in. lg.
48	104039	2	6	2	END .. Adjusting yoke
49	105526	-	1	2	FITTING .. Grease - 1/8 P.T.
50	106751	2	3	2	KEY .. Woodruff - 3/16 x 3/4
51	108630	2	6	2	PIN .. Cotter - 1/8 x 7/8 in. lg.
52	109419	-	-	4	JOINT .. Ball - 1/2 P.T.
53	114744	-	1	1	FITTING .. Grease - 1/8 P.T.
54	114787	2	6	2	PIN .. Yoke - 1/2
55	120340	1	-	-	FITTING .. Grease - 45° pin type
56	173685	-	1	-	NUT .. Bell crank stub shaft bolt - 1/2-13 hex.- Replaces 173685
57	220081	-	1	-	NUT .. Bell crank stub shaft bolt - 3/4-10 hex.- Replaces 173688
58	103028	2	6	10	NUT .. Shutter and connection rod - 1/2-20 hex.- Replaces 174802
59	102635	6	10	9	NUT .. Lever rod bolt - 3/8-16 hex.- Replaces 174847
60	114503	-	1	-	NUT .. Eye bolt - 3/8-16 hex.- Replaces 177577

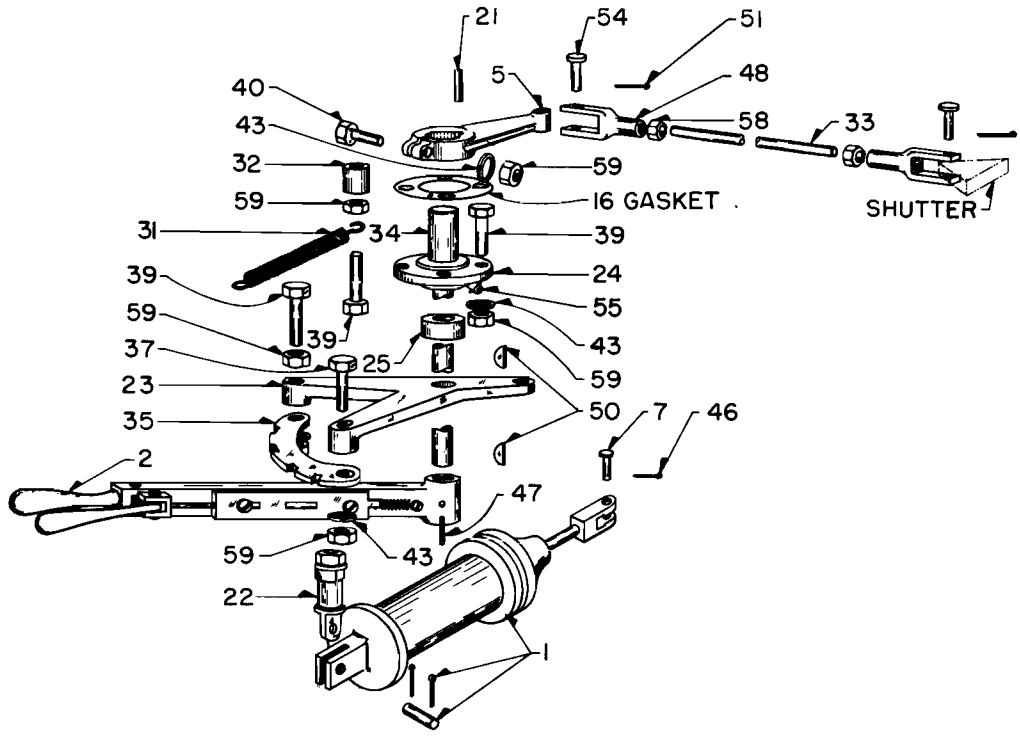

FRONT AUTOMATIC SHUTTER OPERATING MECHANISM

PLATE A521-2

P. L. No. B521

AUTOMATIC SHUTTER AND MANUAL OPERATING MECHANISM

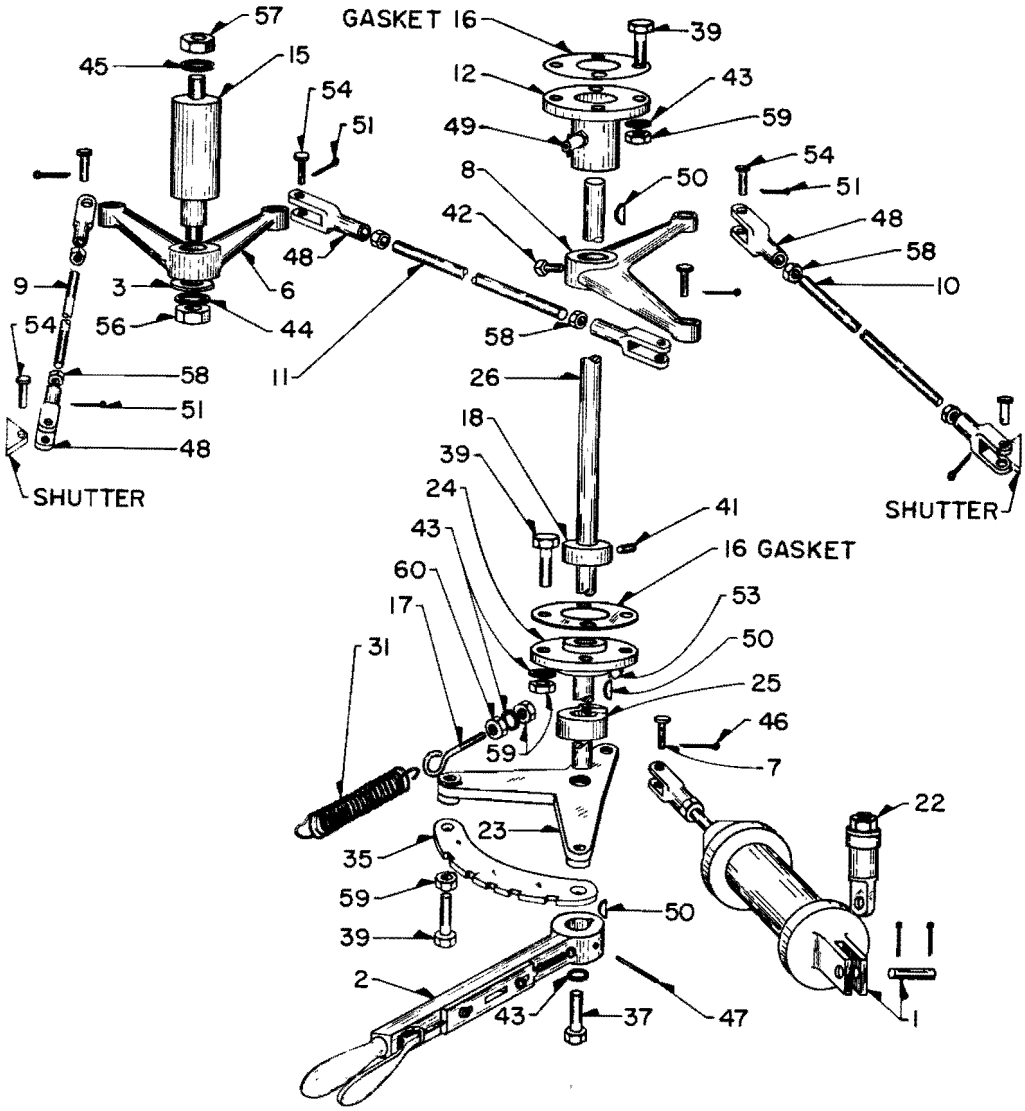

CENTER AUTOMATIC SHUTTER OPERATING MECHANISM

PLATE A521-3

P. L. No. B521

AUTOMATIC SHUTTER AND MANUAL OPERATING MECHANISM

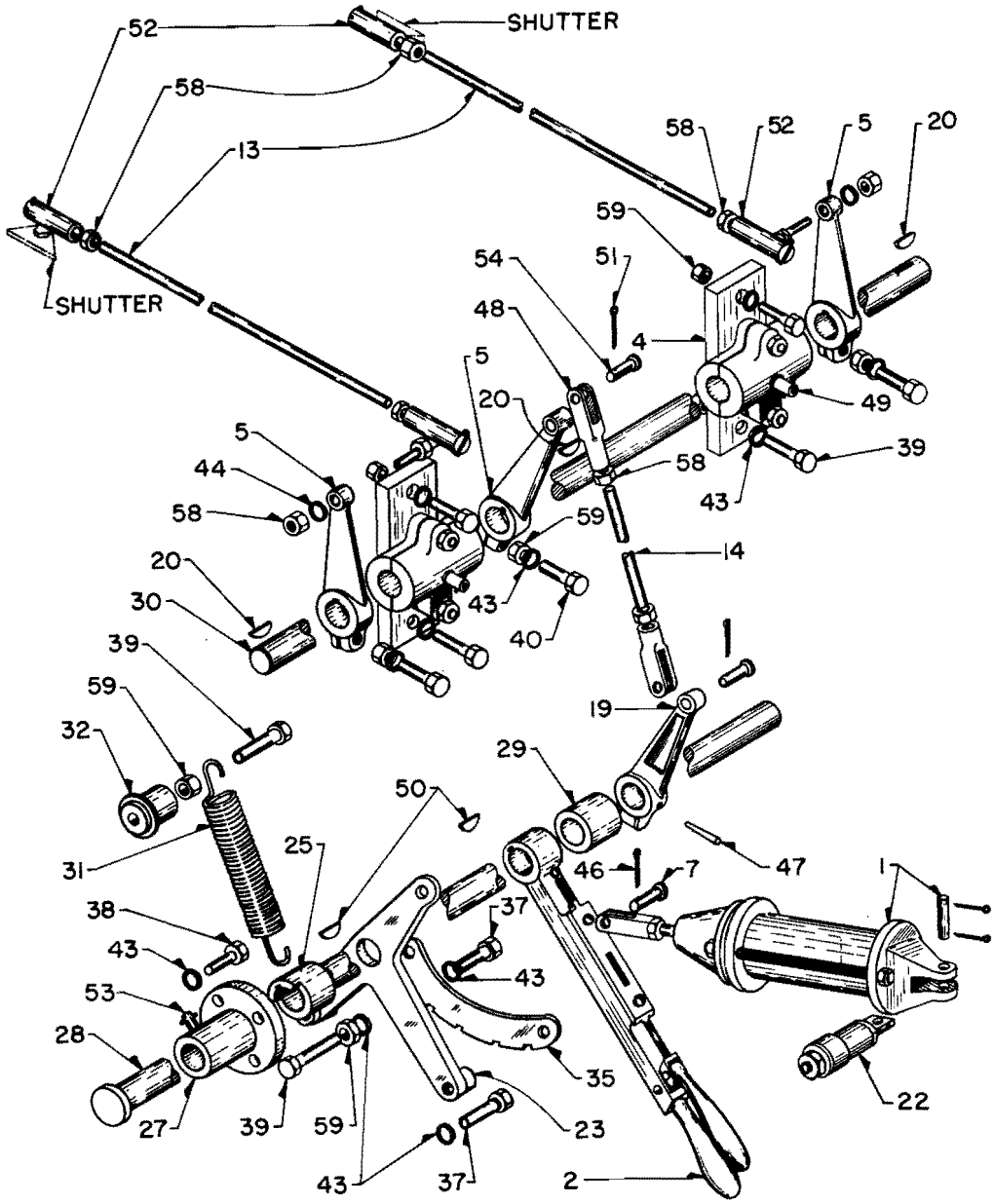

REAR AUTOMATIC SHUTTER OPERATING MECHANISM

PLATE A521-4

P. L. No. B521

AUTOMATIC SHUTTER AND MANUAL OPERATING MECHANISM

MANUAL OPERATING MECHANISM
MODEL E3, E4, E5, AND E6 LOCOMOTIVES

PLATE A521-5, 6, AND 7

Ref. No.	Part Number	No. Req.			Description
		1	-	-	FRONT SHUTTER OPERATING MECHANISM
		-	1	-	CENTER SHUTTER OPERATING MECHANISM
		-	-	1	REAR SHUTTER OPERATING MECHANISM
1	8105456	1	1	-	LEVER ASY. .. Shutter operating - See Plate 521-8
1A	8105153	-	-	1	LEVER ASY. .. Shutter operating - See Plate 521-8
2	8015833	-	-	2	BLOCK .. Pillow
3	8018018	1	-	3	LEVER .. Connection
4	8018620	-	1	-	CRANK .. Bell - L.S.
5	8022265	1	1	1	QUADRANT .. Lever
6	8022266	-	1	-	CRANK .. Bell - R.S.
7	8022267	-	1	-	ROD .. Shutter - Bell crank to shutter - L.S.
8	8022268	-	1	-	ROD .. Shutter - Bell crank to shutter - R.S.
9	8022269	-	1	-	ROD .. Bell crank connection
10	8022270	-	1	-	BRACKET .. Operating lever shaft - Top
11	8022284	1	1	-	BRACKET .. Operating lever shaft - Bottom
12	8022283	-	1	-	ROD .. Lever - Operating lever shaft
13	8022372	-	-	1	BRACKET . Operating lever support
14	8022373	-	-	1	SHAFT .. Pillow block
15	8022375	-	-	2	ROD .. Shutter
16	8022376	-	-	1	ROD .. Connecting - Operating lever to pillow block shaft
17	8022377	-	-	1	WASHER .. Operating lever bolt
18	8022387	-	1	-	SHAFT .. Bell crank stub
19	8022390	-	2	-	GASKET .. Operating lever shaft bracket
20	8022521	1	-	-	ROD .. Shutter
21	8022522	1	-	-	SHAFT .. Shutter lever
22	8050576	-	-	3	KEY .. Pillow block shaft - 1/4 x 1/4 x 1
23	8054430	1	-	-	KEY .. Shutter lever shaft - 1/4 x 1/4 x 1-5/16
24	8022374	-	-	1	BOLT .. Lever - Operating lever to bracket
25	179837	-	-	4	BOLT .. Support bracket - 3/8-16 x 1 hex. hd. - Replaces 100134
26	179841	6	10	6	BOLT .. Pillow Block and quadrant - 3/8-16 x 1-1/4 hex. hd. - Repls. 100135
27	179847	1	-	-	BOLT .. Connection lever - 3/8-16 x 2 hex. hd. - Replaces 100138
28	102872	-	1	-	SCREW .. Set - Bell crank - 1/4-20 x 3/4 sq. hd.
29	103321	6	10	13	WASHER .. Lock - 3/8
30	103323	-	1	4	WASHER .. Lock - 1/2
31	103326	-	1	-	WASHER .. Lock - 3/4
32	103578	-	-	1	PIN .. Taper - No. 1 x 2 in. lg.
33	103598	1	1	-	PIN .. Taper - No. 3 x 2 in. lg.
34	104039	2	6	2	END .. Adjustable yoke
35	105526	1	2	2	FITTING .. Grease - 1/8 P.T.
36	106751	1	2	-	KEY .. Woodruff - 3/16 x 3/4
37	108630	2	6	2	PIN .. Cotter - 1/8 x 7/8 in. lg.
38	109419	-	-	4	JOINT .. Ball - 1/2 P.T.
39	114787	2	6	2	PIN .. Yoke - 1/2
40	102637	-	1	-	NUT .. Bell crank stub shaft bolt - 1/2-13 hex. - Replaces 173685
41	220081	-	1	-	NUT .. Bell crank stub shaft bolt - 3/4-10 hex. - Replaces 173688
42	103028	2	6	10	NUT .. Shutter and connection rod - 1/2-20 hex. - Replaces 174802
43	102635	5	8	3	NUT .. Lever rod bolt - 3/8-16 hex. - Replaces 174847
44	179847	-	-	3	BOLT .. Connection lever - 3/8-16 x 2 hex. hd.
45	8015664	-	1	-	WASHER .. Bell crank

8022500 8022364 8022299

P. L. No. B521

AUTOMATIC SHUTTER AND MANUAL OPERATING MECHANISM

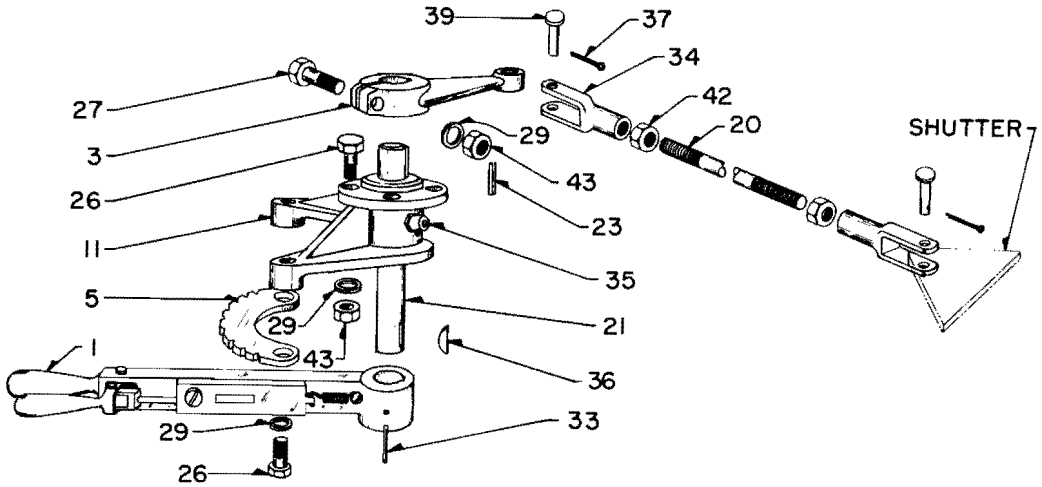

FRONT SHUTTER MANUAL OPERATING MECHANISM
PLATE A521-5

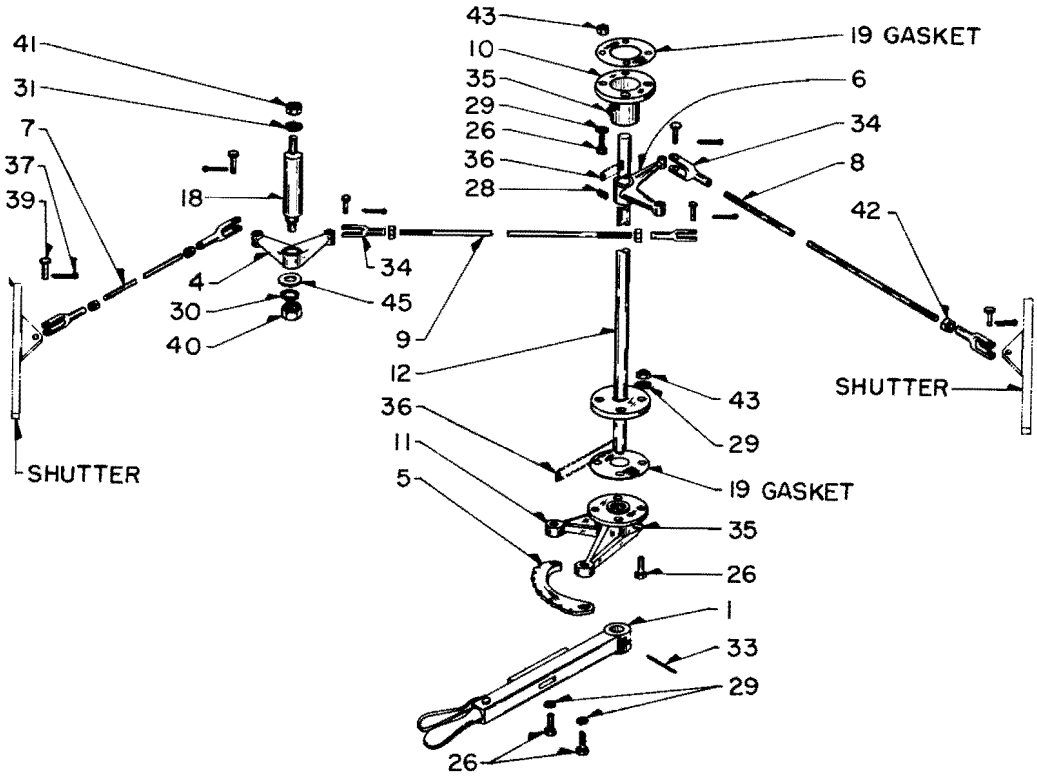

CENTER SHUTTER MANUAL OPERATING MECHANISM
PLATE A521-6

AUTOMATIC SHUTTER AND MANUAL OPERATING MECHANISM

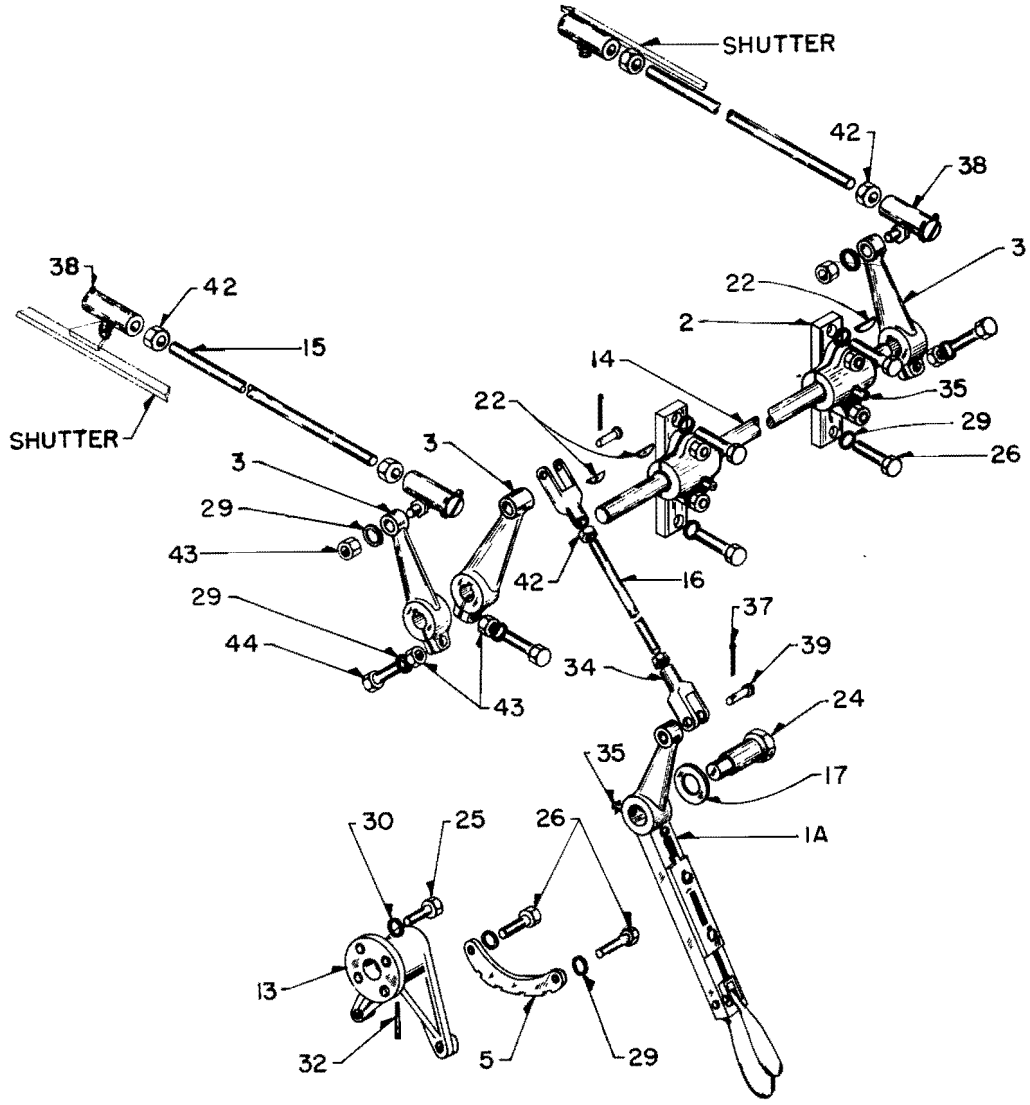

REAR SHUTTER MANUAL OPERATING MECHANISM

PLATE A521-7

P. L. No. B521

AUTOMATIC SHUTTER AND MANUAL OPERATING MECHANISM

OPERATING LEVER AND SWIVEL BOLT

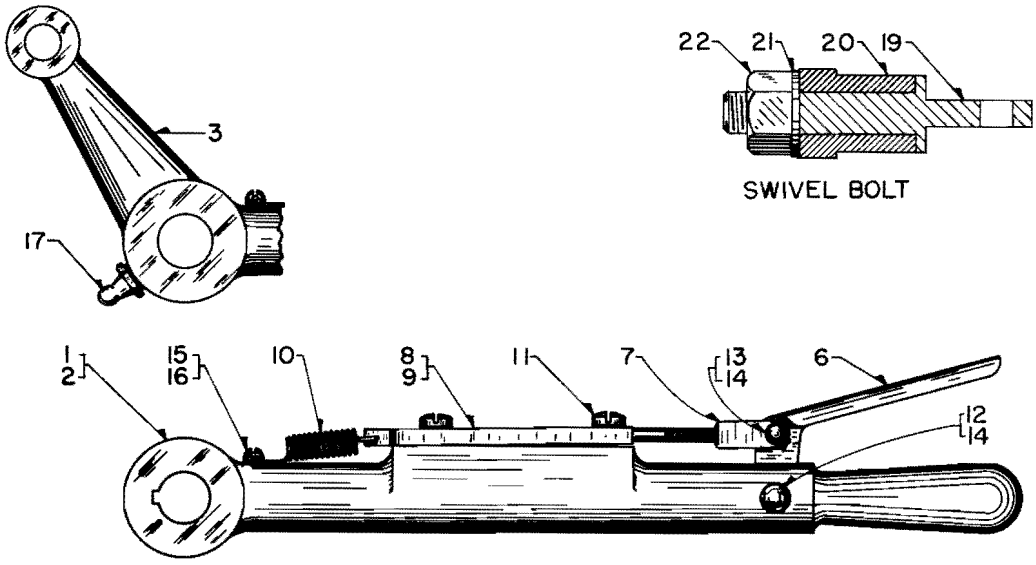

PLATE A521-8

Ref. No.	Part Number	No. Req.			Description
1	8058552	X	-	-	LEVER ASY. .. Automatic shutter operating
2	8105456	-	X	-	LEVER ASY. .. Manual shutter operating - Front and center shutter
3	8105153	-	-	X	LEVER ASY. .. Manual shutter operating - Rear shutter
* 4	8008861	1	1	-	LEVER .. Operating
* 5	8022357	-	-	1	LEVER .. Operating
6	8008860	1	1	1	GRIP .. Lever
7	8008863	1	1	1	CLEVIS .. Latch
8	8058553	1	-	-	LATCH
9	8012753	-	1	1	LATCH
10	8008866	1	1	1	SPRING .. Latch
11	8008865	2	2	2	SCREW .. Latch
12	8008867	1	1	1	PIN .. Lever grip
13	8008890	1	1	1	PIN .. Clevis
14	103361	2	2	2	PIN .. Cotter - 1/16 x 1/2 in. lg.
15	106497	1	1	1	WASHER .. Lock - No. 10
16	121826	1	1	1	SCREW .. Latch spring - 10-32 x 1/2 rd. hd. slotted
17	109461	-	-	1	FITTING .. Grease - 1/8 P.T.
*18	8055796	X			BOLT .. Swivel
19	8055797	1			BOLT .. Swivel eye
20	8055798	1			SLEEVE .. Swivel bolt
21	103345	1			WASHER .. Plain - 5/8
22	102639	1			NUT .. Swivel bolt - 5/8-11 hex. - Replaces 173687

P. L. No. B521

AUTOMATIC SHUTTER AND MANUAL OPERATING MECHANISM

SHUTTER ASSEMBLY
MODEL E3, E4, E5, E6, AND E7 LOCOMOTIVES

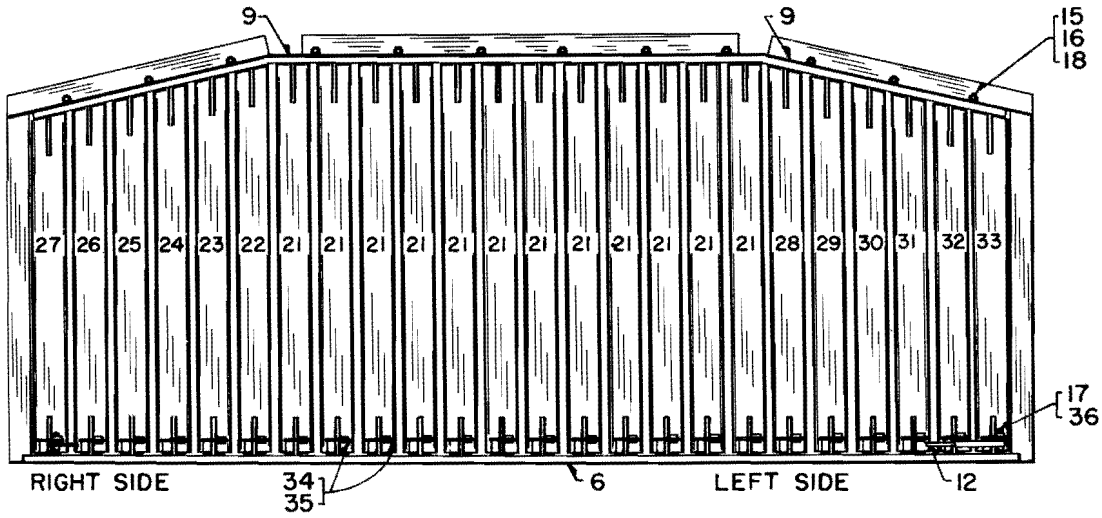

FRONT SHUTTER ARRANGEMENT

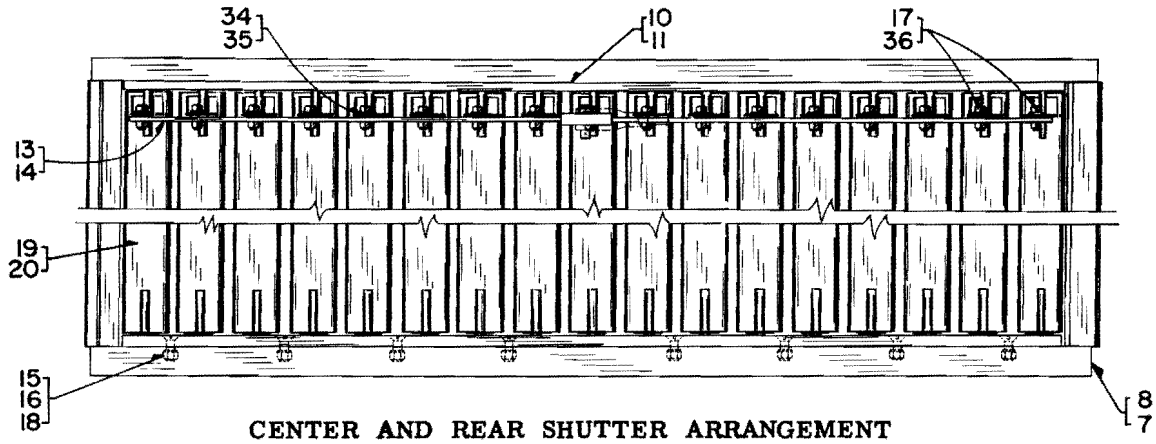

CENTER AND REAR SHUTTER ARRANGEMENT

PLATE A521-9

Ref. No.	Part Number	No. Required					Description
* 1	8127746	X	-	-	-	-	SHUTTER ASSEMBLY .. Front
* 2	8127221	-	X	-	-	-	SHUTTER ASSEMBLY .. Center - L.S.
* 3	8127745	-	-	X	-	-	SHUTTER ASSEMBLY .. Center - R.S.
* 4	8127741	-	-	-	X	-	SHUTTER ASSEMBLY .. Rear - L.S.
* 5	8127742	-	-	-	-	X	SHUTTER ASSEMBLY .. Rear - R.S.
6	8022514	1	-	-	-	-	BAR .. Bottom bearing
7	8021961	-	1	1	-	-	BAR .. Bottom bearing
8	8022383	-	-	-	1	1	BAR .. Bottom bearing
9	8098221	2	-	-	-	-	BAR .. Top bearing
10	8021962	-	1	1	-	-	BAR .. Top bearing
11	8022382	-	-	-	1	1	BAR .. Top bearing
12	8022516	1	-	-	-	-	BAR .. Operating
13	8021983	-	1	1	-	-	BAR .. Operating
14	8022379	-	-	-	1	1	BAR .. Operating

8127221 8127741 8127746
8127745 8127742

P. L. No. B521

AUTOMATIC SHUTTER AND MANUAL OPERATING MECHANISM

Ref. No.	Part Number	No. Required					Description
	8127746	X	-	-	-	-	SHUTTER ASSEMBLY .. Front (cont'd.)
	8127221	-	X	-	-	-	SHUTTER ASSEMBLY .. Center - L.S. (cont'd.)
	8127745	-	-	X	-	-	SHUTTER ASSEMBLY .. Center - R.S. (cont'd.)
	8127741	-	-	-	X	-	SHUTTER ASSEMBLY .. Rear - L.S. (cont'd.)
	8127742	-	-	-	-	X	SHUTTER ASSEMBLY .. Rear - R.S. (cont'd.)
15	103321	12	8	8	6	6	WASHER .. Lock - 3/8
16	114674	12	8	8	6	6	SCREW .. Bearing bar - 3/8-16 x 1-1/4 flat hd.
17	102634	24	17	17	11	11	NUT .. Shutter blade bolt - 5/16-18 hex. - Replaces 174845 and 431793
18	102635	12	8	8	6	6	NUT .. Bearing bar screw - 3/8-16 hex. - Replaces 429607

NOTE: All shutter blades include one 8008851 bushing and 8008852 ring.

19	8022280	-	17	-	11	-	BLADE .. Shutter
20	8021963	-	-	17	-	11	BLADE .. Shutter
21	8022501	12	-	-	-	-	BLADE .. Shutter
22	8022502	1	-	-	-	-	BLADE .. Shutter
23	8022503	1	-	-	-	-	BLADE .. Shutter
24	8022504	1	-	-	-	-	BLADE .. Shutter
25	8022505	1	-	-	-	-	BLADE .. Shutter
26	8022506	1	-	-	-	-	BLADE .. Shutter
27	8022507	1	-	-	-	-	BLADE .. Shutter
28	8022508	1	-	-	-	-	BLADE .. Shutter
29	8022509	1	-	-	-	-	BLADE .. Shutter
30	8022510	1	-	-	-	-	BLADE .. Shutter
31	8022511	1	-	-	-	-	BLADE .. Shutter
32	8022512	1	-	-	-	-	BLADE .. Shutter
33	8022513	1	-	-	-	-	BLADE .. Shutter
34	8008851	24	17	17	11	11	BUSHING .. Shutter blade - Located in shutter blade clip
35	8008852	24	17	17	11	11	RING .. Bushing - Retains bushing on clip
36	8010028	24	17	17	11	11	BOLT .. Shutter blade to operating bar - 5/16-18 x 1 hex. hd.

Parts List No. B522

AUTOMATIC SHUTTERS AND OPERATING MECHANISM

SD7 and SD9 LOCOMOTIVE

PLATE B522-1

Ref. No.	Part Number	No. Req.		Description
		A	-	SHUTTER APPLICATION - Left Side
		-	B	SHUTTER APPLICATION - Right Side
SHUTTER ASSEMBLY				
* 1	8178634	1	-	SHUTTER ASSEMBLY .. Front - See Plate 522-2
* 2	8178635	1	-	SHUTTER ASSEMBLY .. Rear - See Plate 522-2
3	8178636	-	1	SHUTTER ASSEMBLY .. Front - See Plate 522-2
4	8178637	-	1	SHUTTER ASSEMBLY .. Rear - See Plate 522-2
FRAME ASSEMBLY . . Grill				
5	8177955	2	2	FRAME ASSEMBLY .. Grill
6	8182306	1	1	STRIP .. Enclosure - Between grill frame assemblies
7	8129472	45	45	BOLT .. Frame and strip mounting - 5/16-18 x 1-1/2 truss hd. - Cross recess
ROD . . Shutter Operating				
8	8178532	2	2	ROD .. Shutter operating
9	109419	4	4	JOINT .. Ball - Shutter operating rod
10	103028	4	4	NUT .. 1/2-20 hex.
11	451406	1	1	NUT .. 1/2-20 hex.
12	103323	4	4	WASHER .. Lock - 1/2
CYLINDER ASSEMBLY . . Shutter Operating Air				
13	8080170	1	1	CYLINDER ASSEMBLY .. Air - See P. L. 520
14	179820	4	4	BOLT .. Cylinder to bracket - 5/16-18 x 1-1/4 hex. hd. - Replace 100123
15	103320	4	4	WASHER .. Lock - Cylinder to bracket - 5/16
16	8022111	1	1	PIN .. Clevis - Cylinder to operating lever
17	103385	1	1	PIN .. Cotter - 1/8 in. x 1 in. lg.
18	8144125	1	1	HOSE ASSEMBLY .. Air cylinder to piping
LEVER ASSEMBLY . . Shutter Operating				
19	8179817	1	1	LEVER ASSEMBLY .. Shutter operating
20	8148234	1	1	BEARING .. Lever
21	8148182	1	1	SPACER .. Lever
22	179890	1	1	BOLT .. Lever to bracket - 1/2-13 x 2-1/2 hex. hd. - Replaces 173837
23	103343	1	1	WASHER .. Plain - 1/2
24	103323	1	1	WASHER .. Lock - 1/2
BRACKET . . Air Cylinder Mounting				
*25	8179738	1	-	BRACKET ASSEMBLY .. Air cylinder mounting
26	8179739	-	1	BRACKET ASSEMBLY .. Air cylinder mounting
27	8090250	2	2	PAD .. Tapping
28	179883	2	2	BOLT .. Bracket to tapping pad - 1/2-13 x 1-1/4 hex. hd. - Replaces 173825
29	103323	2	2	WASHER .. Lock - 1/2

8187711 8208413

P. L. No. B522

AUTOMATIC SHUTTERS AND OPERATING MECHANISM

Ref. No.	Part Number	No. Req.		Description
				SHUTTER AIR PIPING - MAGNET VALVE TO AIR CYLINDER
		A	-	SD7 Locomotive
		-	B	SD9 Locomotive
*30	8059222	1	-	VALVE .. Magnet - Shutter operating - See Parts Group 4700
*31	8245565	-	1	VALVE .. Magnet - Shutter
32	118757	3	3	ELBOW .. 1/2 tube x 1/2 P. T.
33	118804	1	1	UNION .. 1/2 tube
34	118814	1	1	TEE .. 1/2 tube
35	118541	8	8	NUT .. 1/2 tube
36	8116856	A. R.	A. R.	TUBING .. 1/2 in. O. D. x .032 wall copper - 25 ft. - Approx. 10 ft. required
37	8108113	2	2	CLAMP ASSEMBLY .. Tube
38	8108206	2	2	CLAMP ASSEMBLY .. Tube

P. L. No. B522

AUTOMATIC SHUTTERS AND OPERATING MECHANISM

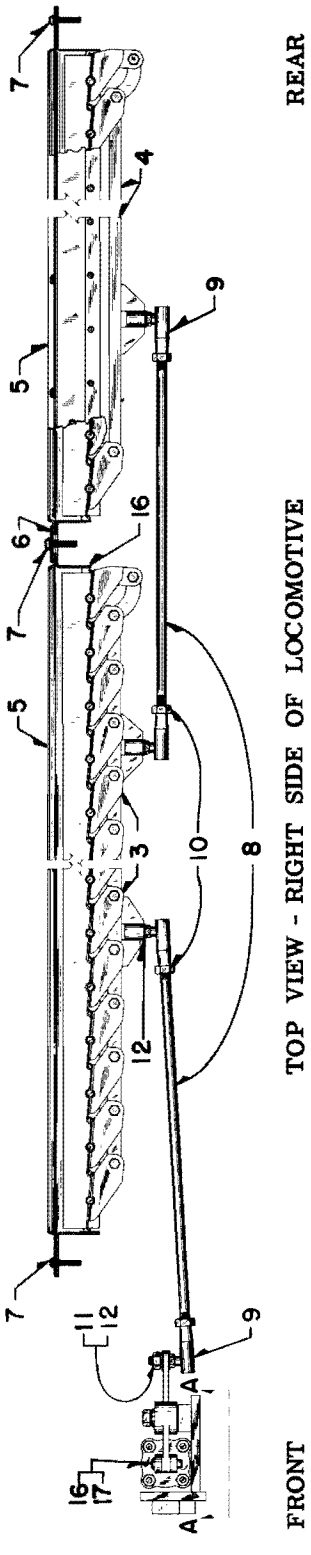

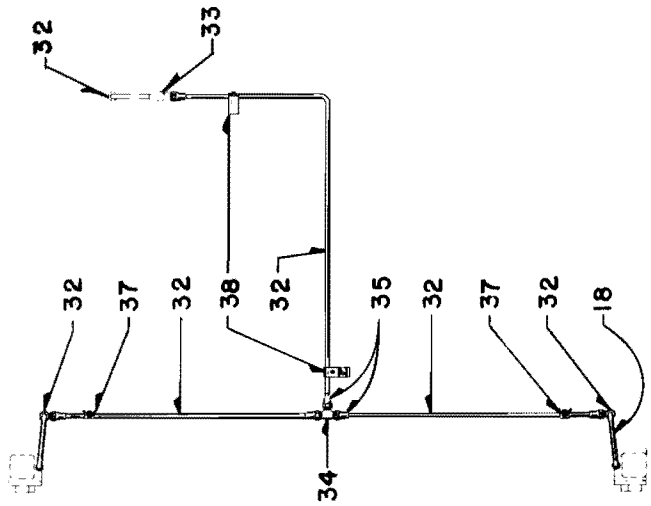

SHUTTER AIR PIPING - MAGNET VALVE TO AIR CYLINDER

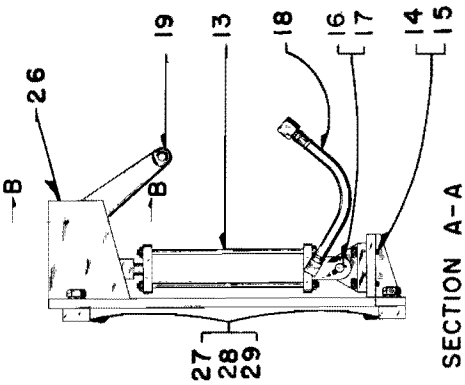

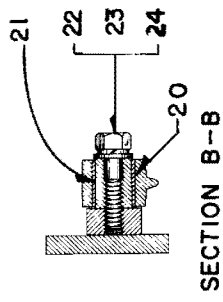

PLATE B522-1

P. L. No. B522

AUTOMATIC SHUTTERS AND OPERATING MECHANISM

SHUTTER ASSEMBLY - SD7 and SD9 LOCOMOTIVE

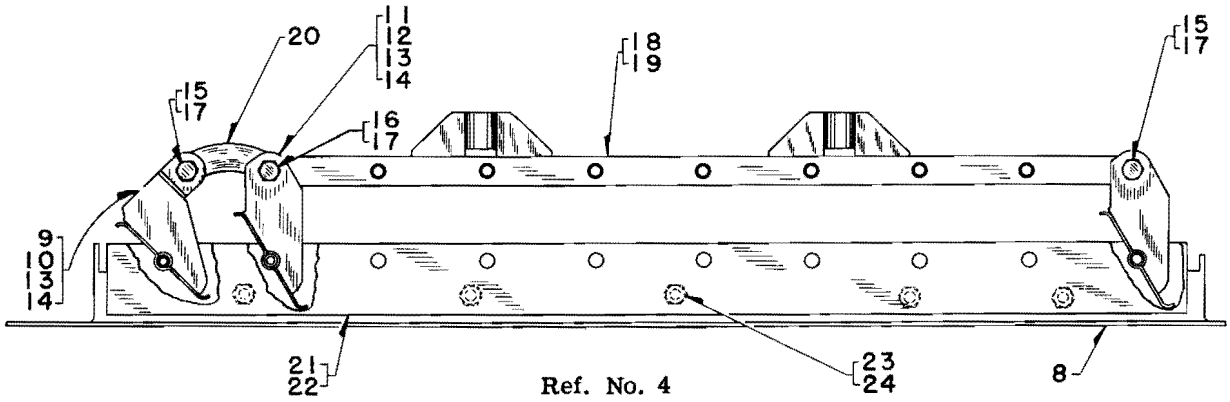

Ref. No. 4

PLATE B522-2

Ref. No.	Part Number	Number Required				Description
SHUTTER ASSEMBLY						
* 1	8178634	A	-	-	-	SHUTTER ASSEMBLY .. Left side - Front
* 2	8178635	-	B	-	-	SHUTTER ASSEMBLY .. Left side - Rear
* 3	8178636	-	-	C	-	SHUTTER ASSEMBLY .. Right side - Front
4	8178637	-	-	-	D	SHUTTER ASSEMBLY .. Right side - Rear
FRAME ASSEMBLY . . Shutter						
* 5	8178403	1	-	-	-	FRAME ASSEMBLY .. Shutter
* 6	8178404	-	1	-	-	FRAME ASSEMBLY .. Shutter
* 7	8177930	-	-	1	-	FRAME ASSEMBLY .. Shutter
8	8177929	-	-	-	1	FRAME ASSEMBLY .. Shutter
BLADE . . Shutter						
9	8165872	1	1	-	-	BLADE .. Shutter
10	8148022	-	-	1	1	BLADE .. Shutter
11	8165814	22	22	-	-	BLADE .. Shutter
12	8148021	-	-	22	22	BLADE .. Shutter
13	8008851	23	23	23	23	BEARING .. Shutter
14	8008852	23	23	23	23	RING .. Bearing retaining
15	8010028	22	22	22	22	BOLT .. Blade to operating rod and connecting link - 5/16-18 x 1 hex. hd.
16	179820	1	1	1	1	BOLT .. Blade to operating rod and connecting link - 5/16-18 x 1-1/4 hex. hd. - Replaces 100123
17	8031736	23	23	23	23	NUT .. Lock - 5/16-18 hex.
BAR ASSEMBLY . . Shutter Operating						
18	8178630	1	-	1	-	BAR ASSEMBLY .. Shutter operating
19	8178631	-	1	-	1	BAR ASSEMBLY .. Shutter operating
20	8148018	1	1	1	1	LINK .. Connecting
BAR . . Top and Bottom Bearing						
21	8177936	1	1	1	1	BAR .. Bottom bearing
22	8177937	1	1	1	1	BAR .. Top bearing
23	179837	5	5	5	5	BOLT .. Top bearing bar to shutter frame - 3/8-16 x 3/4 hex. hd. - Replaces 100133
24	103321	5	5	5	5	WASHER .. Lock - 3/8

Parts List No. A523

AUTOMATIC SHUTTERS AND OPERATING MECHANISM
E8 LOCOMOTIVE
(Not Illustrated)

Ref. No.	Part Number	No. Req.		Description
-	- - - -	X	-	SHUTTER ASSEMBLY .. Left side of locomotive - Cab end to rear end
-	- - - -	-	X	SHUTTER ASSEMBLY .. Right side of locomotive - Cab end to rear end
+ 1	8142468	1	-	SHUTTER ASSEMBLY .. No. 1 engine - See Page 3 Ref. No. 1
+ 2	8142469	-	1	SHUTTER ASSEMBLY .. No. 1 engine - See Page 3 Ref. No. 2
+ 3	8142880	1	-	SHUTTER ASSEMBLY .. No. 1 engine - See Page 3 Ref. No. 3
+ 4	8142881	-	1	SHUTTER ASSEMBLY .. No. 1 engine - See Page 3 Ref. No. 4
+ 5	8142882	1	-	SHUTTER ASSEMBLY .. No. 2 engine - See Page 3 Ref. No. 5
+ 6	8142879	-	1	SHUTTER ASSEMBLY .. No. 2 engine - See Page 3 Ref. No. 23
+ 7	8143129	1	-	SHUTTER ASSEMBLY .. No. 2 engine - See Page 3 Ref. No. 24
+ 8	8143128	-	1	SHUTTER ASSEMBLY .. No. 2 engine - See Page 3 Ref. No. 25
+ 9	8144137	1	-	SHUTTER ASSEMBLY .. Boiler room compartment - See Page 3 Ref. No. 26
+ 10	8144138	-	1	SHUTTER ASSEMBLY .. Boiler room compartment - See Page 3 Ref. No. 27
+ 11	8080170	2	2	CYLINDER ASSEMBLY .. Shutter operating - See Parts List 520
+ 12	8003765	2	-	VALVE .. Air magnet - See Parts List 4702
				NOTE: The shutters located in the boiler room compartment are manually operated. The other shutters operate automatically.
				AUTOMATIC SHUTTERS
13	8129472	116	116	BOLT .. 5/16-18 - Truss hd. - Cross recess - Shutter frame
14	156477	8	8	SCREW .. 5/16-18 - Flat hd. - Cross recess - Frame to strip
15	8134222	2	2	STRIP .. Center
16	- - - -	A.R.	A.R.	TUBING .. Copper - Approx. 60 ft. required - Available 50 ft. lg. 8116730
17	118541	20	4	NUT .. Flared tube
18	8108258	4	-	CLAMP .. Tube
19	8078817	2	-	COCK .. 1/4 P.T. - Tube
20	8040317	4	-	CONNECTOR .. 1/2 tube x 1/4 P.T.
21	8142340	1	-	BRACKET .. Air magnet valve
22	8142341	1	-	BRACKET .. Air magnet valve
23	8142342	2	2	ROD .. Shutter operating
24	8142343	2	2	ROD .. Shutter operating
25	8144125	2	2	HOSE .. Air cylinder
26	103321	12	8	WASHER .. Lock - Magnet valve and cylinder bracket
27	8117624	2	-	VENTURI .. 3/8 P.T. - Air magnet valve
28	120147	1	-	NIPPLE .. 3/8 P.T.
29	118809	2	-	TEE .. 1/2 tube
30	8091829	2	2	BRACKET .. Air cylinder
31	8080215	2	2	BRACKET .. Air cylinder lever
32	8091138	2	2	LEVER .. Air cylinder
33	8022111	2	2	PIN .. Link - Air cylinder to lever
34	108630	2	2	PIN .. Cotter
35	8091139	2	2	BOLT .. 1/2-13 special - Lever bracket
36	8022377	2	2	WASHER .. Special - Lever bracket bolt

P. L. No. A523

AUTOMATIC SHUTTERS AND OPERATING MECHANISM
E8 LOCOMOTIVE

Ref. No.	Part Number	No. Req.		Description
37	100123	8	8	BOLT .. Hex. hd. - Air cylinder bracket
38	431793	8	8	NUT .. Hex. - Air cylinder bracket
39	103320	8	8	WASHER .. Lock - Air cylinder bracket
40	109461	2	2	FITTING .. Grease - Air cylinder bracket and lever
41	109419	8	8	JOINT .. Ball - Air cylinder lever and operating rod
42	103323	4	4	WASHER .. Lock - Ball joint
43	103028	12	12	NUT .. Hex. - Ball joint
44	179841	12	8	BOLT .. Hex. hd. - Lever bracket
45	429607	10	6	NUT .. Hex. - Lever bracket
46	118814	2	4	ELBOW .. Tube - Air cylinder
47	120142	3	-	ELBOW .. Tube - Air magnet valve
48	8108113	6	6	CLAMP .. Tube
49	- - - -	2	-	CABLE AND CONDUIT ASSEMBLY .. Shutter magnet valve
50	- - - -	A.R.	-	CONDUIT .. 1/2 I.P.S. - Approx. 4 ft. required - Available 10 ft. lg. 8116953
51	8038389	4	-	ELBOW .. 1/2 P.T. x 90
52	8038594	4	-	BUSHING .. 1/2 female
53	8038584	4	-	NUT .. Lock - 1/2
54	8142955	4	-	NIPPLE .. Close - 1/2 NPSM
55	- - - -	A.R.	-	LOOM .. 1/2 I.D. - Approx. 5-1/2 ft. required - Available 25 ft. lg. 8122152
56	- - - -	A.R.	-	CABLE .. 19/25 (N61 and SMV) - Approx. 28-1/2 ft. required - Avail. 500 ft. lg. 8133265
57	8123282	4	-	LUG .. Terminal - 1/4 stud
58	8124200	2	-	BOX ASSEMBLY .. Conduit - Air magnet valve
59	8124201	2	-	BRACKET .. Conduit box
60	8124202	2	-	COVER .. Conduit box
61	122159	8	-	SCREW .. Slotted - Rd. hd.
62	121841	8	-	WASHER .. Lock
63	8126723	4	-	CONNECTOR .. Cable - Conduit box
64	118814	1	-	ELBOW .. Tube
65	118757	2	-	ELBOW .. Tube - Air magnet valve
66	8061467	1	-	NIPPLE .. 3/8 P.T. short - Air magnet valve
67	8049247	1	-	TEE .. 3/8 P.T. - Air magnet valve
68	8108260	4	-	CLAMP .. Tube
69	118804	-	2	CONNECTOR .. 1/2 tube
				MANUAL SHUTTERS
70	8153304	1	-	HANDLE .. Operating
71	8153301	-	1	HANDLE .. Operating
72	8153306	1	-	BRACKET .. Operating handle
73	8153305	-	1	BRACKET .. Operating handle
74	103385	1	1	KEY .. Cotter
75	8014524	1	1	PIN .. Clevis
76	103343	1	1	WASHER .. Plain
77	109419	2	2	JOINT .. Ball
78	103028	2	2	NUT .. Hex.
79	8148176	1	1	ROD .. Operating
80	8129472	58	58	BOLT .. 5/16-18 - Cross recess truss head

P. L. No. A523

AUTOMATIC SHUTTERS AND OPERATING MECHANISM
SHUTTER ASSEMBLY
E8 LOCOMOTIVE

(Not Illustrated)

Ref. No.	Part Number	No. Req.					Description
1	8142468	1	-	-	-	-	SHUTTER ASSEMBLY .. From Page 1 Ref. No. 1
2	8142469	-	1	-	-	-	SHUTTER ASSEMBLY .. From Page 1 Ref. No. 2
3	8142880	-	-	1	-	-	SHUTTER ASSEMBLY .. From Page 1 Ref. No. 3
4	8142881	-	-	-	1	-	SHUTTER ASSEMBLY .. From Page 1 Ref. No. 4
5	8142882	-	-	-	-	1	SHUTTER ASSEMBLY .. From Page 1 Ref. No. 5
6	8145839	1	-	-	-	-	FRAME .. Shutter - Includes bottom bearing bar
7	8146291	-	1	-	-	-	FRAME .. Shutter - Includes bottom bearing bar
8	8145840	-	-	1	-	-	FRAME .. Shutter - Includes bottom bearing bar
9	8146293	-	-	-	1	-	FRAME .. Shutter - Includes bottom bearing bar
10	8145841	-	-	-	-	1	FRAME .. Shutter - Includes bottom bearing bar
11	8084874	18	-	9	-	-	BLADE .. Shutter
12	8084941	-	18	-	9	9	BLADE .. Shutter
13	8008851	18	18	9	9	9	BUSHING .. Blade clip
14	8008852	18	18	9	9	9	RING .. Bushing retaining
15	8142325	1	1	-	-	-	BAR .. Operating
16	8142324	-	-	1	1	1	BAR .. Operating
17	8142300	1	1	-	-	-	BAR .. Top bearing
18	8142297	-	-	1	1	1	BAR .. Top bearing
19	106329	5	5	4	4	4	BOLT .. Hex. hd. - Top bearing bar
20	103321	5	5	4	4	4	WASHER .. Lock - Top bearing bar
21	8010028	18	18	9	9	9	BOLT .. 5/16-18 hex. hd. - Operating bar to clip
22	8031736	18	18	9	9	9	NUT .. 5/16-18 self-locking - Operating bar to clip
23	8142879	1	-	-	-	-	SHUTTER ASSEMBLY .. From Page 1 Ref. No. 6
24	8143129	-	1	-	-	-	SHUTTER ASSEMBLY .. From Page 1 Ref. No. 7
25	8143128	-	-	1	-	-	SHUTTER ASSEMBLY .. From Page 1 Ref. No. 8
26	8144137	-	-	-	1	-	SHUTTER ASSEMBLY .. From Page 1 Ref. No. 9
27	8144138	-	-	-	-	1	SHUTTER ASSEMBLY .. From Page 1 Ref. No. 10
28	8146292	1	-	-	-	-	FRAME .. Shutter - Includes bottom bearing bar
29	8145838	-	1	-	-	-	FRAME .. Shutter - Includes bottom bearing bar
30	8146294	-	-	1	-	-	FRAME .. Shutter - Includes bottom bearing bar
31	8147043	-	-	-	1	-	FRAME .. Shutter - Includes bottom bearing bar
32	8147044	-	-	-	-	1	FRAME .. Shutter - Includes bottom bearing bar
33	8084874	9	-	18	-	-	BLADE .. Shutter
34	8084941	-	18	-	-	-	BLADE .. Shutter
35	8143978	-	-	-	17	17	BLADE .. Shutter
36	8008851	9	18	18	17	17	BUSHING .. Blade clip
37	8008852	9	18	18	17	17	RING .. Bushing retaining
38	8142324	1	-	-	-	-	BAR .. Operating
39	8142325	-	1	1	-	-	BAR .. Operating
40	8143977	-	-	-	1	1	BAR .. Operating
41	8142297	1	-	-	-	-	BAR .. Top bearing
42	8142300	-	1	1	-	-	BAR .. Top bearing
43	8143844	-	-	-	1	1	BAR .. Top bearing
44	106329	4	5	5	6	6	BOLT .. Hex. hd. - Top bearing bar
45	103321	4	5	5	6	6	WASHER .. Lock - Top bearing bar
46	8010028	9	18	18	17	17	BOLT .. 5/16-18 hex. hd. - Operating bar to clip
47	8031736	9	18	18	17	17	NUT .. 5/16-18 self-locking - Operating bar to clip

Parts List No. A524

AUTOMATIC SHUTTER AND OPERATING MECHANISM
GP7 LOCOMOTIVE
PLATE A524-1

Ref. No.	Part Number	No. Req.		Description
-	- - - -	X	-	SHUTTER ASSEMBLY .. Front section (Cab end)
-	- - - -	-	X	SHUTTER ASSEMBLY .. Rear section
1	8080170	2	2	CYLINDER ASSEMBLY .. Shutter operating-See Parts List 520
2	8003765	1	1	VALVE .. Air magnet - See Parts List 4702
3	8148100	1	2	SHUTTER ASSEMBLY .. See Plate 524-2
4	8148111	1	2	SHUTTER ASSEMBLY .. See Plate 524-2
5	8165813	1	-	SHUTTER ASSEMBLY .. See Plate 524-2
6	8165815	1	-	SHUTTER ASSEMBLY .. See Plate 524-2
7	8148115	-	2	SHUTTER ASSEMBLY .. See Plate 524-2
				NOTE: The shutters for No.1 cooling fan are manually operated, shutters for all other fans are operated automatically.
				Manual Shutter
8	8148199	2	-	BRACKET .. Bell crank - Manual shutter
9	8148006	2	-	CRANK .. Bell - Manual shutter
10	8148007	2	-	SPACER .. Bushing - Bell crank
11	8020893	2	-	KNOB .. Bell crank
12	100138	2	-	BOLT .. Hex. head - Bell crank to bracket
13	8032743	2	-	NUT .. Self locking - 3/8-16 hex.
14	8155520	2	-	PLATE .. Name (Open) - Manual shutter
15	8155519	2	-	PLATE .. Name (Close) - Manual shutter
16	145368	8	-	SCREW .. Drive - Name plate
17	8148010	2	-	ROD .. Operating - Manual shutter
18	109419	2	-	JOINT .. Ball
19	117051	4	-	NUT .. Light hex.
20	8148011	2	-	JOINT .. Ball
21	103323	4	-	WASHER .. Lock
				Automatic Shutter
22	8148178	2	-	ROD .. Operating - Shutter to bell crank arm
23	8148179	2	-	ROD .. Operating - Bell crank to air cylinder
24	- - - -	-	-	Reference number not used
25	8148176	-	2	ROD .. Operating - Bell crank to front shutter
26	8148180	-	4	ROD .. Operating - Front to center shutter and center to rear shutter
* 27	8148010	-	1	ROD .. Operating - Bell crank to air cylinder - R.H.
* 28	8148177	-	1	ROD .. Operating - Bell crank to air cylinder - L.H.
29	109419	8	10	JOINT .. Ball (Thread length 1-1/8 inch)
30	117051	8	12	NUT .. Light hex.
31	8148114	-	2	JOINT .. Ball (Thread length 7/8 inch)
32	8054504	-	4	CLEVIS .. Operating rod
33	121978	-	4	NUT .. Hex.
34	451406	7	8	NUT .. Hex. - Ball joint to bell crank arm
35	114496	1	-	NUT .. Hex. - Bell crank to operating rod - L.H.
36	103323	14	14	WASHER .. Lock
37	8148185	2	2	CRANK .. Bell - Operating rod
38	8148234	2	2	BEARING .. Self lubricating - Bell crank
39	8148182	2	2	SPACER .. Bell crank
40	106265	4	-	WASHER .. Plain - Bell crank
* 41	103343	-	2	WASHER .. Plain - Bell crank
42	173837	2	2	BOLT .. Hex. head - Bell crank mounting
43	8148198	2	-	SUPPORT .. Bell crank
* 44	8148211	-	2	SUPPORT .. Bell crank

P. L. No. A524

AUTOMATIC SHUTTER AND OPERATING MECHANISM
GP7 LOCOMOTIVE

Ref. No.	Part Number	No. Req.		Description
-	- - - -	X	-	SHUTTER ASSEMBLY .. Front section (Cont'd.)
-	- - - -	-	X	SHUTTER ASSEMBLY .. Rear section (Cont'd.)
45	8022111	2	2	PIN .. Clevis - Air cylinder clevis to lever
46	103385	2	2	PIN .. Cotter - Clevis pin
47	8158302	1	1	BRACKET ASSEMBLY .. Air cylinder and magnet valve - Left side of locomotive
48	8158397	1	1	BRACKET ASSEMBLY .. Air cylinder - Right side of locomotive
49	173819	6	6	BOLT .. Hex. head - Bracket mounting
50	103323	6	6	WASHER .. Lock - Bracket mounting
51	8148186	2	2	LEVER ASSEMBLY .. Air cylinder
* 52	8148234	2	2	BEARING .. Self lubricating
* 53	8148182	2	2	SPACER .. Lever bearing
54	173837	2	2	BOLT .. Hex. head - Lever to lever bracket
55	103323	2	2	WASHER .. Lock - Lever to lever bracket
56	103343	2	2	WASHER .. Plain - Lever to lever bracket
57	8080215	2	2	BRACKET .. Lever
58	100135	10	10	BOLT .. Hex. head - Bracket to bracket - Magnet valve to bracket
59	103321	10	10	WASHER .. Lock
60	429607	10	10	NUT .. Hex.
61	100123	8	8	BOLT .. Hex. head - Air cylinder back head to bracket
62	103320	8	8	WASHER .. Lock
63	431793	8	8	NUT .. Hex.
+ 64	8100193	2	2	PIN .. Clevis - Air cylinder back head
+ 65	137185	4	4	PIN .. Cotter - Clevis pin
+ 66	8110192	2	2	BRACKET .. Back head
67	8144125	2	2	HOSE ASSEMBLY .. Magnet valve to air cylinder
* 68	118757	2	2	ELBOW .. 1/2 in. tube x 3/8 P.T.
* 69	8049247	1	1	TEE .. 3/8 in.
* 70	8117624	1	1	VENTURI
* 71	120146	1	1	NIPPLE .. 3/8 P.T. x 2-1/2
* 72	120142	1	1	ELBOW .. 1/2 tube x 3/8 female P.T.
73	- - - -	A.R.	A.R.	TUBING .. 1/2 inch - Avail. 50 ft. lg. 8116730
74	118541	6	6	NUT .. Tube
75	8040317	2	2	CONNECTOR .. 1/2 tube x 1/4 P.T.
76	8078817	1	1	COCK .. 1/4 inch
* 77	118752	1	1	CONNECTOR .. 1/2 tube x 3/8 P.T.
78	118804	1	1	UNION .. 1/2 tube
* 79	8108206	1	1	CLAMP .. 1/2 tube
* 80	8108113	4	-	CLAMP .. 1/2 tube overhead and left side
81	8108207	1	-	CLAMP .. 1/2 tube - Right side
82	- - - -	A.R.	A.R.	TAPE .. Pressure sensitive - Avail. 100 ft. lg. 8133198
83	8148206	2	-	FRAME .. Grill - Includes screen - Right and left side - One frame covers two shutters
84	8148209	-	2	FRAME .. Grill - Includes screen - Right and left side - One frame covers three shutters
85	8129472	58	80	BOLT .. Truss head cross recess - Frame mounting
86	8135324	58	80	NUT .. Hex. self locking - Frame mounting

P. L. No. A524

AUTOMATIC SHUTTER AND OPERATING MECHANISM
GP7 LOCOMOTIVE

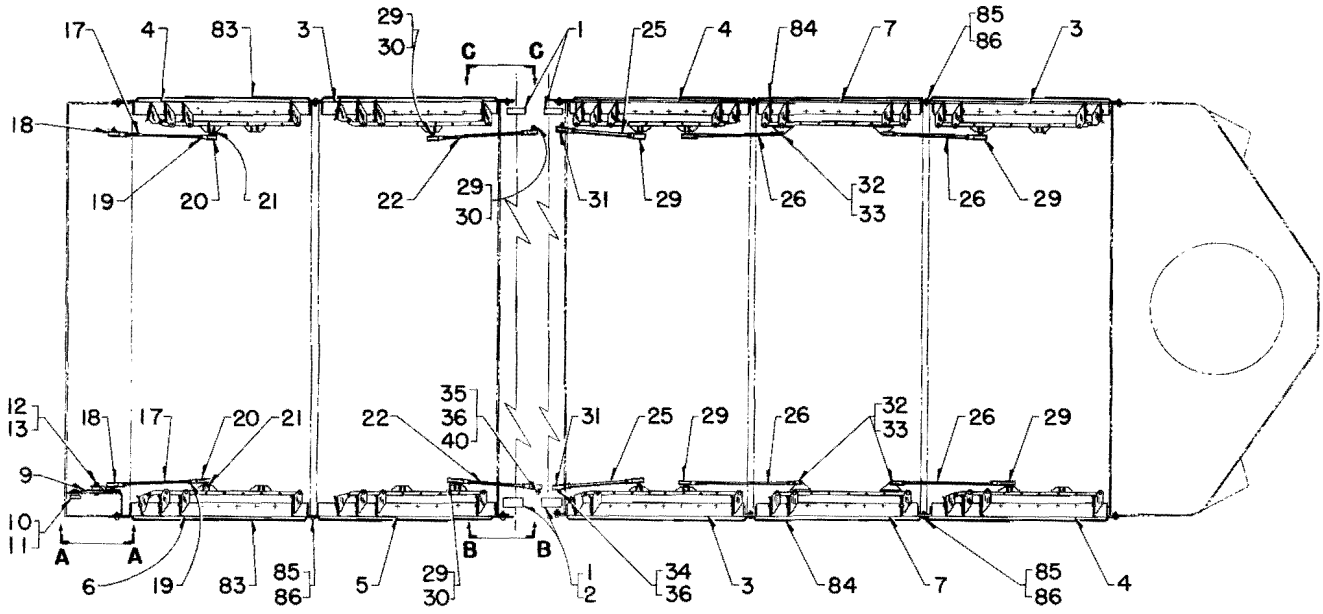

FRONT OF LOCOMOTIVE

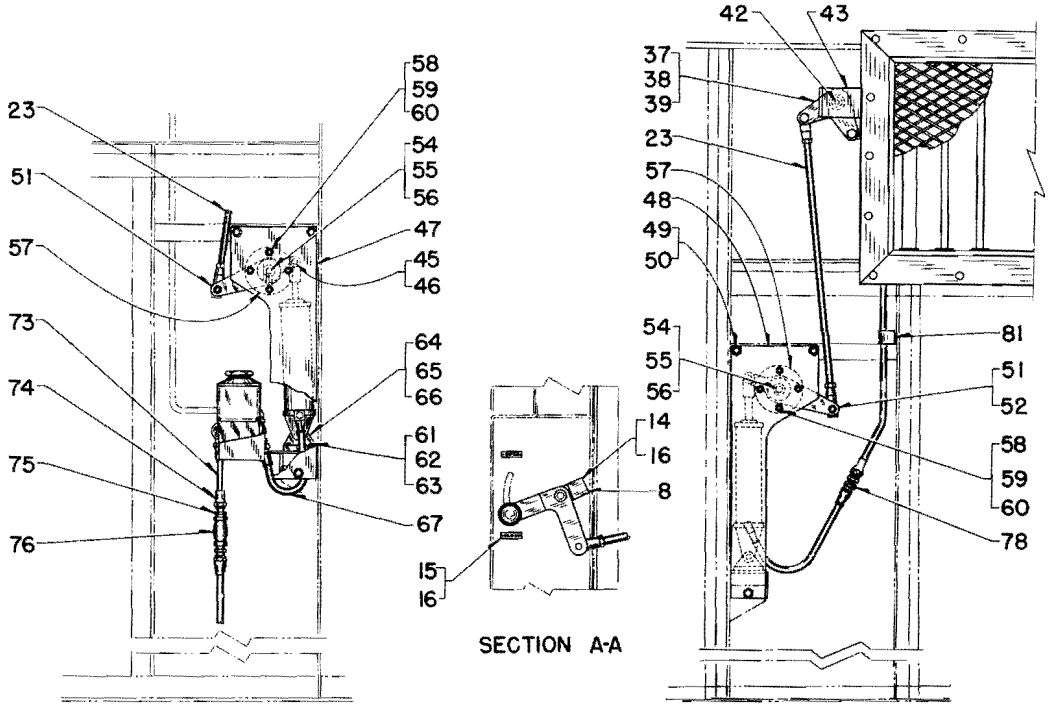

PLATE A524-1

P. L. No. A524

AUTOMATIC SHUTTER AND OPERATING MECHANISM
GP7 LOCOMOTIVE

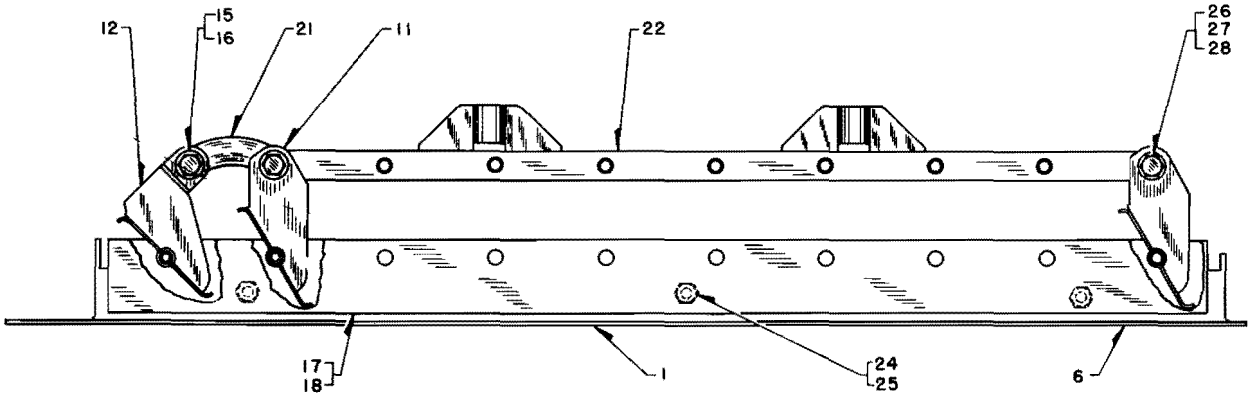

PLATE A524-2

Ref. No.	Part Number	No. Req.					Description
1	8148100	X	-	-	-	-	SHUTTER ASSEMBLY .. From Plate 524-1 Ref. No. 3
* 2	8148111	-	X	-	-	-	SHUTTER ASSEMBLY .. From Plate 524-1 Ref. No. 4
* 3	8148115	-	-	X	-	-	SHUTTER ASSEMBLY .. From Plate 524-1 Ref. No. 7
* 4	8165813	-	-	-	X	-	SHUTTER ASSEMBLY .. From Plate 524-1 Ref. No. 5
* 5	8165815	-	-	-	-	X	SHUTTER ASSEMBLY .. From Plate 524-1 Ref. No. 6
6	8148101	1	-	-	-	-	FRAME .. Shutter - Less bearing bars
* 7	8148112	-	1	-	-	-	FRAME .. Shutter - Less bearing bars
* 8	8148116	-	-	1	-	-	FRAME .. Shutter - Less bearing bars
* 9	8167916	-	-	-	1	-	FRAME .. Shutter - Less bearing bars
* 10	8167915	-	-	-	-	1	FRAME .. Shutter - Less bearing bars
11	8148021	9	9	9	-	-	BLADE .. Shutter
12	8148022	1	1	-	-	-	BLADE .. Shutter
* 13	8165814	-	-	-	9	9	BLADE .. Shutter
* 14	8165872	-	-	-	1	1	BLADE .. Shutter
15	8008851	10	10	9	10	10	BUSHING .. Blade (Located in shutter blade clip)
16	8008852	10	10	9	10	10	RING .. Bushing (Retains bushing on clip)
17	8148107	1	1	-	1	1	BAR .. Top bearing
18	8148108	1	1	-	1	1	BAR .. Bottom bearing
* 19	8148119	-	-	1	-	-	BAR .. Top bearing
* 20	8148120	-	-	1	-	-	BAR .. Bottom bearing
21	8148018	1	1	-	1	1	LINK .. Connecting
22	8148109	1	1	-	1	1	BAR .. Shutter operating
* 23	8148122	-	-	1	-	-	BAR .. Shutter operating
24	122119	3	3	3	3	3	BOLT .. Hex. head - Upper bearing bar to frame
25	120382	3	3	3	3	3	WASHER .. Lock
26	8010028	9	9	9	9	9	BOLT .. Hex. head - 5/16-18 x 1 - Blade to operating bar
27	122027	1	1	-	1	1	BOLT .. Hex. head - Connecting link to operating bar
28	8031736	10	10	9	10	10	NUT .. Self locking - 5/16-18

Parts List No. B525

WATER BY-PASS VALVE

NW2, SW AND TR LOCOMOTIVES

PLATE B525-1

Ref. No.	Part Number	Number Required			Description
VALVE ASSEMBLY . . Water By-Pass					
1	8161902	1	-	-	VALVE ASSEMBLY . . Water by-pass - Air cylinder operated - Replaced by 8180595
2	8180595	-	1	-	VALVE ASSEMBLY . . Water by-pass - Air cylinder operated - Replaces 8161902
3	8236289	-	-	1	VALVE ASSEMBLY . . Water by-pass - Air pressure operated
BODY . . Water By-Pass Valve					
4	8161903	1	1	-	BODY . . Water by-pass valve
5	8247527	-	-	1	BODY . . Water by-pass valve
SEAT . . Water By-Pass Valve					
6	8155038	1	-	-	SEAT . . Water by-pass valve
7	8180598	-	1	-	SEAT . . Water by-pass valve
8	8155050	1	1	-	GASKET . . Seat to body
VALVE . . Water By-Pass					
9	8155047	1	1	-	VALVE . . By-pass - Large
10	8155048	1	1	-	VALVE . . By-pass - Small
11	8155039	1	1	-	RING . . Valve seat
12	8155046	1	1	-	SPACER . . Valve
13	446882	1	1	-	BOLT . . Valve to valve - 3/8-16 x 1-3/4 hex. hd.
14	8032846	1	1	-	NUT . . Lock - 3/8-16 hex. - Brass
SHAFT . . Valve Operating					
15	8155044	1	1	-	SHAFT . . Valve operating
16	8155043	1	1	-	CAP . . Shaft to housing
17	8155049	1	1	-	GASKET . . Cap to housing
18	8155042	1	1	-	GLAND . . Valve operating shaft
19	8155045	1	1	-	PACKING . . Gland to shaft
LEVERS . . Valve Operating					
20	8155040	1	1	-	LEVER . . Shaft to valves
21	8155041	1	1	-	LEVER . . Shaft to air cylinder
22	187074	2	2	-	BOLT . . Levers to shaft - 3/8-16 x 1-1/4 hex. hd.
23	120382	1	1	-	WASHER . . Lock - 3/8
CYLINDER . . Piston Valve					
24	8247528	-	-	1	CYLINDER . . Piston valve
25	8247534	-	-	1	GASKET . . Cylinder to body
26	179818	-	-	8	BOLT . . Cylinder to body - 5/16-18 x 1 hex. hd.
27	112723	-	-	8	WASHER . . Lock - 5/16

P. L. No. B525

WATER BY-PASS VALVE

Ref. No.	Part Number	Number Required			Description
	8161902	1	-	-	VALVE ASSEMBLY - (continued)
	8180595	-	1	-	VALVE ASSEMBLY - (continued)
	8236289	-	-	1	VALVE ASSEMBLY - (continued)

CAP . . Piston Valve Cylinder

28	8247530	-	-	1	CAP . . Piston valve cylinder
29	8247535	-	-	1	GASKET . . Cap to cylinder
30	179818	-	-	3	BOLT . . Cap to cylinder - 5/16-18 x 1 hex. hd.
31	112723	-	-	3	WASHER . . Lock - 5/16

VALVE ASSEMBLY . . Piston

32	8247529	-	-	1	VALVE ASSEMBLY . . Piston
33	8247533	-	-	1	PACKING . . Piston valve assembly to cylinder
34	8247536	-	-	1	RING . . "O" - Piston valve assembly to body

SPRING AND GUIDE . . Valve Assembly Piston

35	8247531	-	-	1	SPRING
36	8247532	-	-	1	GUIDE . . Spring

P. L. No. B525

WATER BY-PASS VALVE

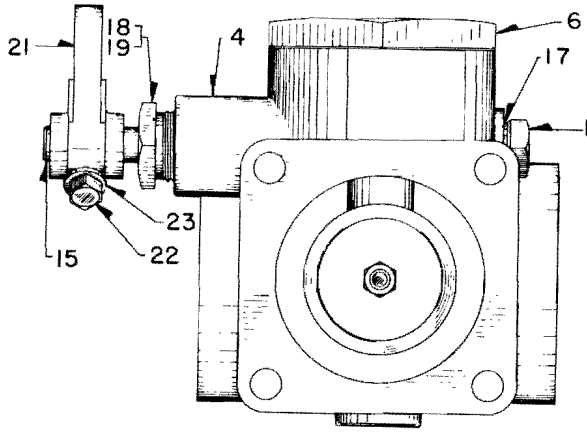

FRONT END VIEW

Ref. No. 1

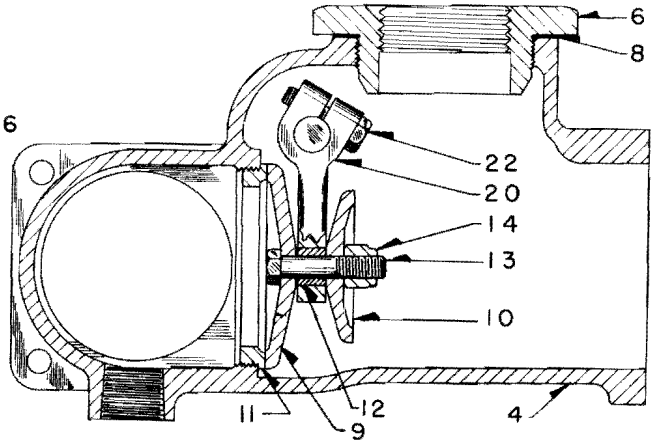

CUTAWAY SIDE VIEW

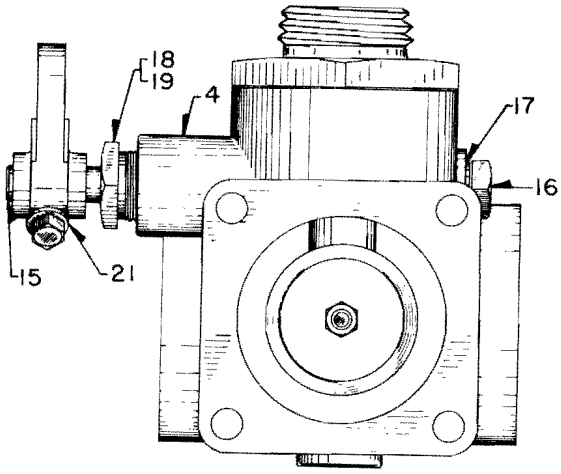

FRONT END VIEW

Ref. No. 2

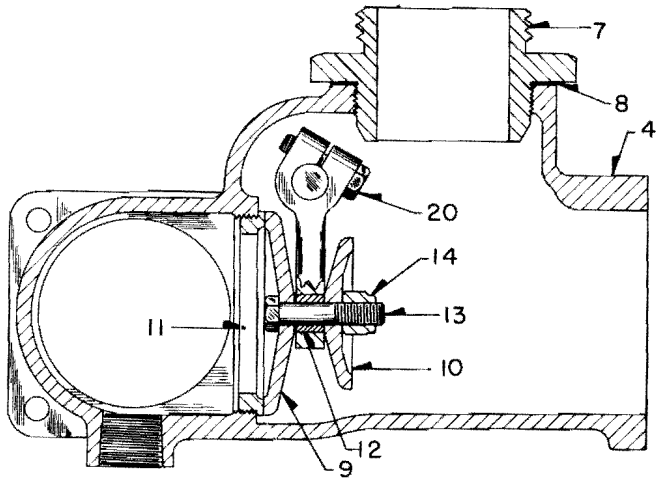

CUTAWAY SIDE VIEW

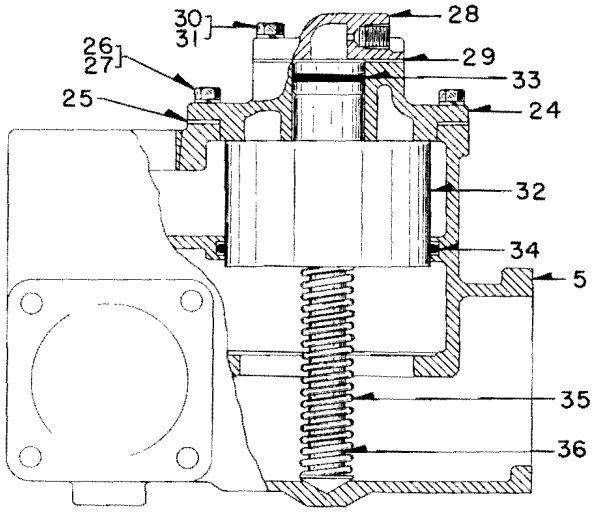

Ref. No. 3

WATER BY-PASS VALVE

PLATE B525-1

Parts List No. B529

MANUAL SHUTTER OPERATING MECHANISM

SW1 AND NW2 LOCOMOTIVES

PLATE B529-1

Ref. No.	Part Number	No. Req.		Description
		X	-	SW1 LOCOMOTIVE - 600 H.P.
		-	X	NW2 LOCOMOTIVE - 1000 H.P.
1	8133131	1	-	SHUTTER .. Assembly - See Plate 530-2
* 1A	8125691	-	1	SHUTTER .. Assembly - See Plate 530-2
2	104038	4	6	CLEVIS .. Operating rod
3	114785	4	6	PIN .. Clevis
4	107762	4	6	PIN .. Cotter - 3/32 x 5/8
5	451400	4	6	NUT .. Operating rod - Replaces 174848
6	8025438	1	1	ROD .. Operating - Short
7	8014262	2	4	LEVER .. Shutter countershaft - 6 in. lg.
8	8115244	1	-	SHAFT .. Counter
9	103597	4	7	PIN .. Taper - No. 3 x 1-3/4
10	8024581	2	-	BEARING .. Shutter countershaft
11	8034678	1	-	SPACER .. Countershaft
12	8025437	1	-	ROD .. Operating - Long
13	- - - -	A.R.	A.R.	PIPE .. Operating rod guide - 3/8 in. - 16 ft. req. - Avail. 20 ft. lg. - 8116832
14	120279	3	3	TEE .. Pipe - 3/8 x 3/8 x 1/4
15	103878	3	3	PLUG .. Pipe - 1/4 in. sq. hd.
16	8024579	1	1	LEVER .. Operating shaft - 4-1/2 in. lg.
17	8024582	1	1	BEARING .. Operating lever shaft
18	178100	3	3	SCREW .. Cap - 1/2-13 x 1 hex. hd. - Replaces 173819
19	103323	6	6	WASHER .. Lock - 1/2 in.
20	8115226	1	1	SHAFT .. Operating lever
21	8025392	1	1	PLATE .. Trim
22	8024619	1	1	HOUSING .. Operating lever lower
23	173825	3	3	SCREW .. Cap - 1/2-13 x 1-1/4 hex. hd.
24	8044609	1	1	QUADRANT
*24A	8102483	1	1	LEVER ASSEMBLY .. Operating
25	8106558	1	1	LEVER .. Operating
26	8008860	1	1	GRIP .. Lever
27	8008867	1	1	PIN .. Lever grip
28	103361	2	2	PIN .. Cotter - 1/16 x 1/2
29	8008890	1	1	PIN .. Clevis
30	8008863	1	1	LATCH .. Clevis
31	8008865	2	2	SCREW .. Single shoulder machine
32	8012753	1	1	LATCH .. Lever - Engages in notches cut in quadrant
33	8008866	1	1	SPRING .. Latch
34	121826	1	1	SCREW .. 10-32 x 1/2 rd. hd.
35	106497	1	1	WASHER .. Lock - No. 10
36	8024604	1	1	HOUSING .. Operating lever upper
37	114676	4	4	SCREW .. 3/8-16 x 1-1/2 flat hd.
38	8032969	-	1	BEARING .. Bell crank
39	8115132	-	1	SHAFT .. Bell crank
40	179841	-	4	BOLT .. 3/8-16 x 1-1/4 hex. hd. - Replaces 100135
41	110730	-	12	WASHER .. Lock - 3/8
42	429607	-	4	NUT .. 3/8-16 hex. - Replaces 174847
43	8032966	-	1	ROD .. Intermediate operating
44	8032900	-	1	BEARING .. Upper intermediate
45	8032983	-	1	SHAFT .. Upper intermediate

P. L. No. B529

MANUAL SHUTTER OPERATING MECHANISM

Ref. No.	Part Number	No. Req.		Description
		X	-	SW1 LOCOMOTIVE - 600 H.P. (cont'd.)
		-	X	NW2 LOCOMOTIVE - 1000 H.P. (cont'd.)
46	179839	-	4	BOLT .. 3/8-16 x 1 hex. hd. - Replaces 100134
47	8032982	-	1	SHAFT .. Lower intermediate - 3 ft. 8-1/2 in. lg.
48	8032896	-	1	HOUSING .. Lever
49	8032987	-	1	PLATE .. Lever housing
50	179838	-	4	SCREW .. Cap - Lever housing to floor - 3/8-16 x 7/8 hex. hd. - Replaces 106330
*51	8032984	-	1	ROD .. Operating - 3/8 dia. x 21 ft. 5-1/8 in. lg.

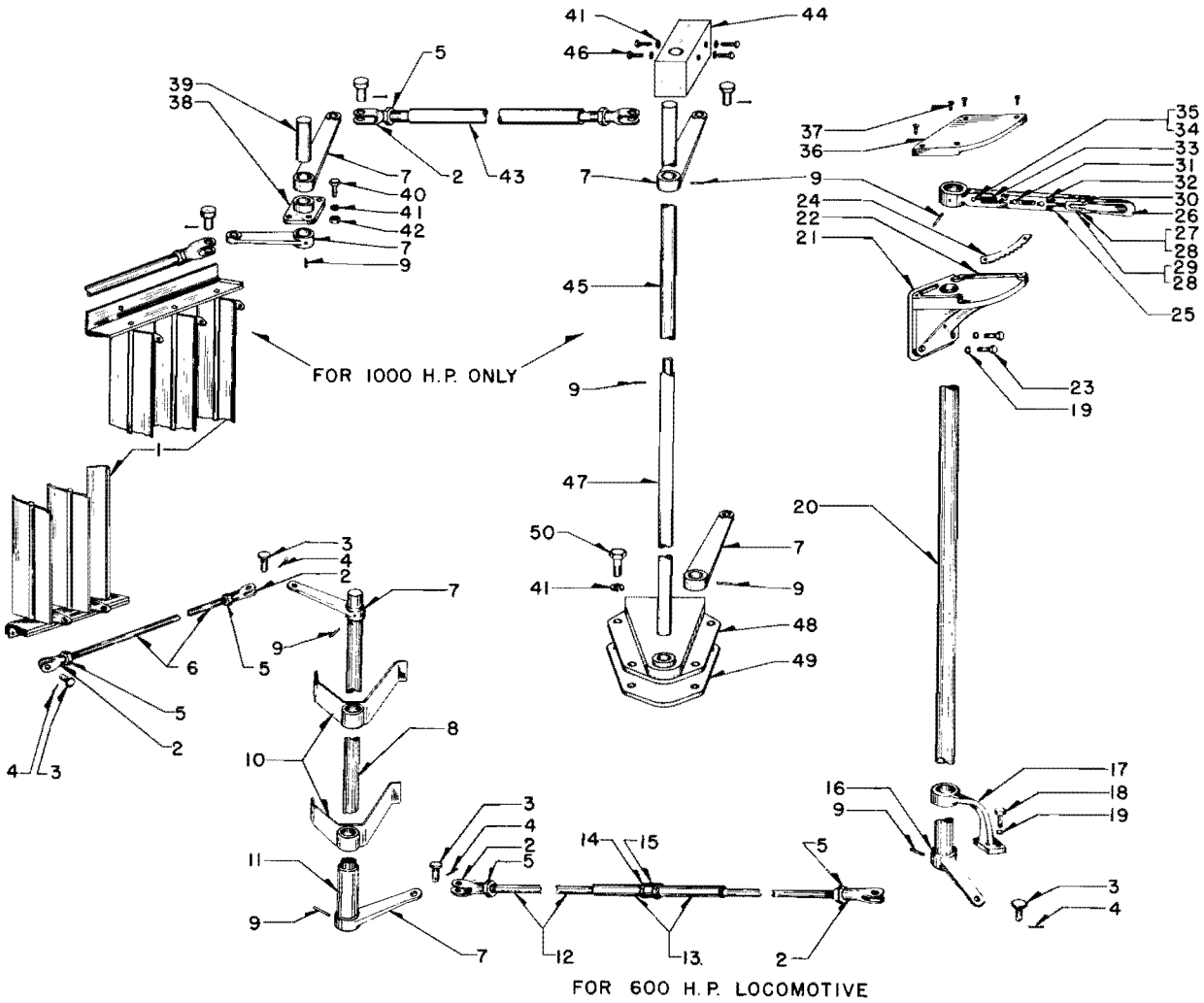

PLATE B529-1

Parts List No. D530

AUTOMATIC SHUTTER AND OPERATING MECHANISM

SW1, NW2, SW7, SW8, SW9, SW600, SW900, SW1200 LOCOMOTIVES

SHUTTER OPERATING MECHANISM

SW1, NW2, SW7, SW8, SW9 LOCOMOTIVES

PLATE C530-1

Ref. No.	Part Number	No. Required					Description
		X	-	-	-	-	SW1 - As illustrated
		-	X	-	-	-	NW2 - Same as SW1 except the shutter operating cylinder is located above shutter instead of below as illustrated
		-	-	X	-	-	SW7
		-	-	-	X	-	SW8
		-	-	-	-	X	SW9
1	8080170	1	1	-	-	-	CYLINDER ASSEMBLY .. Air - See P. L. 520
2	8151368	-	-	1	1	1	CYLINDER ASSEMBLY .. Air - Hanna Company - See P. L. 520
* 2A	8151449	-	-	A	A	A	CYLINDER ASSEMBLY .. Air - S-P Mfg. Co.- Optional - See P. L. 520
				R	R	R	

NOTE: Air cylinders Ref. Nos. 2 and 2A are optional. Cylinder assemblies are interchangeable; their component parts are not.

3	8133131	1	-	-	-	-	SHUTTER ASSEMBLY .. See Plate 530-3
4	8125691	-	1	-	-	-	SHUTTER ASSEMBLY .. See Plate 530-3
5	8151249	-	-	1	-	-	SHUTTER ASSEMBLY .. See Plate 530-3
5	8163095	-	-	-	1	-	SHUTTER ASSEMBLY .. See Plate 530-3
6	8024581	1	-	-	-	-	BEARING .. Shutter counter shaft
* 7	8032969	-	1	-	-	-	BEARING .. Operating lever shaft
8	8080215	-	-	1	1	1	BRACKET .. Lever
9	8098972	1	1	-	-	-	SHAFT .. Shutter operating lever
10	8014262	1	1	-	-	-	LEVER .. Shutter operating rod - 6 inch
11	8098955	1	1	-	-	-	LEVER .. Cylinder operating
12	8156019	-	-	1	1	1	LEVER .. Cylinder operating
13	8022111	1	1	1	1	1	PIN .. Clevis
14	8161867	-	-	1	1	1	BOLT .. Operating lever to bracket
15	8022377	-	-	1	1	1	WASHER .. Special - 1/4 inch
*15A	114505	-	-	1	1	1	NUT .. Lever to bracket bolt - 1/2-13 hex. - Replaces 174515
16	8226696	1	-	-	-	-	HOSE .. Air - 5/16 I.D. - Replaces 8095421
16	8144125	-	1	1	1	1	HOSE .. Air - 5/16 I.D. - With connections - 10 in. lg.
17	8120503	1	-	-	-	-	BRACKET .. Cylinder support
*18	8098591	-	1	-	-	-	BRACKET .. Cylinder support
19	140638	1	-	-	-	-	CONNECTOR .. Flared tube - 3/8 P.T.
19	8106068	-	1	1	1	1	UNION .. Reducing - 1/2 x 3/8 tube
20	8073344	1	-	-	-	-	NIPPLE .. Pipe - Air line - Brass - Replaces 120285
21	- - - -	A	A	A	A	A	TUBING .. Copper - 3/8 O.D. - Available 50 ft. - 8122230
		R	R	R	R	R	
22	103320	4	4	4	-	-	WASHER .. Lock - 5/16
23	102634	4	4	-	-	-	NUT .. 5/16-18 hex.
24	179820	4	4	-	-	-	BOLT .. Bracket mounting - 5/16-18 x 1-1/4 hex. head - Replaces 100123
25	8112997	1	1	-	-	-	VENTURI .. Cylinder - With 1/16 inch orifice
25	8162106	-	-	1	1	1	VENTURI .. Cylinder - With 1/32 inch orifice and hex. center

P. L. No. D530

AUTOMATIC SHUTTER AND OPERATING MECHANISM

Ref. No.	Part Number	No. Required					Description
		X	-	-	-	-	SW1 - As illustrated (continued)
		-	X	-	-	-	NW2 - Same as model SW1 except the shutter operating cylinder is located above shutter instead of below as illustrated (continued)
		-	-	X	-	-	SW7 (continued)
		-	-	-	X	-	SW8 (continued)
		-	-	-	-	X	SW9 (continued)
26	179818	-	-	4	4	4	BOLT .. Cylinder swivel bracket mounting - 5/16-18 x 1 hex. head - Replaces 100122
27	179547	1	1	-	-	-	ELBOW .. Reducing - 3/8 x 1/4 P.T.
27	144075	-	-	1	1	1	COUPLING .. 1/4 tube x 1/4 F.P.T.
28							Ref. No. not used
29	104038	2	2	-	-	-	CLEVIS .. Operating rod
30	103026	2	2	-	-	-	NUT .. Operating rod - 3/4-24 hex. - Replaces 174848
31	114785	2	2	-	-	-	PIN .. Clevis - 3/8 x 1-3/32 in. lg.
32	107762	2	2	-	-	-	PIN .. Cotter - 3/32 x 5/8 in. lg..
33	8025438	1	1	-	-	-	ROD .. Shutter operating
34	118539	11	11	11	12	12	NUT .. Flared tube - 3/8
35	8040313	1	1	1	1	1	CONNECTOR .. 3/8 tube x 3/8 P.T.
36	108630	1	1	1	1	1	PIN .. Cotter - 1/8 x 7/8 in. lg.
37	120281	1	1	1	1	1	TEE .. Pipe - Air inlet line - 3/8 P.T.
38	103597	2	2	-	-	-	PIN .. Taper - Shaft - 1-3/4 in. lg.
39	8094740	1	1	1	1	1	SWITCH .. Temperature control - See P. L. 5507
40	8003765	1	1	1	1	1	VALVE .. Air magnet - See P. L. 4702
41	8112996	1	1	1	1	1	BRACKET .. Shutter control mounting
42	179841	2	2	6	6	6	BOLT .. Magnet valve and lever bracket - 3/8-16 x 1-1/4 hex. head - Replaces 100135
43	103321	2	2	2	2	2	WASHER .. Lock - 3/8
44	102635	2	2	2	2	2	NUT .. 3/8 x 16 hex. - Replaces 174847
45	100751	2	2	2	2	2	SCREW .. 8/32 x 1/2 round head slotted machine
46	106496	2	2	2	2	2	WASHER .. Lock - No. 8
47	118750	2	2	2	2	2	CONNECTOR .. Flared tube - Cock and filter - 3/8 x 1/4 P.T.
48	8078817	1	1	1	1	1	COCK .. Air cut-out
49	8004170	1	1	1	1	1	FILTER .. Air - See P. L. 1073
50	8108119	1	1	1	1	1	CLAMP ASSEMBLY .. Air filter
51	429607	1	1	1	1	1	NUT .. 3/8-16 hex. - Replaces 174847
52	103321	1	1	1	1	1	WASHER .. Lock - 3/8
53	8061466	1	1	1	1	1	NIPPLE .. Short - 1/4 P.T.
54	8039169	2	2	2	1	1	ELBOW .. Flared tube - 3/8 tube x 3/8 M.P.T.
54	8040350	-	-	-	1	1	ELBOW .. Flared tube - 3/8 tube x 3/8 F.P.T.
*54A	8060972	-	-	-	1	1	NIPPLE .. Short - 3/8 P.T.
55	118812	2	2	2	-	-	ELBOW .. Flared tube - 3/8 tube
56	121758	1	1	1	-	-	NUT .. Flared tube - 3/8
57	109461	-	-	1	1	1	FITTING .. Lubrication - Lever - 1/8 straight
58	8032743	-	-	4	4	4	NUT .. Lever bracket - 3/8-16 hex.
*59	8118162	-	-	-	1	1	ORIFICE .. Filter outlet - 1/4 P.T. - 1/16 in. orifice
*60	121323	-	-	-	2	2	CONNECTOR .. Tube - 3/8 tube x 1/4 F.P.T.

P. L. No. C530

AUTOMATIC SHUTTER AND OPERATING MECHANISM

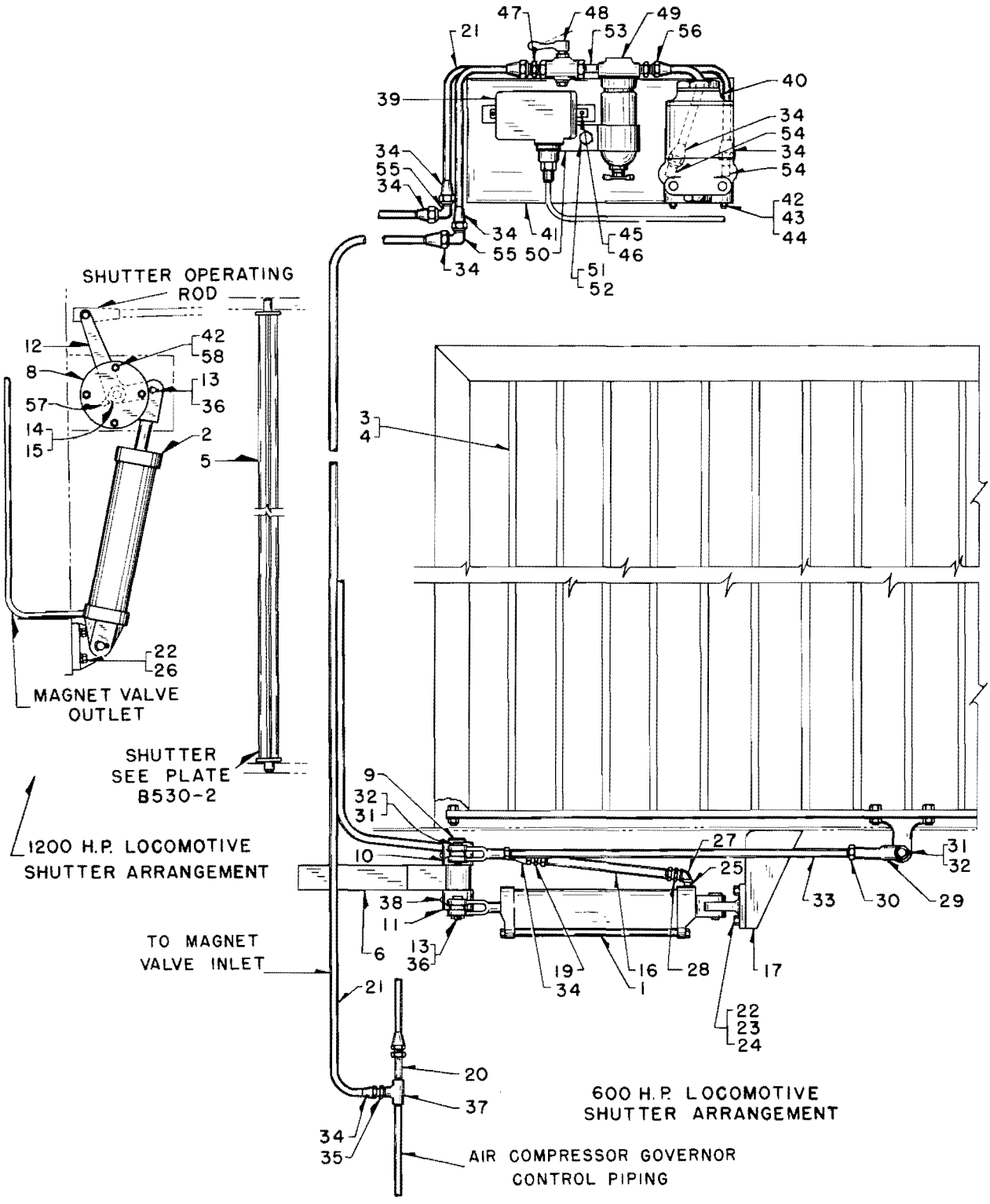

SW1, NW2, SW7, SW8, SW9, SW600, SW900, SW1200 LOCOMOTIVES

PLATE C530-1

P. L. No. D530

AUTOMATIC SHUTTER AND OPERATING MECHANISM

SHUTTER OPERATING MECHANISM
SW600, SW900, SW1200 LOCOMOTIVES

PLATE A530-2

Ref. No.	Part Number	No. Req.	Description
1	8151368	1	CYLINDER ASSEMBLY .. Air - See P. L. 520
1A	8151449	A R	CYLINDER ASSEMBLY .. Air - Optional - See P. L. 520

NOTE: Air cylinders, Ref. Nos. 1 and 1A, are optional. Although the cylinder assemblies are interchangeable, their component parts are not.

* 2	8163095	1	SHUTTER ASSEMBLY .. See Plate 530-3
3	8080215	1	BRACKET .. Lever
4	8181605	1	LEVER ASSEMBLY .. Cylinder operating
5	8022111	1	PIN .. Clevis
6	108630	1	PIN .. Cotter - 1/8 x 7/8
7	103348	1	WASHER .. Plain - 1 in.
8	8148182	1	SPACER .. Bracket lever
9	179890	1	BOLT .. 1/2-13 x 2-1/4 hex. head
10	103323	3	WASHER .. Lock - 1/2
11	179841	4	BOLT .. 3/8-16 x 1-1/4 hex. head
12	103321	6	WASHER .. Lock - 3/8
13	8181062	1	BRACKET ASSEMBLY .. Support
14	8206389	1	VALVE .. Solenoid
15	179839	2	BOLT .. Valve mounting - 3/8-16 x 1 hex. head
16	102635	2	NUT .. Valve mounting - 3/8-16 hex.
17	8094740	1	SWITCH .. Temperature control - See P. L. 5507
18	100751	2	SCREW .. Switch mounting - 8-32 x 1/2 round head
19	106496	2	WASHER .. Lock - No. 8
20	8004922	1	UNLOADER .. Air compressor - See P. L. 1127
21	179881	2	BOLT .. Unloader mounting - 1/2-13 x 1 hex. head
22	8038643	2	BUSHING .. Insulating - 1/2
23	8038584	1	NUT .. Lock - 1/2
24	8181081	1	CLAMP .. Pipe
25	8108110	3	CLAMP .. Tube
26	8108111	5	CLAMP .. Tube
27	8108112	2	CLAMP .. Tube
28	8081819	1	CLAMP .. Air filter
29	8175915	1	FILTER .. Air - Fabricated type - See P. L. 1073
29A	8004170	A R	FILTER .. Air - Cast type - Optional - See P. L. 1073
30	8078817	1	COCK .. Cut-out - 1/4 P.T.
31	8049074	1	VALVE .. Globe - 1/4 P.T.
32	118750	2	CONNECTOR .. 3/8 tube x 1/4 M.P.T.
33	8040317	1	CONNECTOR .. 1/2 tube x 1/4 M.P.T.
34	144045	1	BUSHING .. Reducing - 1/2 P.T. x 1/4 P.T.
35	8044166	1	ELBOW .. Union - 1/4 P.T.
36	118755	1	ELBOW .. 3/8 tube x 1/4 M.P.T.
37	8039159	1	ELBOW .. 3/8 tube x 3/8 M.P.T.
38	118756	1	ELBOW .. 3/8 tube x 1/4 F.P.T.
39	8040350	1	ELBOW .. 3/8 tube x 3/8 F.P.T.
40	8042832	1	TEE .. 1/4 P.T.
41	118760	1	TEE .. 3/8 tube x 3/8 tube x 1/4 M.P.T.

8207002

Ref. No.	Part Number	No. Req.	Description
42	8040338	1	CAP .. Tube - 3/8
43	8060972	1	NIPPLE .. Short - Pipe - 3/8 P.T.
44	8060971	2	NIPPLE .. Short - Pipe - 1/4 P.T.
45	8119855	1	NIPPLE .. Pipe - 1/4 P.T. x 2-1/2 in. lg.
46	8119856	1	NIPPLE .. Pipe - 1/4 P.T. x 3 in. lg.
47	118539	8	NUT .. Flared tube - 3/8
48	118541	2	NUT .. Flared tube - 1/2
49	8144125	1	HOSE .. Air - 5/16 I.D. - With connections - 10 in. lg.
50	- - - -	A	TUBING .. Copper - 3/8 O.D. - Approximately 18 ft. required -
		R	Available 25 ft. - 8116856
51	- - - -	A	TUBING .. Copper - 1/2 O.D. - Approximately 4 ft. required -
		R	Available 50 ft. - 8116730

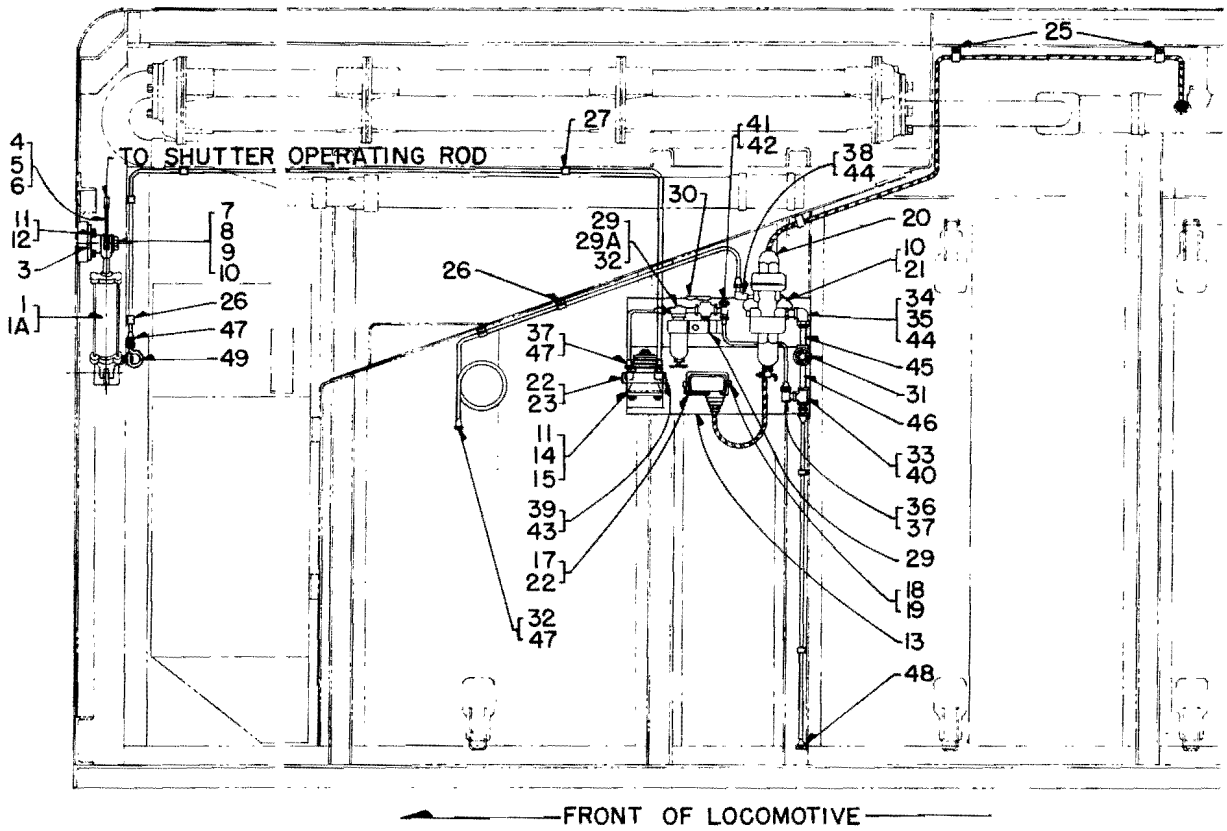

SHUTTER OPERATING MECHANISM
SW600, SW900, SW1200 LOCOMOTIVES

PLATE A530-2

P. L. No. D530

AUTOMATIC SHUTTER AND OPERATING MECHANISM

SHUTTER ASSEMBLY

PLATE C530-3

Ref. No.	Part Number	Number Required				Description
		X	-	-	-	SW1
		-	X	-	-	NW2
		-	-	X	-	SW7
		-	-	-	X	SW8,SW9,SW600,SW900,SW1200
* 1	8151249	-	-	1	-	SHUTTER ASSEMBLY
* 1A	8163095	-	-	-	1	SHUTTER ASSEMBLY
2	8151242	-	-	1	-	FRAME .. Shutter - Includes top and bottom bearing bars
2	8163094	-	-	-	1	FRAME .. Shutter - Includes top and bottom bearing bars
3	8151237	-	-	1	1	BAR .. Bearing - Top
4	180081	-	-	9	9	BOLT .. Bearing bar to frame - 5/16-18 x 1-1/4 hex. head
5	120214	-	-	9	9	WASHER .. Lock - 5/16
6	8151204	-	-	8	8	BLADE .. Shutter
7	8008851	-	-	8	8	BUSHING .. Blade clip
8	8008852	-	-	8	8	RING .. Bushing retaining
9	8010028	-	-	8	8	BOLT .. 5/16-18 x 1 hex. head
10	8032742	-	-	8	8	NUT .. 5/16-18 hex.
11	8151246	-	-	2	2	STOP .. Blade
12	8150890	-	-	1	1	LINK .. Shutter
13	8150893	-	-	1	1	ROD .. Operating - 1/2-20 x 18-1/2 in. long
14	8162109	-	-	1	1	JOINT .. Ball - Stud portion 1-1/8 in. lg.
15	114496	-	-	2	2	NUT .. Jam - 1/2-20 - Replaces 122295
16	8151664	-	-	1	1	JOINT .. Ball - Stud portion 3/4 in. long
*17	103323	-	-	1	1	WASHER .. Lock - Ball joint to shutter link - 1/2
18	8150856	-	-	1	-	FRAME .. Screen - Includes screen
18	8163280	-	-	-	1	FRAME .. Screen - Includes screen
19	8150898	-	-	1	-	SHROUD .. Shutter
19	8163399	-	-	-	1	SHROUD .. Shutter
20	106329	-	-	40	-	BOLT .. Shutter to hood - 3/8-16 x 3/4 hex. head
20	179835	-	-	-	24	BOLT .. Screen frame to shroud - 3/8-16 x 3/4 hex. head - Replaces 100133
21	103321	-	-	40	24	WASHER .. Lock - 3/8
*22	8133131	1	-	-	-	SHUTTER ASSEMBLY
*23	8125691	-	1	-	-	SHUTTER ASSEMBLY .. Operating bar located above blades instead of below as illustrated
*24	8109690	1	1	-	-	FRAME .. Shutter - Includes bottom bearing bar
25	8024762	22	-	-	-	BLADE .. Shutter
*26	8032897	-	22	-	-	BLADE .. Shutter
27	8008851	22	22	-	-	BUSHING .. Blade clip
28	8008852	22	22	-	-	RING .. Bushing retaining
29	8010028	22	22	-	-	BOLT .. 5/16-18 x 1 hex. head
30	103320	22	-	-	-	WASHER .. Lock - 5/16
31	102634	-	22	-	-	NUT .. 5/16-18 hex. - Replaces 174845
32	8024759	1	1	-	-	BAR .. Operating
33	8024779	1	1	-	-	BAR .. Top bearing
34	114668	12	12	-	-	BOLT .. Top bearing bar to shutter frame - 3/8-16 x 5/8 hex. hd.
35	8109488	1	1	-	-	FRAME .. Screen - Includes screen
*36	114668	4	4	-	-	BOLT .. Screen frame to hood - 3/8-16 x 5/8 hex. head
37	180121	16	16	-	-	BOLT .. Screen and shutter frame to hood - 3/8-16 x 7/8 hex. head - Replaces 122126
38	103321	16	16	-	-	WASHER .. Lock - 3/8

8024837 8032954 8150938 8163534

P. L. No. D530

AUTOMATIC SHUTTER AND OPERATING MECHANISM

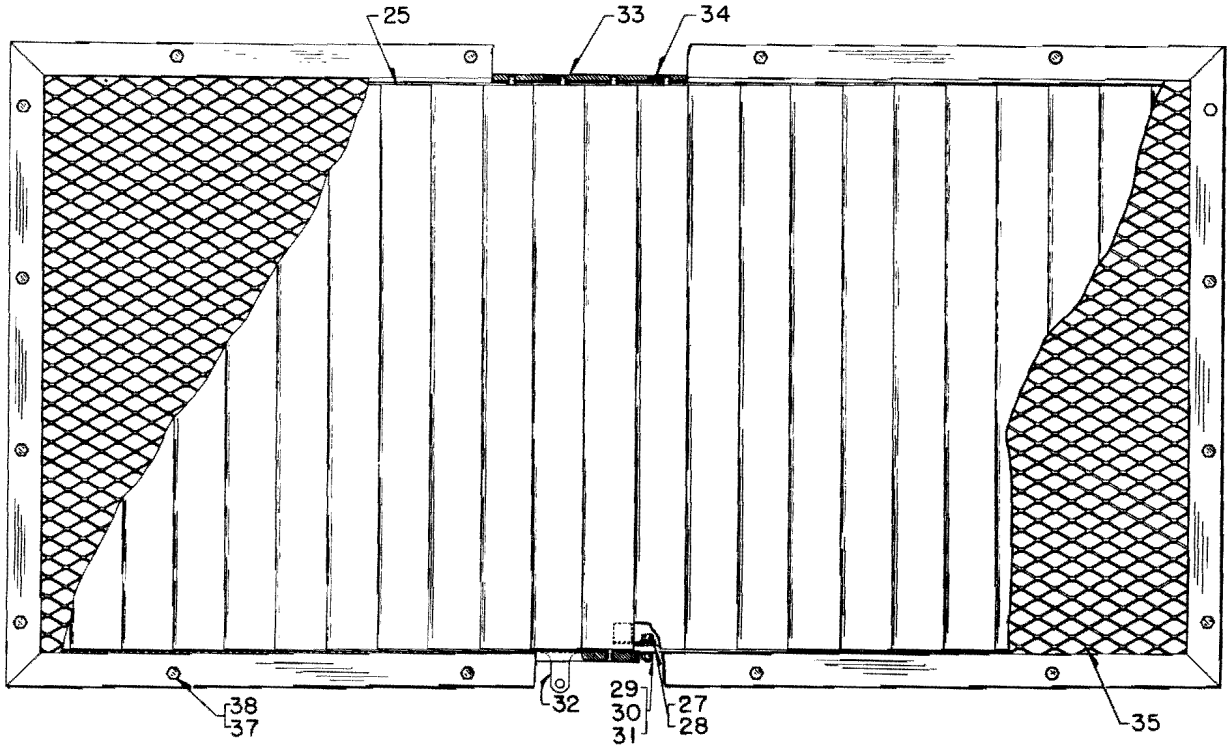

SW1, NW2 LOCOMOTIVES

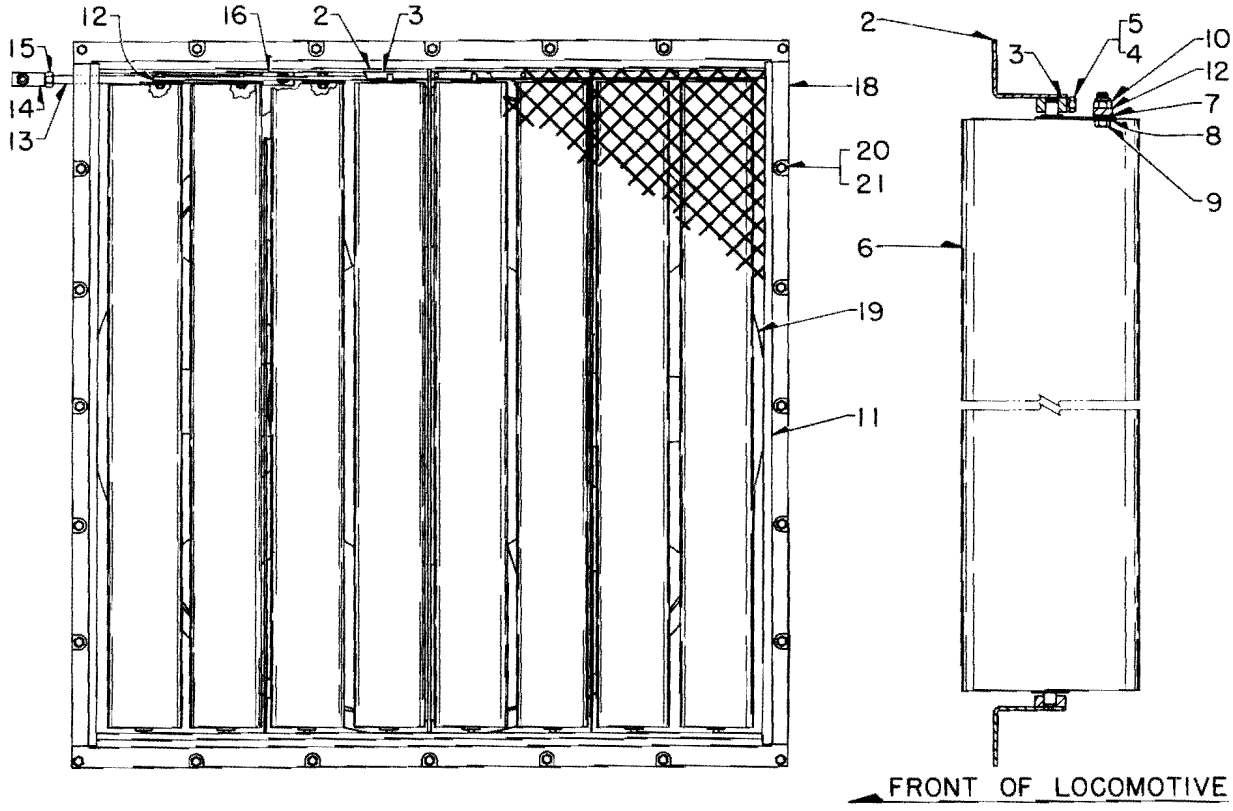

SW7, SW8, SW9, SW600, SW900, SW1200 LOCOMOTIVES

SHUTTER ASSEMBLY
PLATE D530-3

Parts List No. A531

SHUTTER OPERATING MECHANISM

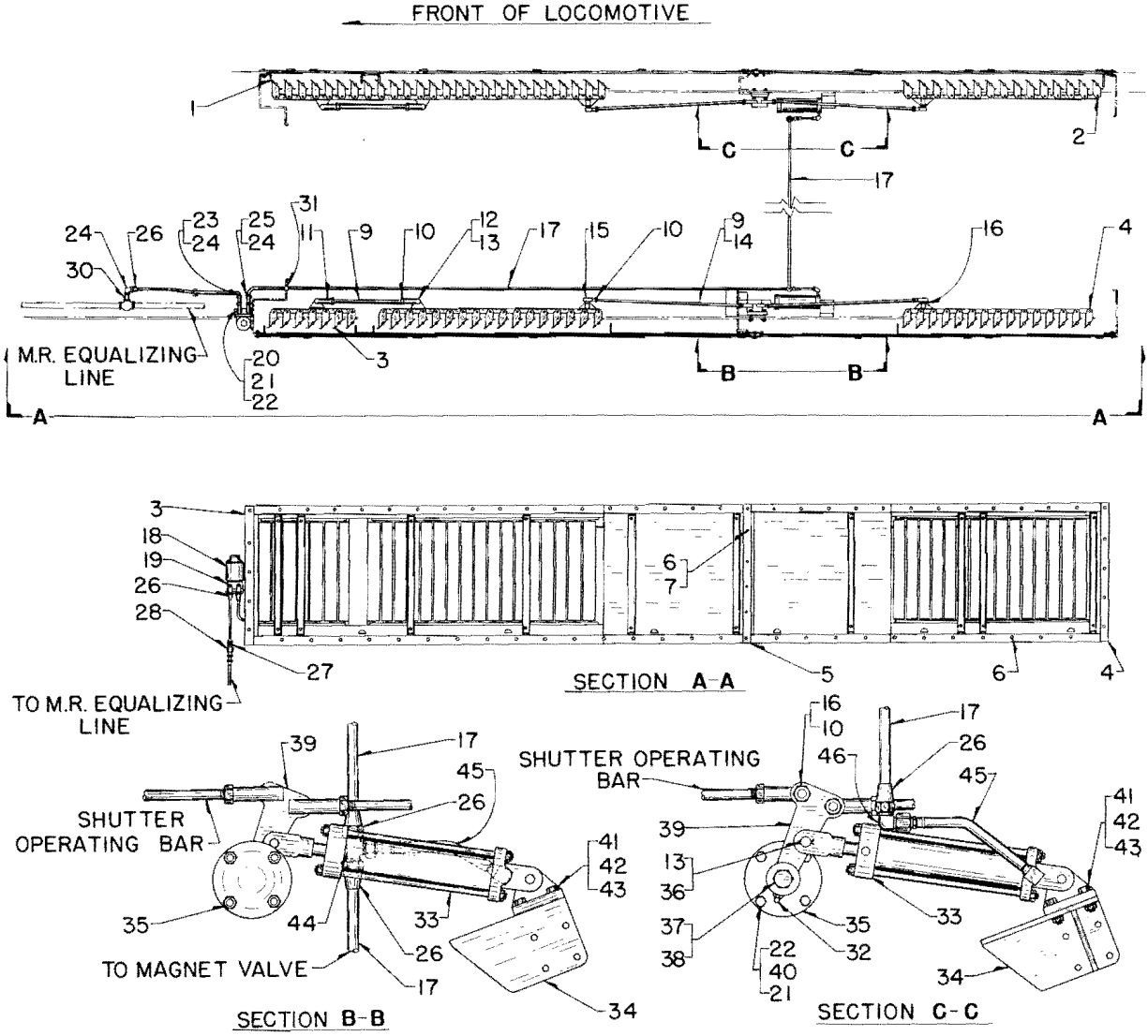

PLATE A531-1

Ref. No.	Part Number	No. Req.		Description
	- - - -	X	-	F2 and F3 locomotives with shutter blades graduated in one corner of shutter frame assembly
	- - - -	-	X	F3 and F7 locomotives with equal size shutter blades throughout shutter frame (As illustrated)
1	8091042	1	-	SHUTTER .. Assembly - See Plate 531-2
1	8136528	-	1	SHUTTER .. Assembly - See Plate 531-4
2	8091145	1	-	SHUTTER .. Assembly - See Plate 531-3
2	8136530	-	1	SHUTTER .. Assembly - See Plate 531-5
3	8091101	1	-	SHUTTER .. Assembly - See Plate 531-2
3	8136526	-	1	SHUTTER .. Assembly - See Plate 531-4

8092053 8136534

P.L. No. A531

SHUTTER OPERATING MECHANISM

Ref. No.	Part Number	No. Req.		Description
	- - - -	X	-	F2 and F3 locomotives with shutter blades graduated in one corner of shutter frame assembly
	- - - -	-	X	F3 and F7 locomotives with equal size shutter blades throughout shutter frame (As illustrated)
4	8091458	1	-	SHUTTER .. Assembly - See Plate 531-3
4	8136532	-	1	SHUTTER .. Assembly - See Plate 531-5
5	8091839	2	-	STRIP .. Center (1-1/2 Inches x 28-11/16 Inches long)
5	8136708	-	2	STRIP .. Center (1-1/2 Inches x 28-5/8 Inches long)
6	8129472	152	140	BOLT .. Cross recess (5/16-18 x 1-1/2 Inches long) (Replaces 157788 Bolt)
7	156477	-	8	SCREW .. Slotted machine
8	8135324	152	-	NUT .. Self-locking (5/16-18) (Replaces 8042959 Nut)
9	8090039	6	2	BAR .. Operating
10	117051	16	16	NUT .. Hexagon
11	104039	4	4	CLEVIS .. Operating bar
12	114787	4	4	PIN .. Clevis
13	108630	6	6	PIN .. Cotter
14	8136505	-	4	BAR .. Operating
15	109419	8	8	BALL JOINT .. Operating bar
16	103323	8	8	WASHER .. Lock
17	8023252	A.R.	A.R.	TUBING .. Copper (1/2 Inch tube - 26 Feet required)
18	8003765	1	1	VALVE .. Air magnet - See Parts List 4702
19	8099434	1	1	BRACKET .. Air magnet valve
20	106332	2	2	BOLT .. Hexagon head
21	103321	10	10	WASHER .. Lock
22	117062	10	10	NUT .. Hexagon
23	144608	1	1	NIPPLE .. Pipe
24	120142	4	3	ELBOW .. Flared tube
25	8117624	1	1	VENTURI .. (3/8 P.T.)
26	118541	10	10	NUT .. Flared tube
27	8040317	2	2	CONNECTOR .. Flared tube (1/2 Tube x 1/4 M.P.T.)
28	8078817	1	1	COCK .. Cutout (1/4 P.T.)
*29	8090488	1	1	GROMMET .. Copper (Located in floor plate)
30	120146	1	1	NIPPLE .. Pipe
31	117961	1	1	GROMMET .. Rubber
32	109461	2	2	FITTING .. Zerk grease (1/8 P.T.)
33	8080170	2	2	CYLINDER ASSEMBLY .. Shutter operating - See Plate 531-6
34	8091829	2	2	BRACKET .. Shutter operating piston - Replaces 1-8097955 Bracket)
35	8080215	2	2	BRACKET .. Lever
36	8022111	2	2	PIN .. Clevis (1/2 x 1-11/16 Inches long)
37	8091139	2	2	BOLT .. Hexagon - Operating bar lever to bracket
38	8022377	2	2	WASHER .. Special (3/4 I.D. x 1/4 Thick)
39	8091138	2	2	LEVER .. Operating bar bracket
40	106331	8	8	BOLT .. Hexagon - Operating bar lever bracket
41	100123	8	8	BOLT .. Hexagon head
42	103320	8	8	WASHER .. Lock
43	117061	8	8	NUT .. Hexagon
44	118809	1	1	TEE .. Flared tube (Replaces 118762 and 144299 Tee)
45	8144125	2	2	HOSE ASSEMBLY .. (Replaces 2-8095421 Hose, 4-8098570 Connectors, 2-179547 Reducing elbows and 1-144076 Cplg.)
46	118814	1	1	ELBOW .. Flared tube
*47	8092649	2	-	SHUTTER .. Assembly (Located top row of panels rear F2 locomotive only) See Plate 531-7

SHUTTER ASSEMBLIES
PART NO. 8091042 AND 8091101

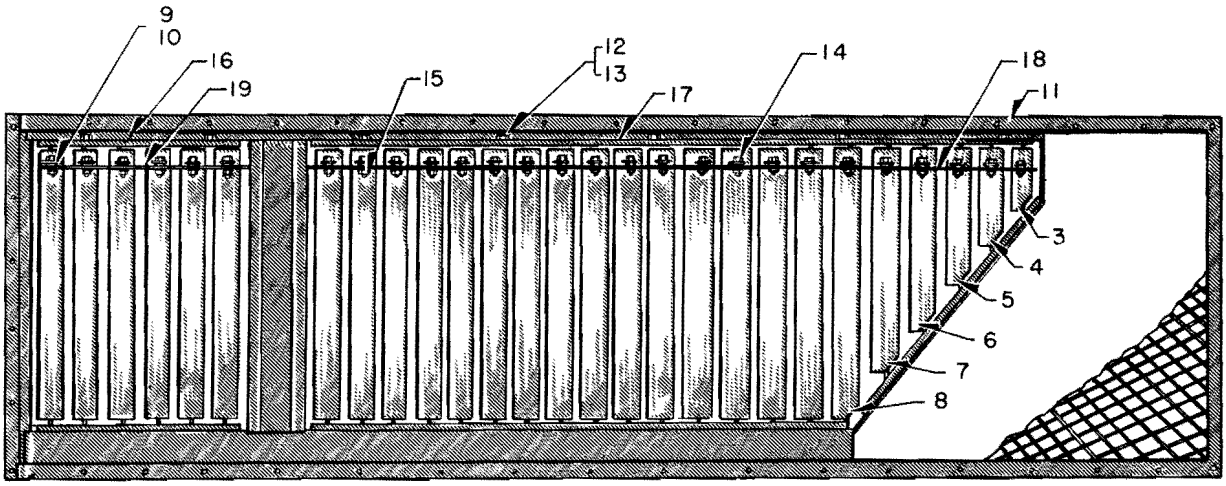

PLATE A531-2

Ref. No.	Part Number	No. Req.		Description
* 1	8091042	X	-	SHUTTER .. Assembly - From Plate 531-1, Ref. 1 (R.S. of loco.)
* 2	8091101	-	X	SHUTTER .. Assembly - From Plate 531-1, Ref. 3 (L.S. of loco.)
3	8090693	1	-	BLADE .. Shutter
3	8085083	-	1	BLADE .. Shutter
4	8090692	1	-	BLADE .. Shutter
4	8085082	-	1	BLADE .. Shutter
5	8090691	1	-	BLADE .. Shutter
5	8085081	-	1	BLADE .. Shutter
6	8085086	1	-	BLADE .. Shutter
6	8085080	-	1	BLADE .. Shutter
7	8090690	1	-	BLADE .. Shutter
7	8085079	-	1	BLADE .. Shutter
8	8084874	22	-	BLADE .. Shutter
8	8084941	-	22	BLADE .. Shutter
9	8008851	22	22	BUSHING .. Shutter blade (Located in shutter blade clip)
10	8008852	22	22	RING .. Bushing (Retains bushing on clip)
11	8090991	1	-	FRAME .. Shutter (Includes screen and bottom bearing bars)
11	8090981	-	1	FRAME .. Shutter (Includes screen and bottom bearing bars)
12	103321	7	7	WASHER .. Lock
13	100133	7	7	SCREW .. Cap - Top bearing bar to shutter frame
14	8010028	27	27	BOLT .. Hexagon head (5/16-18 x 1) Shutter blade to operating bar
15	8031736	27	27	NUT .. Hexagon grip (5/16-18)
16	8090151	1	1	BAR .. Top bearing (Short)
17	8090132	1	1	BAR .. Top bearing (Long)
18	8084799	1	1	BAR .. Shutter operating (Long)
19	8084958	1	1	BAR .. Shutter operating (Short)

8091042 8091101

P.L. No. A531

SHUTTER ASSEMBLIES
PART NO. 8091145 AND 8091458

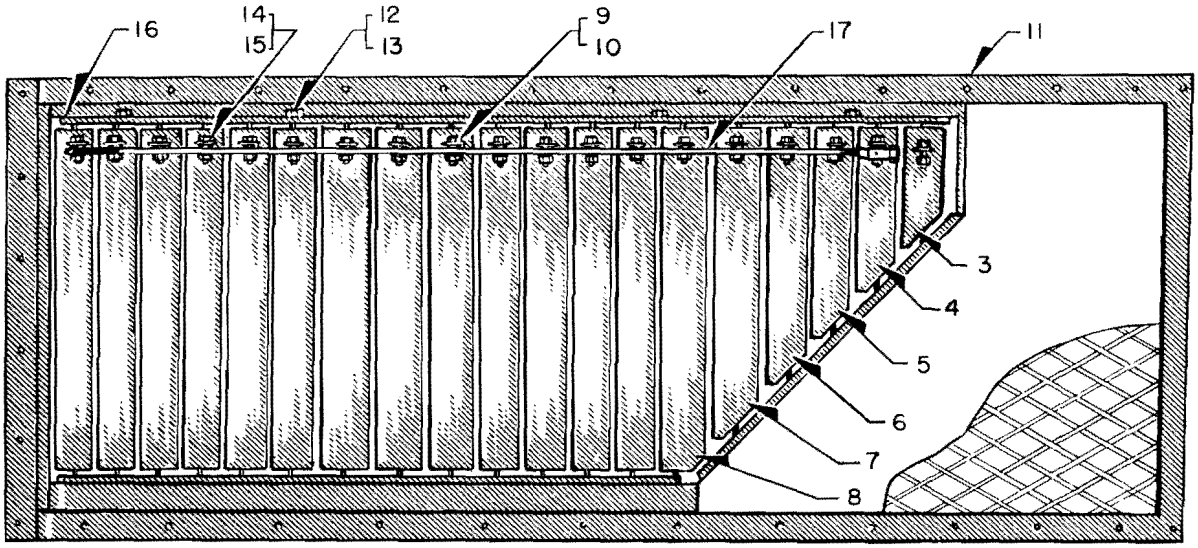

PLATE A531-3

Ref. No.	Part Number	No. Req.		Description
* 1	8091145	X	-	SHUTTER .. Assembly - From Plate 531-1, Ref. 2 (R.S. of loco.)
* 2	8091458	-	X	SHUTTER .. Assembly - From Plate 531-1, Ref. 4 (L.S. of loco.)
3	8085068	1	-	BLADE .. Shutter
3	8085090	-	1	BLADE .. Shutter
4	8085066	1	-	BLADE .. Shutter
4	8085089	-	1	BLADE .. Shutter
5	8085067	1	-	BLADE .. Shutter
5	8085088	-	1	BLADE .. Shutter
6	8085071	1	-	BLADE .. Shutter
6	8085087	-	1	BLADE .. Shutter
7	8085078	1	-	BLADE .. Shutter
7	8085085	-	1	BLADE .. Shutter
8	8084874	14	-	BLADE .. Shutter
8	8084941	-	14	BLADE .. Shutter
9	8008851	19	19	BUSHING .. Shutter blade (Located in shutter blade clip)
10	8008852	19	19	RING .. Bushing (Retains bushing on clip)
11	8085131	1	-	FRAME .. Shutter (Includes screen and bottom bearing bars)
11	8090767	-	1	FRAME .. Shutter (Includes screen and bottom bearing bars)
12	103321	5	5	WASHER .. Lock
13	100133	5	5	SCREW .. Cap - Top bearing bar to shutter frame
14	8010028	19	19	BOLT .. Hexagon head (5/16-18 x 1) Shutter blade to operating bar
15	8031736	19	19	NUT .. Hexagon grip (5/16-18)
16	8084999	1	1	BAR .. Top bearing
17	8090024	1	1	BAR .. Shutter operating

8091145 8091458

P.L. No. A531

SHUTTER ASSEMBLIES
PART NO. 8136526 AND 8136528

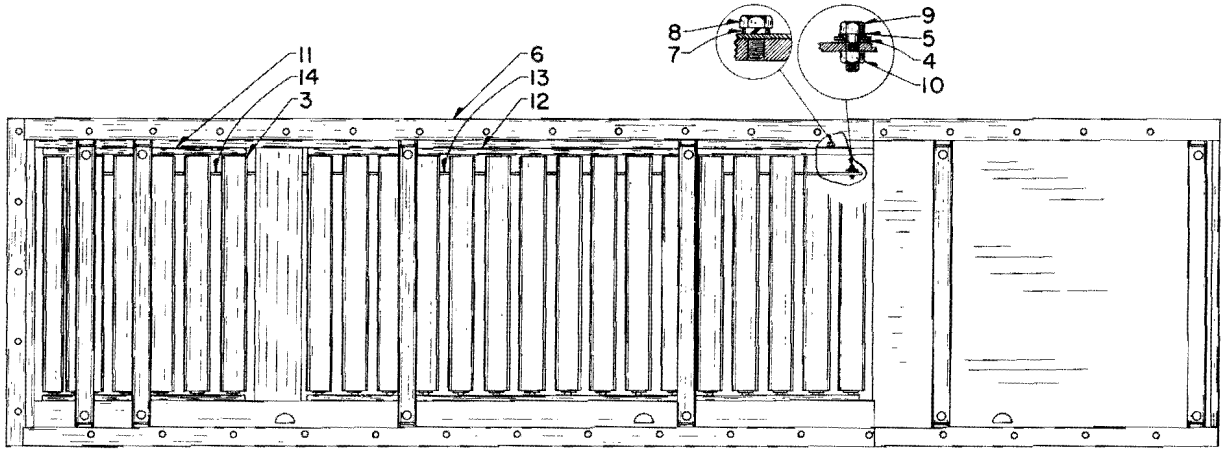

PLATE A531-4

Ref. No.	Part Number	No. Req.		Description
* 1	8136526	X	-	SHUTTER .. Assembly - From Plate 531-1, Ref. 3 (L.S. of loco.)
* 2	8136528	-	X	SHUTTER .. Assembly - From Plate 531-1, Ref. 1 (R.S. of loco.)
3	8084941	22	-	BLADE .. Shutter
3	8084874	-	22	BLADE .. Shutter
4	8008851	22	22	BUSHING .. Shutter blade (Located in shutter blade clip)
5	8008852	22	22	RING .. Bushing (Retains bushing on clip)
6	8136527	1	-	FRAME .. Shutter (Includes bottom bearing bars)
6	8136529	-	1	FRAME .. Shutter (Includes bottom bearing bars)
7	103321	6	6	WASHER .. Lock
8	100133	6	6	SCREW .. Cap - Top bearing bar to shutter frame
9	8010028	22	22	BOLT .. Hexagon head (5/16-18 x 1) Shutter blade to operating bar
10	8031736	22	22	NUT .. Hexagon grip (5/16-18)
11	8090151	1	1	BAR .. Top bearing (17 Inches long)
12	8136525	1	1	BAR .. Top bearing (47 Inches long)
13	8136394	1	1	BAR .. Shutter operating (46 Inches long)
14	8084958	1	1	BAR .. Shutter operating (16 Inches long)

8136526 8136528

P.L. No. A531

SHUTTER ASSEMBLIES
PART NO. 8136530 AND 8136532

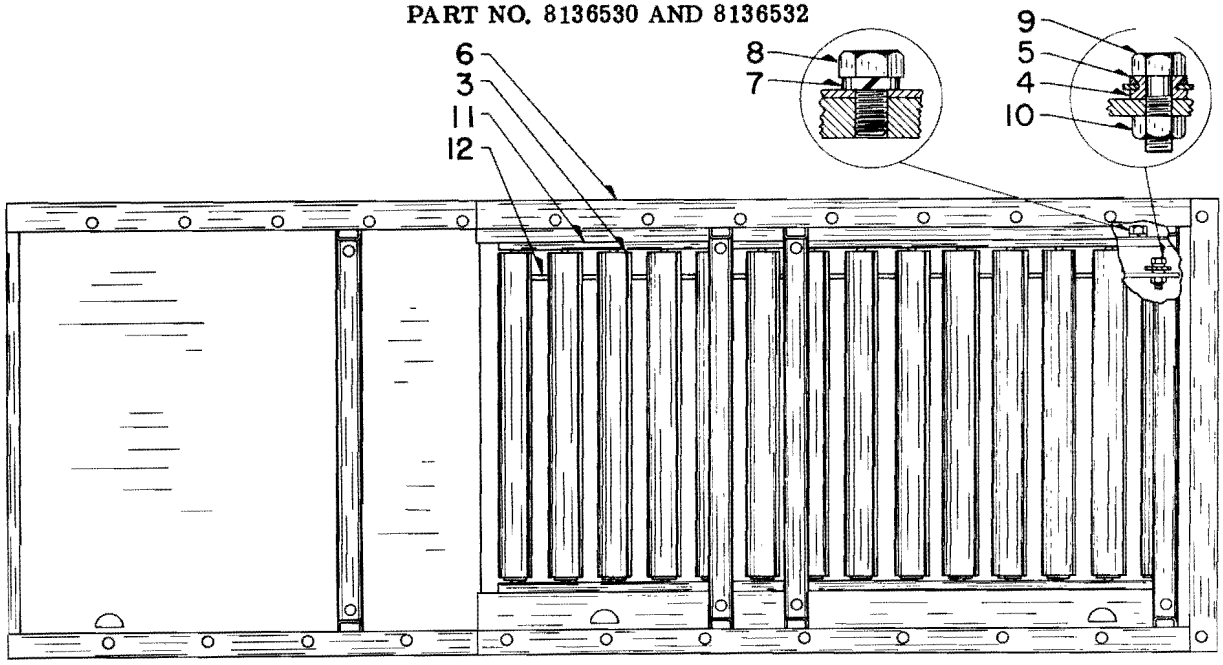

PLATE A531-5

Ref. No.	Part Number	No. Req.		Description
* 1	8136530	X	-	SHUTTER .. Assembly - From Plate 531-1, Ref. 2 (R.S. of loco.)
* 2	8136532	-	X	SHUTTER .. Assembly - From Plate 531-1, Ref. 4 (L.S. of loco.)
3	8084874	14	-	BLADE .. Shutter
3	8084941	-	14	BLADE .. Shutter
4	8008851	14	14	BUSHING .. Shutter blade (Located in shutter blade clip)
5	8008852	14	14	RING .. Bushing (Retains bushing on clip)
6	8136531	1	-	FRAME .. Shutter (Includes bottom bearing bar)
6	8136533	-	1	FRAME .. Shutter (Includes bottom bearing bar)
7	103321	4	4	WASHER .. Lock
8	100133	4	4	SCREW .. Cap - Top bearing bar to shutter frame
9	8010028	14	14	BOLT .. Hexagon head (5/16-18 x 1) Shutter blade to operating bar
10	8031736	14	14	NUT .. Hexagon grip (5/16-18)
11	8136340	1	1	BAR .. Top bearing
12	8136341	1	1	BAR .. Shutter operating

8136530 8136532

P.L. No. A531

SHUTTER OPERATING CYLINDER ASSEMBLY
PART NO. 8080170

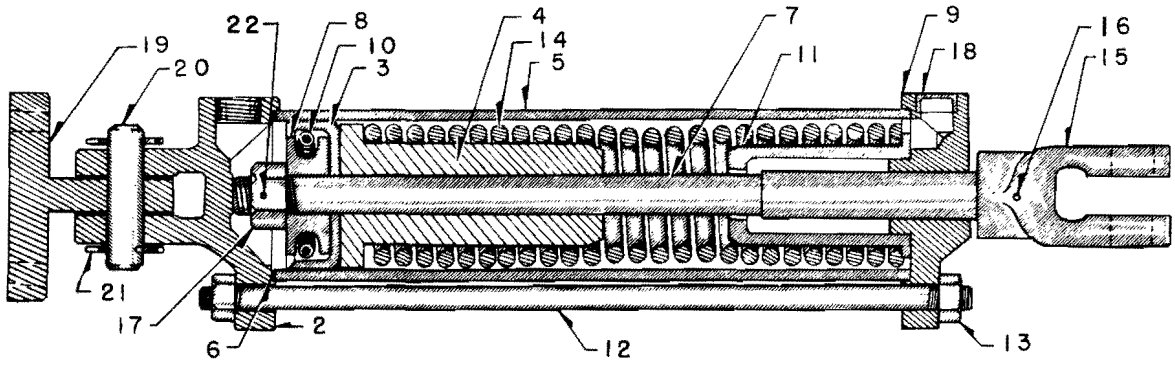

PLATE A531-6

Ref. No.	Part Number	No. Req.	Description
* 1	8080170	X	CYLINDER ASY. .. Shutter operating - From Plate 531-1, Ref. 33
2	8110175	1	HEAD .. Back
3	8110176	1	PACKING .. Piston
4	8110177	1	PISTON .. Shutter operating
5	8110178	1	CYLINDER .. Shutter operating
6	8110179	1	GASKET .. Back head
7	8110180	1	ROD .. Piston
8	8110181	1	FOLLOWER
9	8110182	1	HEAD .. Front
10	8110183	1	SPRING .. Packing
11	8110184	1	GUIDE .. Spring
12	8110185	4	ROD .. Tie
13	117061	8	NUT .. Hexagon - Tie rod
14	8110187	1	SPRING .. Shutter operating piston
15	8110188	1	CLEVIS .. Piston rod
16	8110189	1	PIN .. Groove (1/8 Inch diameter x 1-1/4 Inches long)
17	117063	1	NUT .. Hexagon - Piston rod
18	8110191	1	PLUG .. Screen (1/2 Inch diameter - #40 Mesh screen)
19	8110192	1	BRACKET .. Back head
20	8110193	1	PIN .. Clevis (1/2 Inch diameter x 1-7/8 Inches long)
21	137185	2	PIN .. Cotter
22	137204	1	PIN .. Cotter - Piston rod nut

8080170

P.L. No. A531

SHUTTER ASSEMBLY
PART NO. 8092649

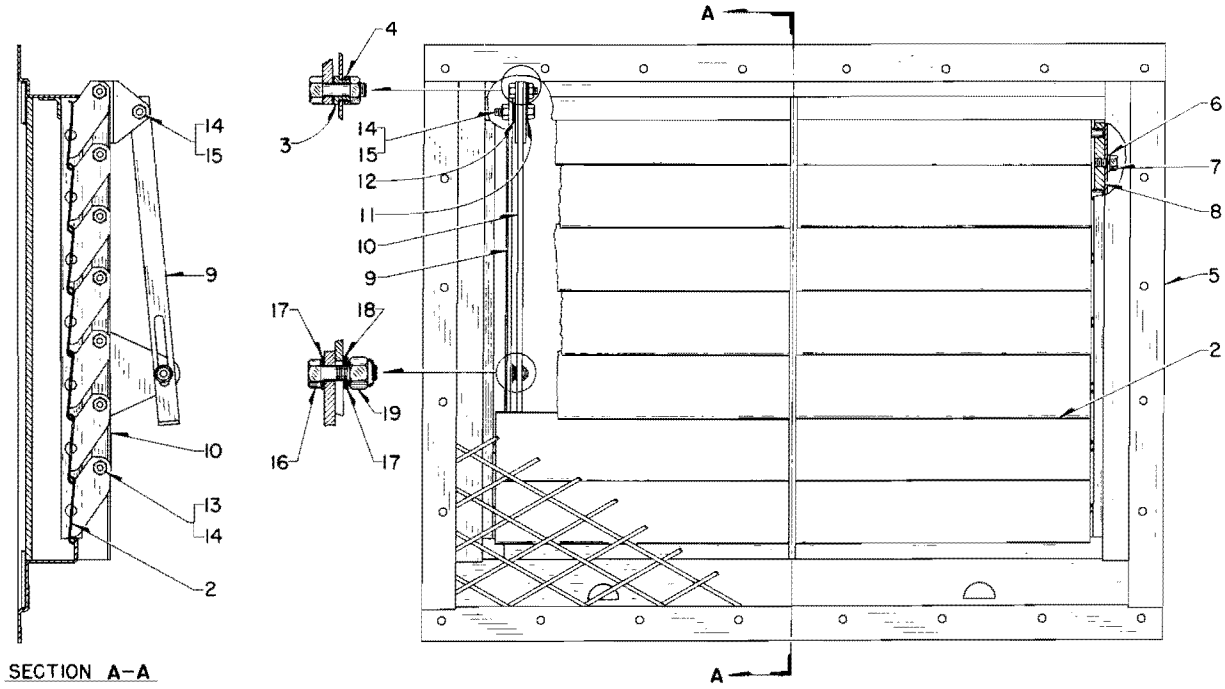

SECTION A-A

PLATE A531-7

Ref. No.	Part Number	No. Req.	Description
* 1	8092649	X	SHUTTER .. Assembly (Located in top row of panels on F2 locomotive only) From Plate 531-1, Ref. 47
2	8098623	7	BLADE .. Shutter
3	8008851	7	BUSHING .. Shutter blade (Located in shutter blade clip)
4	8008852	7	RING .. Bushing (Retains bushing on clip)
5	8098614	1	FRAME .. Shutter (Includes screen and bearing bar)
6	120382	2	WASHER .. Lock
7	122104	2	SCREW .. Cap - Shutter frame to bearing bar
8	8104603	1	BAR .. Shutter bearing (Includes shutter shield)
9	8098625	1	LEVER .. Operating
10	8098834	1	BAR .. Operating lever
11	8008852	1	RING .. Bushing
12	8098627	1	BUSHING .. Operating lever bar
13	8010028	7	BOLT .. Hexagon head - Shutter blade to operating bar (5/16-18 x 1)
14	8031736	8	NUT .. Hexagon grip (5/16-18)
15	8099454	1	BOLT .. Hexagon head (5/16-18 x 1-3/8)
16	122145	1	BOLT .. Hexagon head - Shutter frame to operating lever
17	8098798	2	WASHER .. Spring
18	120394	1	WASHER .. Plain
19	8032759	1	NUT .. Elastic stop

8092649

Parts List No. H532

ENGINE WATER COOLING RADIATOR ASSEMBLIES

LOCOMOTIVE ALTERNATE RADIATOR REFERENCE CHART

Ref. No.	Radiator Assembly With Harrison Cores		Radiator Assembly With Young Cores		Locomotive Model	Page No.
	Radiator Part No.	Core Part No.	Radiator Part No.	Core Part No.		
1 2 3 4	8021882 8107997 8081921 8081777	3129239	- - - - - - - - - - - - - - - -	8127126	E3, E4, E5, E6, E7	2
5 6	8144123 8144124	3129239	8172439 8172438	8127126	E6	3
7 8	8209403 8209404	3129131	8209405 8209406	8206685	E9	4
9 10	8081183 8081182	3129239	8172441 8172440	8127126	F2, F3, F7, FP7	5
11 12	8194725 8194726	3129131	8209529 8209530	8206685	F9, FL9, FP9	6
13 14	8172435 8172436 8173437	3129239	8148145 8148146 8148147	8127126	GP7	7
15 16 17 18	8209590 8209591 8189351 8189352	3129131	8209438 8209439 8209071 8209072	8206685	GP9	8
19 20	8291433 8291530	3129131	8291805 8291804	8206685	RS1325	9
21 22	8182997 8182996	3129239	8178698 8178697	8127126	SD7	10
23 24	8208769 8208770	3129131	8210319 8210318	8206685	SD9	11
25 26	8025065 8107899	3129239	8135928 8135927	8127126	NW2, SW7, TR2, TR3, TR4	12
27 28	8170880 8170879	3129239	8135728 8135729	8127126	SW1	13
29 30	8170244 8170245	3129239	8165234 8165235	8127126	SW9, SW600, SW900 SW1200, TR5, TR6, TR9	14

P. L. No. H532

ENGINE WATER COOLING RADIATOR ASSEMBLIES

RADIATOR ASSEMBLIES WITH 4 INCH COOLING CORE
E3, E4, E5, E6 and E7 LOCOMOTIVES

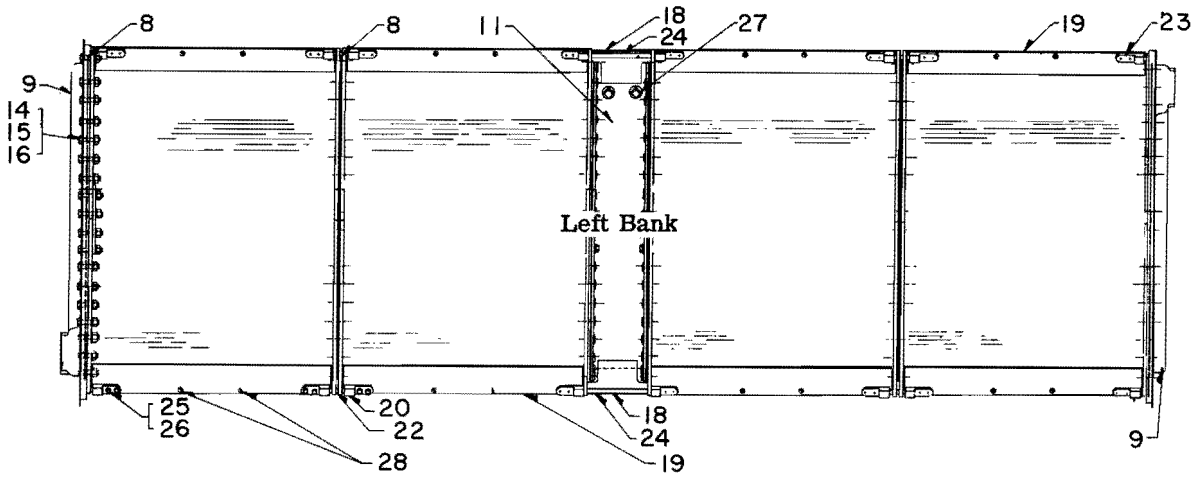

PLATE G532-1

Ref. No.	Part Number	No. Req.	Description		Replaced By	Loco. Model
* 1	8021882	A	RADIATOR ASY. .. L. B. Front	R. B. Rear	8081921	E3, E4, E5, E6
* 2	8107997	B	RADIATOR ASY. .. R. B. Front	L. B. Rear	8081777	E3, E4, E5, E6
* 3	8081921	C	RADIATOR ASY. .. L. B. Front	R. B. Rear		E7
* 4	8081777	D	RADIATOR ASY. .. R. B. Front	L. B. Rear		E7

Quantities listed are for one assembly.

* 5	3129239	4	CORE .. Radiator cooling
* 6	8081189	8	PLATE .. Clamp - Formerly 8018934
* 7	8099716	8	PLATE ASSEMBLY .. Clamp - Formerly 8021890
8	8018975	6	GASKET .. Core to core and header
9	8132721	2	HEADER ASY. .. Inlet and outlet - Replaces 8021393
*10	8018362	28	STUD .. Header mounting - 1/2-2-3/8 in. long
11	8132720	1	HEADER ASY. .. Cooling core - Replaces 8021889
*12	8018362	4	STUD .. Adapter mounting - 1/2-2-3/8 in. long
*13	8177725	1	SCREEN ASSEMBLY .. Inlet
14	179887	208	BOLT .. Header and adapter mounting - 1/2-13 x 1-3/4 hex. head
15	102637	240	NUT .. Machine - 1/2-13 hex.
16	103323	240	WASHER .. Lock - 1/2
*17	8021395	2	GASKET .. Header to pipe flange
18	8021883	4	PLATE .. Center baffle
19	8021884	16	PLATE .. Baffle
20	8021885	24	BLOCK .. Pin
*21	8021887	4	SHEET .. End closing
22	8021888	8	PIN .. Mounting
23	8022337	8	BLOCK .. End pin
24	8105218	4	PIN .. Mounting
25	179831	64	BOLT .. Pin block mounting - 3/8-16 x 1 hex. head
26	103321	64	WASHER .. Lock - 3/8
27	103368	4	PLUG .. Pipe - 3/4 P. T.
28	171482	68	SCREW .. Tapping - 10-24 x 1/2 Rd. head

ENGINE WATER COOLING RADIATOR ASSEMBLIES

RADIATOR ASSEMBLIES WITH 4 INCH COOLING CORE
E8 LOCOMOTIVE

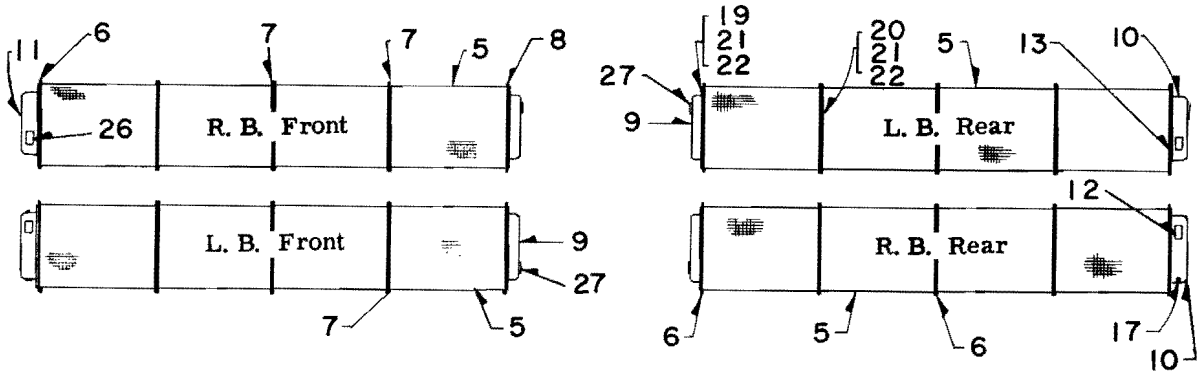

No. 1 ENGINE

No. 2 ENGINE

PLATE G532-2

Ref. No.	Part Number	No. Req.		Description
*1	8144123	A	-	RADIATOR ASY. .. R. B. Front - L. B. Rear - Alternate for 8172439
*2	8144124	A	-	RADIATOR ASY. .. L. B. Front - R. B. Rear - Alternate for 8172438
*3	8172439	-	B	RADIATOR ASY. .. R. B. Front - L. B. Rear - Alternate for 8144123
*4	8172438	-	B	RADIATOR ASY. .. L. B. Front - R. B. Rear - Alternate for 8144124
5	3129239	4	-	CORE .. Radiator cooling (Harrison)
5	8127126	-	4	CORE .. Radiator cooling (Young)
6	8018975	5	5	GASKET .. Core to core and header
7	8082980	8	8	PLATE .. Support
8	8081189	8	8	PLATE .. Clamp

Aluminum headers have been replaced by cast iron headers. To avoid electrolytic corrosion between dissimilar metals, use aluminum header plate 8196628 with aluminum headers and steel plate 8114089 with cast iron headers.

9	8167224	1	1	HEADER .. Outlet - Cast iron - Replaces 8132717 and 8081184
10	8167187	1	1	HEADER .. Inlet - Cast iron - Replaces 8143809 and 8148356
11	8081191	1	1	SCREEN ASSEMBLY .. Inlet
12	8081188	1	1	GASKET .. Gasket - Inlet header mounting
13	8114089	1	1	PLATE .. Inlet header - Steel
*14	8020713	1	1	STUD .. Plate mounting - 1/2-13 x 2-1/2 in. long
*15	116105	1	1	WASHER .. Plain - 1/2 I.D. - Copper
*16	8160543	1	1	NUT .. Acorn - 1/2-13
17	113176	1	1	PLUG .. Pipe - Inlet header - 1/2 P.T. - Brass
*18	109429	1	1	ELBOW .. Inlet header - 5/8 tube x 1/2 P.T. - Brass
19	179885	48	48	BOLT .. Header plate mounting - 1/2-13 x 1-1/2 hex. head
20	179887	176	176	BOLT .. Core to core mounting - 1/2-13 x 1-3/4 hex. head
21	102637	176	176	NUT .. Machine - 1/2-13 hex.
22	103323	224	224	WASHER .. Lock - 1/2

Aluminum headers 8132717 and 8143809 were furnished with studs Ref. No. 22 and 23.

*23	8022014	54	54	STUD .. Radiator header - 1/2-13 x 2-1/16 in. long
*24	8014701	10	10	STUD .. Radiator header - 1/2-13 x 2-3/4 in. long
*25	8196628	1	1	PLATE .. Inlet header - Used on aluminum header only
26	8081192	2	2	GASKET .. Inlet header to pipe flange
27	8024321	2	2	GASKET .. Outlet header to elbow

8148805

P. L. No. H532

ENGINE WATER COOLING RADIATOR ASSEMBLIES

RADIATOR ASSEMBLIES WITH 6 INCH COOLING CORE
E 9 LOCOMOTIVE

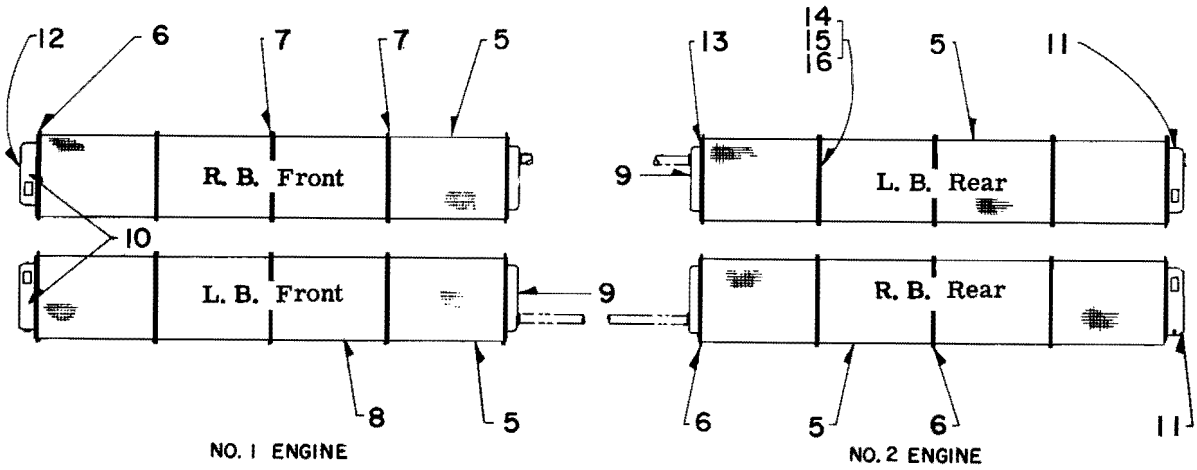

← FRONT OF LOCOMOTIVE

PLATE G532-3

Ref. No.	Part Number	Number Required				Description
*1	8209403	A	-	-	-	RADIATOR ASY. . . R. B. Front - L. B. Rear - Alternate for 8209405
*2	8209404	-	B	-	-	RADIATOR ASY. . . L. B. Front - R. B. Rear - Alternate for 8209406
*3	8209405	-	-	C	-	RADIATOR ASY. . . R. B. Front - L. B. Rear - Alternate for 8209403
*4	8209406	-	-	-	D	RADIATOR ASY. . . L. B. Front - R. B. Rear - Alternate for 8209404
5	3129131	4	4	-	-	CORE . . Radiator cooling (Harrison)
5	8206685	-	-	4	4	CORE . . Radiator cooling (Young)
6	8177379	6	6	6	6	GASKET . . Core to core and header
7	8094723	8	8	8	8	PLATE . . Radiator clamp
8	8094724	8	8	8	8	PLATE ASSEMBLY . . Radiator clamp - Includes support lug.
9	8189032	1	1	1	1	HEADER . . Outlet
10	8314535	1	-	1	-	HEADER . . Inlet
11	8314536	-	1	-	1	HEADER . . Inlet
12	8194269	1	1	1	1	SCREEN ASSEMBLY . . Inlet

The following components are applicable to Ref. Nos. 1 thru 4

13	179885	14	BOLT . . Header plate mounting - 1/2-13 x 1-1/2 hex. head
14	179887	186	BOLT . . Core to core mounting - 1/2-13 x 1-3/4 hex. head
15	102637	186	NUT . . Machine - 1/2-13 hex.
16	103323	200	WASHER . . Lock - 1/2
*17	8135185	2	ELBOW . . Water discharge to header outlet
*18	8081192	2	GASKET . . Elbow mounting to header outlet
*19	8126726	2	FLANGE . . Temperature switch bushing
*20	8088988	2	GASKET . . Flange mounting
*21	189069	2	BUSHING . . Temperature switch capillary tube mounting
*22	8135098	1	TEE . . Water discharge
*23	8147681	1	BRACKET ASSEMBLY . . Water discharge tee mounting
*24	8146490	1	GASKET . . Water discharge tee to mounting bracket
*25	8211845	1	ELBOW . . Flanged - Engine water discharge
*26	8280090	2	COUPLING . . Flexible - Tee and elbow connection
*27	8055261	4	GASKET . . Coupling mounting

P. L. No. H532

ENGINE WATER COOLING RADIATOR ASSEMBLIES

RADIATOR ASSEMBLIES WITH 4 INCH COOLING CORE
F2, F3, F7, FP7 LOCOMOTIVE

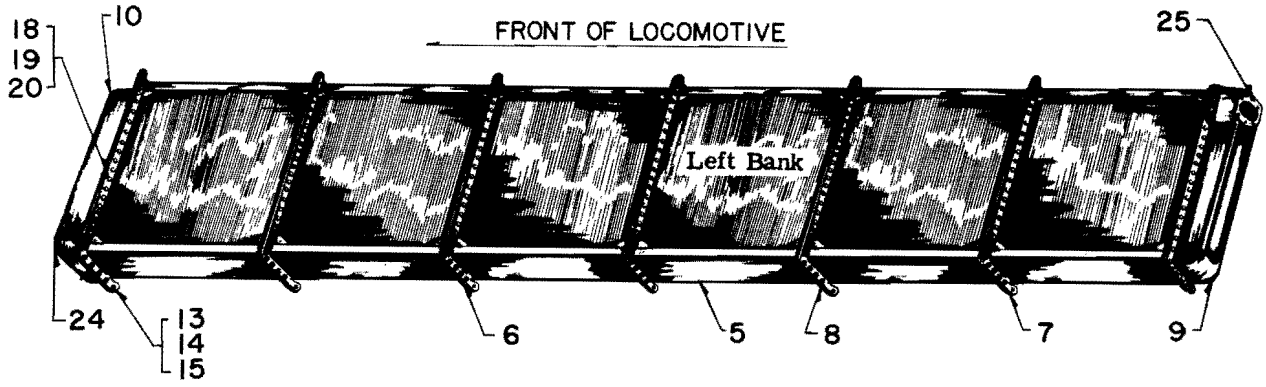

PLATE G532-4

Ref. No.	Part Number	No. Req.		Description
* 1	8081183	A	-	RADIATOR ASY. .. Left Bank - Alternate for 8172441
* 2	8081182	A	-	RADIATOR ASY. .. Right Bank - Alternate for 8172440
* 3	8172441	-	B	RADIATOR ASY. .. Left Bank - Alternate for 8081183
* 4	8172440	-	B	RADIATOR ASY. .. Right Bank - Alternate for 8081182
5	3129239	6	-	CORE .. Radiator cooling (Harrison)
5	8127126	-	6	CORE .. Radiator cooling (Young)
6	8018975	7	7	GASKET .. Core to core and header
7	8082980	12	12	PLATE .. Support
8	8081190	12	12	PLATE .. Clamp

Aluminum headers have been replaced by cast iron headers. To avoid electrolytic corrosion between dissimiliar metals, use aluminum header plate 8196628 with aluminum headers and steel plate 8114089 with cast iron header.

9	8167224	1	1	HEADER .. Outlet - Cast iron - Replaces 8132717
10	8167223	1	1	HEADER .. Inlet - Cast iron - Replaces 8132718 and 8132719
*11	8081191	1	1	SCREEN ASSEMBLY .. Inlet
*12	8081188	1	1	GASKET .. Inlet header
13	8114089	1	1	PLATE .. Inlet header - Steel
14	8020713	1	1	STUD .. Plate mounting - 1/2-13 x 2-1/2 in. long
15	116105	1	1	WASHER .. Plain - 1/2 I.D. Copper
16	8160543	1	1	NUT .. Acorn - 1/2-13
*17	179885	48	48	BOLT .. Header plate mounting - 1/2-13 x 1-1/2 hex. head
18	179887	256	256	BOLT .. Core to core mounting - 1/2-13 x 1-3/4 hex. head
19	102637	256	256	NUT .. Machine - 1/2-13 hex.
20	103323	304	304	WASHER .. Lock - 1/2

Aluminum headers 8132717, 8132718 and 8132719 were furnished with studs Ref. No. 21 and 22.

*21	8022014	40	40	STUD .. Radiator header - 1/2-13 x 2-1/16 in. long
*22	8014701	10	10	STUD .. Radiator header - 1/2-13 x 2-3/4 in. long
*23	8196628	1	1	PLATE .. Inlet header - Used on aluminum header only.
24	8081192	2	2	GASKET .. Inlet header to pipe flange
25	8024321	2	2	GASKET .. Outlet header to elbow

8155856

P. L. No. H532

ENGINE WATER COOLING RADIATOR ASSEMBLIES

RADIATOR ASSEMBLIES WITH 6 INCH COOLING CORE
F9, FL9, FP9 LOCOMOTIVE

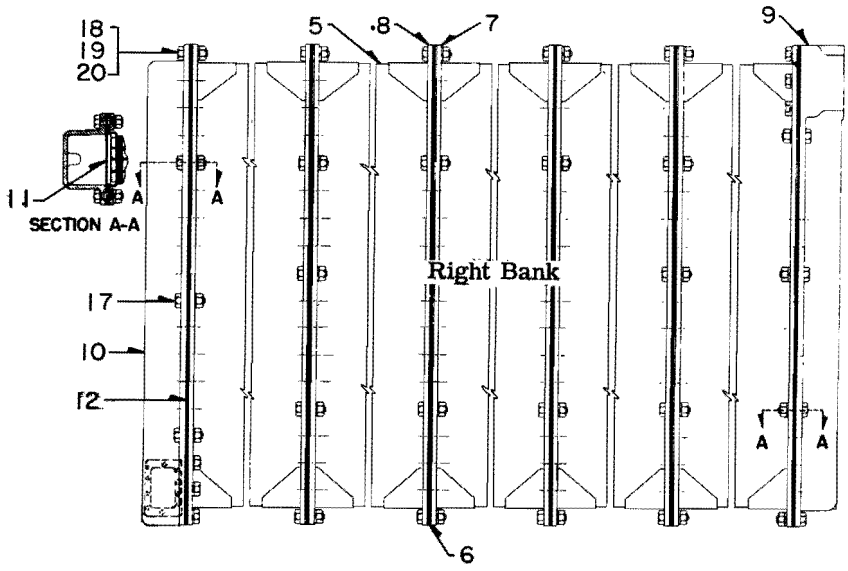

PLATE G532-5

Ref. No.	Part Number	No. Req.		Description
*1	8194725	A	-	RADIATOR ASSEMBLY .. Left bank - Alternate for 8209529
*2	8194726	A	-	RADIATOR ASSEMBLY .. Right bank - Alternate for 8209530
*3	8209529	-	B	RADIATOR ASSEMBLY .. Left bank - Alternate for 8194725
*4	8209530	-	B	RADIATOR ASSEMBLY .. Right bank - Alternate for 8194726
5	3129131	6	-	CORE .. Radiator cooling (Harrison)
5	8206685	-	6	CORE .. Radiator cooling (Young)
6	8177379	7	7	GASKET .. Core to core and header
7	8194723	12	12	PLATE .. Radiator clamp
8	8194724	12	12	PLATE ASSEMBLY .. Radiator clamp - Includes support lug
9	8189032	1	1	HEADER .. Outlet
10	8188896	1	1	HEADER .. Inlet
11	8189366	1	1	SCREEN ASSEMBLY .. Inlet
12	8189359	1	1	GASKET .. Plate mounting
*13	8189362	1	1	PLATE ASSEMBLY .. Clamp
*14	8020713	1	1	STUD .. Plate mounting - 1/2-13 x 2-1/2 in. long
*15	116105	1	1	WASHER .. Plain - 1/2 copper
*16	8160543	1	1	NUT .. Acorn - 1/2-13

The following components are applicable to Ref. Nos. 1 thru 4

17	179885	46	BOLT .. Header plate mounting - 1/2-13 x 1-1/2 hex. head
18	179887	256	BOLT .. Core to core mounting - 1/2-13 x 1-3/4 hex. head
19	102637	256	NUT .. Machine - 1/2-13 hex.
20	103323	302	WASHER .. Lock - 1/2
*21	8081192	1	GASKET .. Inlet header to elbow
*22	8177371	1	GASKET .. Outlet header to pipe flange

8194933 8160507

P. L. No. H532

ENGINE WATER COOLING RADIATOR ASSEMBLIES

RADIATOR ASSEMBLIES WITH 4 INCH COOLING CORES
GP7 LOCOMOTIVE

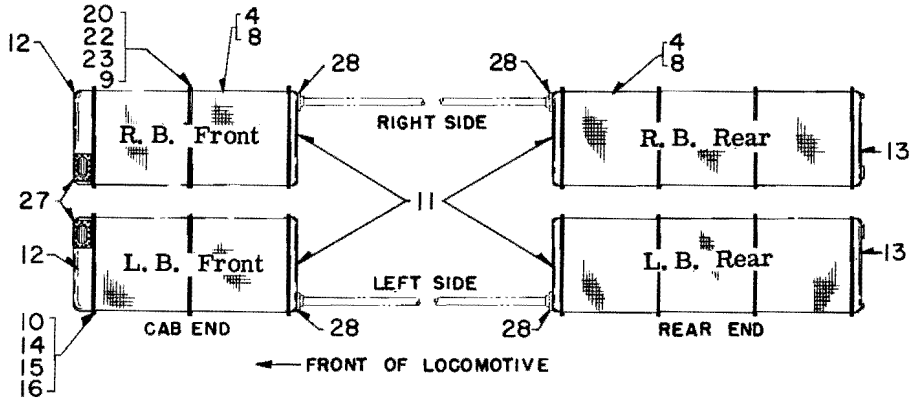

PLATE G532-6

Ref. No.	Part Number	Number Required			Description
*1	8172435	A	-	-	RADIATOR ASY. .. R. B. Front - Alternate for 8148145
*2	8172436	-	B	-	RADIATOR ASY. .. L. B. Front - Alternate for 8148146
*3	8172437	-	-	C	RADIATOR ASY. .. R & L. B. Rear - Alternate for 8148147
4	3129239	2	2	3	CORE .. Radiator cooling (Harrison)
*5	8148145	D	-	-	RADIATOR ASY. .. R. B. Front - Alternate for 8172435
*6	8148146	-	E	-	RADIATOR ASY. .. L. B. Front - Alternate for 8172436
*7	8148147	-	-	F	RADIATOR ASY. .. R-L. Rear - Alternate for 8172437
8	8127126	2	2	3	CORE .. Radiator cooling (Young)
The following components are applicable to Ref. Nos. 1 thru 3 and 5 thru 7.					
9	8018975	3	3	4	GASKET .. Core to core and header
10	8160755	8	8	12	PLATE .. Clamp
Aluminum headers have been replaced by cast iron headers. To avoid electrolytic corrosion between dissimilar metals, use aluminum header plate 8196628 with aluminum headers and steel plate 8114089 with cast iron headers.					
11	8167224	1	1	1	HEADER .. Outlet - Cast iron - Replaces 8132717
12	8167223	1	1	-	HEADER .. Inlet - Cast iron - Replaces 8132718
13	8167262	-	-	1	HEADER .. Inlet - Cast iron - Replaces 8148149
14	8081191	1	1	-	SCREEN ASSEMBLY .. Inlet
15	8081188	1	1	-	GASKET .. Header
16	8114089	1	1	-	PLATE .. Inlet header - Steel
*17	8020713	1	1	-	STUD .. Plate mounting - 1/2-13 x 2-1/2 in. long
*18	116105	1	1	-	WASHER .. Plain - 1/2 I. D. Copper
*19	8160543	1	1	-	NUT .. Acorn - 1/2-13
20	179885	48	48	16	BOLT .. Header plate mounting - 1/2-13 x 1-1/2 hex. head
*21	179887	96	96	144	BOLT .. Core to core mounting - 1/2-13 x 1-3/4 hex. head
22	102637	96	96	144	NUT .. Machine - 1/2-13 hex.
23	103323	144	144	160	WASHER .. Lock - 1/2
Aluminum headers 8132717, 8132718, 8148149 were furnished with studs Ref. Nos. 24 and 25.					
*24	8022014	A. R.			STUD .. Radiator header - 1/2-13 x 2-1/16 in. long
*25	8014701	A. R.			STUD .. Radiator header - 1/2-13 x 2-3/4 in. long
*26	8196628	1	1	1	PLATE .. Inlet header - Used on aluminum header only
27	8081192	2	2	2	GASKET .. Inlet header to pipe flange
28	8024321	2	2	2	GASKET .. Outlet header to elbow

8157509

P. L. No. H532

ENGINE WATER COOLING RADIATOR ASSEMBLIES

RADIATOR ASSEMBLIES WITH 6 INCH COOLING CORE
GP9 LOCOMOTIVE

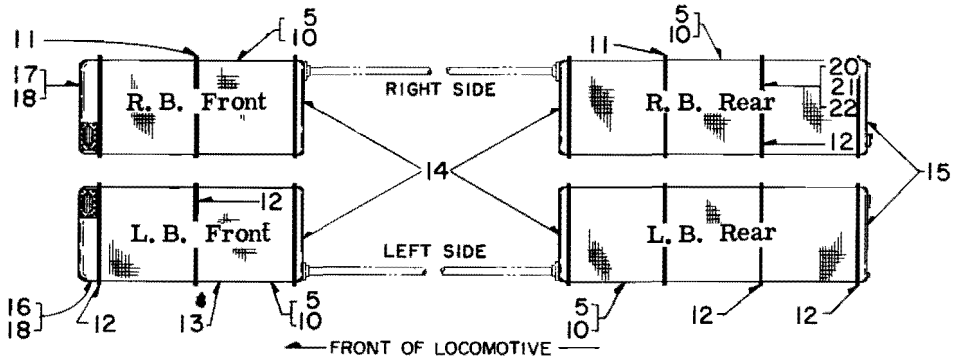

PLATE G532-7

Ref. No.	Part Number	Number Required				Description
* 1	8209590	A	-	-	-	RADIATOR ASY. .. L. B. Rear - Alternate for 8209438
* 2	8209591	-	B	-	-	RADIATOR ASY. .. R. B. Rear - Alternate for 8209439
* 3	8189351	-	-	C	-	RADIATOR ASY. .. L. B. Front - Alternate for 8209071
* 4	8189352	-	-	-	D	RADIATOR ASY. .. R. B. Front - Alternate for 8209072
5	3129131	3	3	2	2	CORE .. Radiator cooling (Harrison)
* 6	8209438	E	-	-	-	RADIATOR ASY. .. L. B. Rear - Alternate for 8209590
* 7	8209439	-	F	-	-	RADIATOR ASY. .. R. B. Rear - Alternate for 8209591
* 8	8209071	-	-	G	-	RADIATOR ASY. .. L. B. Front - Alternate for 8189351
* 9	8209072	-	-	-	H	RADIATOR ASY. .. R. B. Front - Alternate for 8189352
10	8206685	3	3	2	2	CORE .. Radiator cooling (Young)
The following components are applicable to Ref. Nos. 1 thru 4 and 6 thru 9.						
11	8177379	4	4	4	4	GASKET .. Core to core and header
12	8177378	12	12	8	8	PLATE .. Clamp
13	8206994	6	6	4	4	PLATE .. Closure
14	8189032	1	1	1	1	HEADER .. Outlet
15	8189034	1	1	-	-	HEADER .. Inlet
16	8314536	-	-	1	-	HEADER .. Inlet
17	8314535	-	-	-	1	HEADER .. Inlet
18	8194269	-	-	1	1	SCREEN ASSEMBLY .. Inlet
*19	179885	18		14		BOLT .. Header plate mounting - 1/2-13 x 1-1/2 hex. head
20	179887	142		106		BOLT .. Core to core mounting - 1/2-13 x 1-3/4 hex. head
21	102637	160		120		NUT .. Machine - 1/2-13 hex.
22	103323	142		106		WASHER .. Lock - 1/2
*23	8189350	1	-	-	-	PIPE ASSEMBLY .. Curved connection - L. B.
*24	8189349	-	1	-	-	PIPE ASSEMBLY .. Curved connection - R. B.
*25	8164931	4	4	-	-	FLANGE .. Pipe - Curved connection
*26	8234290	4	4	-	-	GASKET .. Pipe flange
*27	8177369	2	2	-	-	FLANGE .. Radiator header
*28	8208145	-	-	1	1	FLANGE ASSEMBLY .. Radiator header
*29	8177371	4	4	2	2	GASKET .. Flange and curved pipe mounting
*30	8246027	1	1	-	-	COUPLING .. Flexible
*31	8206809	-	-	1	-	ELBOW .. Inlet - L. B.
*32	8210638	-	-	-	1	ELBOW .. Inlet - R. B.
*33	8081192	-	-	1	1	GASKET .. Elbow mounting
*34	8284779	-	-	1	1	COUPLING .. Flexible - Inlet pipe to discharge "Y"

8208512 8208216

ENGINE WATER COOLING RADIATOR ASSEMBLIES

RADIATOR ASSEMBLIES WITH 6 INCH COOLING CORE
RS1325 LOCOMOTIVE

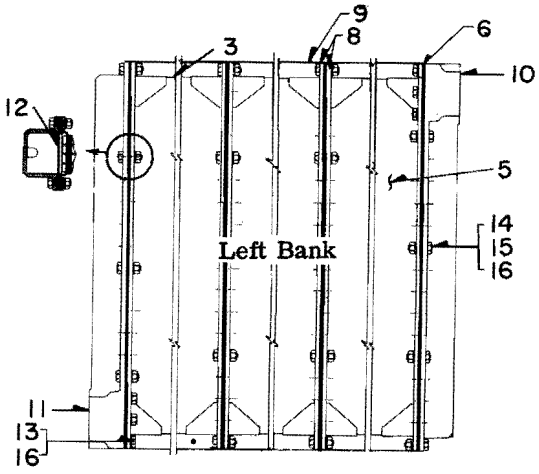

PLATE G532-8

Ref. No.	Part Number	Number Required				Description
* 1	8291433	A	-	-	-	RADIATOR ASY. .. Left bank - Alternate for 8291805
* 2	8291530	-	B	-	-	RADIATOR ASY. .. Right bank - Alternate for 8291804
* 3	8291805	-	-	C	-	RADIATOR ASY. .. Left bank - Alternate for 8291433
* 4	8291804	-	-	-	D	RADIATOR ASY. .. Right bank - Alternate for 8291530
5	3129131	3	3	-	-	CORE .. Radiator cooling (Harrison)
5	8206685	-	-	3	3	CORE .. Radiator cooling (Young)
6	8177379	4	4	4	4	GASKET .. Core to core and header
* 7	8291435	6	6	6	6	PLATE ASY. .. Clamp - Includes support lugs
8	8291434	6	6	6	6	PLATE .. Clamp
9	8206994	6	6	6	6	PLATE .. Closure
10	8189032	1	1	1	1	HEADER .. Outlet
11	8206615	1	-	1	-	HEADER .. Inlet
11	8206614	-	1	-	1	HEADER .. Inlet
12	8208768	1	1	1	1	SCREEN ASSEMBLY .. Inlet

The following components are applicable to Ref. Nos. 1 thru 4.

13	179885	18	BOLT .. Header plate mounting - 1/2-13 x 1-1/2 hex. head
14	179887	142	BOLT .. Core to core mounting - 1/2-13 x 1-3/4 hex. head
15	102637	142	NUT .. Machine - 1/2-13 hex.
16	103323	160	WASHER .. Lock - 1/2
*17	8291747	1	PIPE ASSEMBLY .. Outlet - Left bank
*18	8291746	1	PIPE ASSEMBLY .. Outlet - Right bank
*19	8177371	4	GASKET .. Outlet and inlet pipe mounting
*20	8164181	1	CONNECTION .. Outlet "Y"
*21	8244328	1	COUPLING .. Flex. - Outlet pipe to equipment rack
*22	8189356	2	FLANGE .. Inlet header pipe
*23	8291498	2	PIPE .. Inlet
*24	8164929	1	TEE .. Inlet pipe
*25	8234290	2	GASKET .. Inlet tee to inlet pipe
*26	8291500	1	CONNECTION .. Inlet water
*27	8164970	1	BRACKET .. Water connection mounting
*28	8028761	1	GASKET .. Water connection to inlet pipe
*29	8263837	1	COUPLING .. Flex. - Engine discharge elbow

8291801

P. L. No. H532

ENGINE WATER COOLING RADIATOR ASSEMBLIES

RADIATOR ASSEMBLIES WITH 4 INCH COOLING CORE
SD7 LOCOMOTIVE

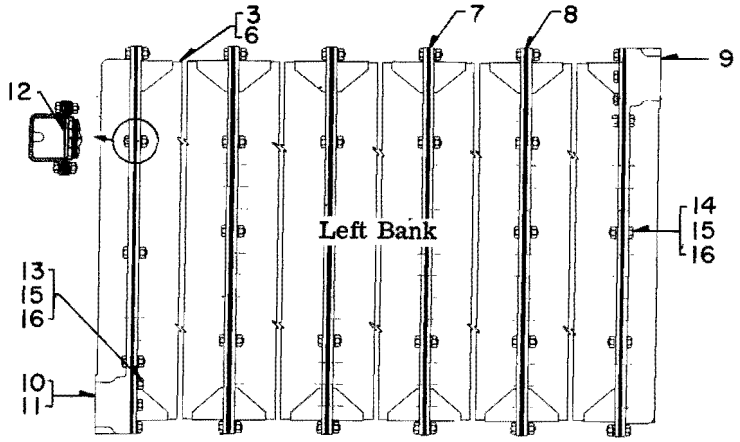

PLATE G532-9

Ref. No.	Part Number	No. Req.		Description	
*1	8182997	A	-	RADIATOR ASY. .. Left bank	- Alternate for 8178698
*2	8182996	-	B	RADIATOR ASY. .. Right bank	- Alternate for 8178697
*3	3129239	5	5	CORE .. Radiator cooling	(Harrison)
*4	8178698	C	-	RADIATOR ASY. .. Left bank	- Alternate for 8182997
*5	8178697	-	D	RADIATOR ASY. .. Right bank	- Alternate for 8182996
*6	8127126	5	5	CORE .. Radiator cooling	(Young)
The following components are applicable to Ref. No. 1, 2, 4 and 5.					
7	8018975	6	6	GASKET .. Core to core and header	
8	8160755	20	20	PLATE .. Clamp	
9	8167224	1	1	HEADER .. Outlet	
10	8177634	1	-	HEADER .. Inlet	
11	8177633	-	1	HEADER .. Inlet	
12	8177725	1	1	SCREEN ASSEMBLY .. Inlet	
13	179885	16		BOLT .. Header to core - 1/2-13 x 1-1/2 hex. head	
14	179887	224		BOLT .. Core to core and header - 1/2-13 x 1-3/4 hex. head	
15	102637	224		NUT .. Machine - 1/2-13 hex.	
16	103323	240		WASHER .. Lock - 1/2	
*17	8024321	4		GASKET .. Inlet and outlet pipe	
*18	8178849	2		PIPE .. Water return	
*19	8177678	1		TEE .. Water outlet	
*20	8187925	1		TEE ASSEMBLY .. Water inlet - Includes studs	
*21	8014438	4		STUD .. Mounting - 3/8-16 x 1-5/8 in. long	
*21	8164931	2		FLANGE .. Pipe	
*22	8234290	2		GASKET .. Pipe flange	
*23	8118709	2		FLANGE .. Radiator header	

~~8187711~~ 8187428

ENGINE WATER COOLING RADIATOR ASSEMBLIES

RADIATOR ASSEMBLIES WITH 6 INCH COOLING CORE
SD9 LOCOMOTIVE

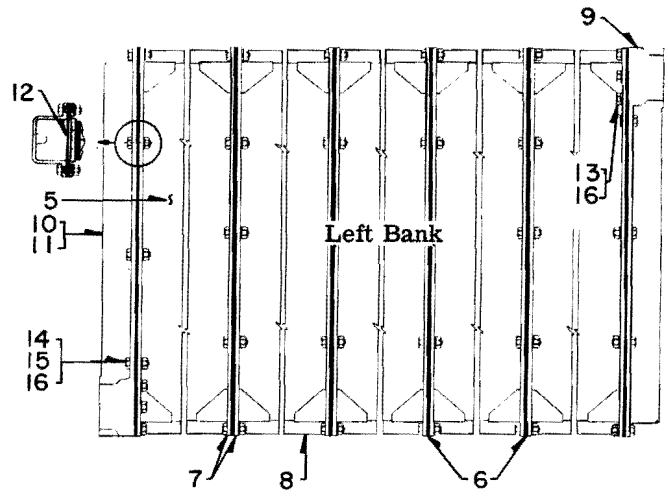

PLATE G532-10

Ref. No.	Part Number	Number Required				Description	
* 1	8208769	A	-	-	-	RADIATOR ASY. .. Left bank	- Alternate for 8210319
* 2	8208770	-	B	-	-	RADIATOR ASY. .. Right bank	- Alternate for 8210318
* 3	8210319	-	-	C	-	RADIATOR ASY. .. Left bank	- Alternate for 8208769
* 4	8210318	-	-	-	D	RADIATOR ASY. .. Right bank	- Alternate for 8208770
5	3129131	5	5	-	-	CORE .. Radiator cooling	(Harrison)
5	8206685	-	-	5	5	CORE .. Radiator cooling	(Young)
6	8177379	6	6	6	6	GASKET .. Core to core and header	
7	8177378	20	20	20	20	PLATE .. Clamp	
8	8206994	10	10	10	10	PLATE .. Closure	
9	8189032	1	1	1	1	HEADER .. Outlet	
10	8206615	1	-	1	-	HEADER .. Inlet	
11	8206614	-	1	-	1	HEADER .. Inlet	
12	8208768	1	1	1	1	SCREEN ASSEMBLY .. Inlet	

The following components are applicable to Ref. Nos. 1 thru 4.

13	179885	18	BOLT .. Header plate mounting - 1/2-13 x 1-1/2 hex. head
14	179887	222	BOLT .. Core to core mounting - 1/2-13 x 1-3/4 hex. head
15	102637	240	NUT .. Machine - 1/2-13 hex.
16	103323	240	WASHER .. Lock - 1/2
*17	8206579	2	ELBOW .. Outlet
*18	8177371	2	GASKET .. Outlet elbow mounting
*19	8177678	1	TEE .. Outlet
*20	8126649	1	GASKET .. Outlet tee mounting
*21	8027439	2	ELBOW .. Tube - 90° - 1/2 tube x 1/2 P. T.
*22	8208410	1	TUBE ASSEMBLY .. Inlet - Used on 8208769
*23	8208411	1	TUBE ASSEMBLY .. Inlet - Used on 8208770

8208413 8257542 8255811

P. L. No. H532

ENGINE WATER COOLING RADIATOR ASSEMBLIES

RADIATOR ASSEMBLIES WITH 4 INCH COOLING CORE
NW2, SW7, TR2, TR3, TR4 LOCOMOTIVES

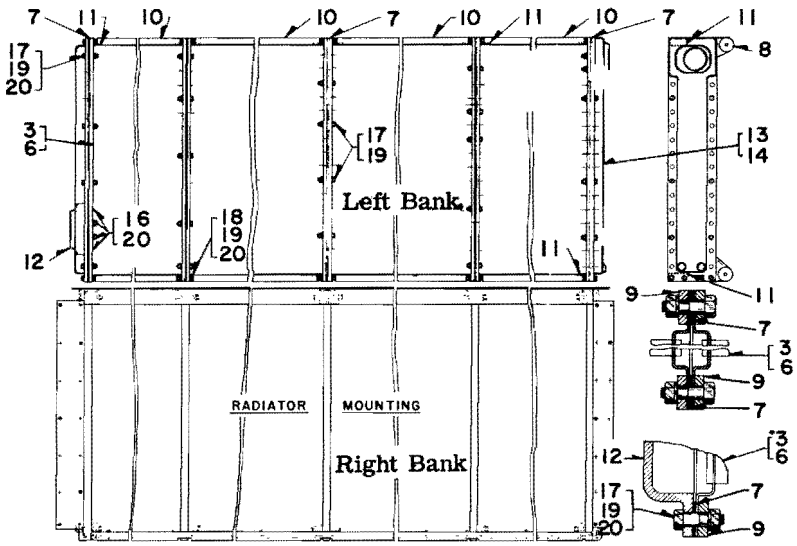

PLATE G532-11

Ref. No.	Part Number	No. Req.		Description
*1	8025065	A	-	RADIATOR ASY. .. Left bank - Alternate for 8135928
*2	8107899	-	B	RADIATOR ASY. .. Right bank - Alternate for 8135927
3	3129239	4	4	CORE .. Radiator cooling (Harrison)
*4	8135928	C	-	RADIATOR ASY. .. Left bank - Alternate for 8025065
*5	8135927	-	D	RADIATOR ASY. .. Right bank - Alternate for 8107899
6	8127126	4	4	CORE .. Radiator cooling (Young)

The following component parts are applicable to Ref. Nos. 1, 2, 4 and 5.

7	8018975	5	5	GASKET .. Core to core and header
8	8094857	8	8	PLATE ASY. .. Clamp - Replaces 8094895
9	8081189	8	8	PLATE .. Clamp
10	8024331	8	8	PLATE .. Baffle
11	8024328	16	16	CLIP .. Baffle
12	8162762	1	1	HEADER .. Outlet - Cast iron - Repl. 8132767 Alum. header
13	8162765	1	-	HEADER .. Inlet - Cast iron - Repl. 8132768 Alum. header
14	8162764	-	1	HEADER .. Inlet - Cast iron - Repl. 8132769 Alum. header
*15	8177725	1	1	SCREEN ASSEMBLY .. Inlet
16	179883	16		BOLT .. Support - 1/2-13 x 1-1/4 hex. head
17	179887	172		BOLT .. Core to core - 1/2-13 x 1-3/4 hex. head
18	179889	12		BOLT .. Header to core - 1/2-13 x 2 hex. head
19	102637	200		NUT .. Machine - 1/2-13 hex.
20	103323	200		WASHER .. Lock - 1/2
*21	8024321	2		GASKET .. Header to pipe flange

Aluminum headers were furnished with studs Ref. No. 22.

*22	8049509	16	STUD .. Radiator header - 1/2-13 x 2-1/4 in. long

8139228 8029687 8135926

P. L. No. H532

ENGINE WATER COOLING RADIATOR ASSEMBLIES

RADIATOR ASSEMBLIES WITH 4 INCH COOLING CORE

SW1 LOCOMOTIVE

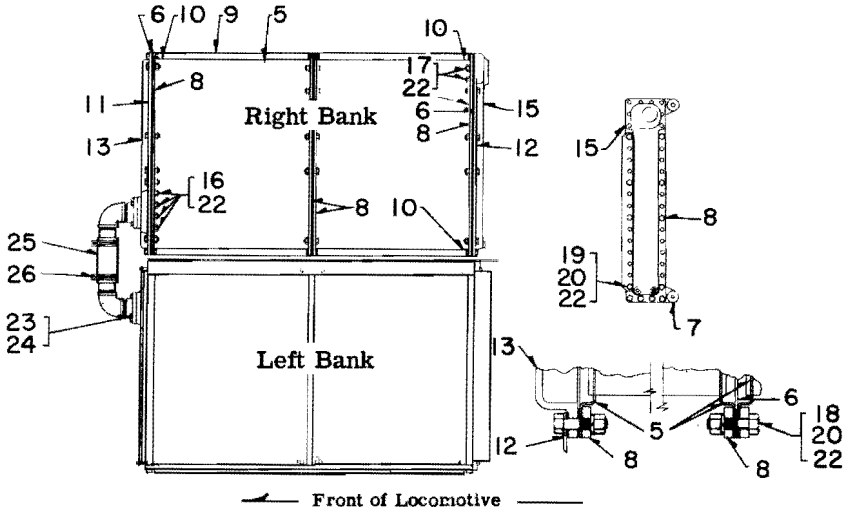

PLATE G532-12

Ref. No.	Part Number	Number Required				Description
1	8170880	A	-	-	-	RADIATOR ASY. .. Left bank - Alternate for 8135728
2	8170879	-	B	-	-	RADIATOR ASY. .. Right bank - Alternate for 8135729
3	8135728	-	-	C	-	RADIATOR ASY. .. Left bank - Alternate for 8170880
4	8135729	-	-	-	D	RADIATOR ASY. .. Right bank - Alternate for 8170879
5	3129239	2	2	-	-	CORE .. Radiator cooling (Harrison)
5	8127126	-	-	2	2	CORE .. Radiator cooling (Young)
6	8018975	4	4	4	4	GASKET .. Core to core and header
7	8094857	4	4	4	4	PLATE ASY. .. Clamp - Includes support lugs
8	8081189	4	4	4	4	PLATE .. Clamp
9	8024331	4	4	4	4	PLATE .. Baffle
10	8024328	8	8	8	8	CLIP .. Baffle
11	8024329	1	1	1	1	SUPPORT .. Front sheet
12	8024330	1	1	1	1	SUPPORT .. Rear sheet
13	8162762	1	1	1	1	HEADER .. Front
*14	8162763	1	-	1	-	HEADER .. L. B. Rear
15	8162761	-	1	-	1	HEADER .. R. B. Rear
16	8177725	1	1	1	1	SCREEN ASSEMBLY .. Inlet

The following components are applicable to Ref. Nos. 1 thru 4.

17	179883	16	BOLT .. Header to core - 1/2-13 x 1-1/4 hex. head
18	179887	78	BOLT .. Core to core - 1/2-13 x 1-3/4 hex. head
19	179889	26	BOLT .. Sheet support - 1/2-13 x 2 hex. head
20	102637	26	NUT .. Machine - 1/2-13 hex.
*21	103343	104	WASHER .. Plain - 1/2
22	103323	120	WASHER .. Lock - 1/2
23	8024320	2	FLANGE .. Radiator header
24	8024321	2	GASKET .. Radiator flange
25	8035716	1	HOSE .. Rubber - 2-7/8 I.D. x 8 in. long
26	8048701	2	CLAMP .. Hose

8135727

P. L. No. H532

ENGINE WATER COOLING RADIATOR ASSEMBLIES

RADIATOR ASSEMBLIES WITH 4 INCH COOLING CORE
SW8, SW9, SW600, SW900, SW1200, TR5, TR6, TR9 LOCOMOTIVES

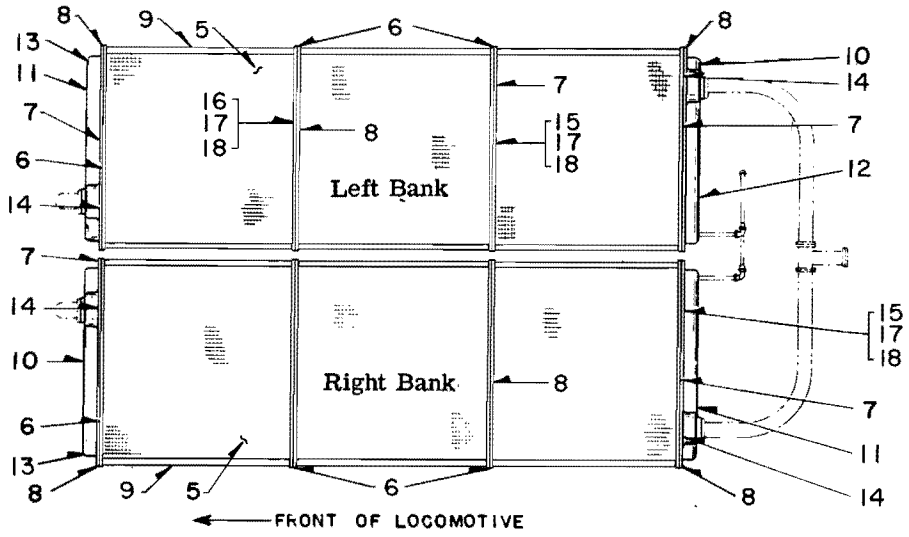

PLATE G532-13

Ref. No.	Part Number	No. Req.		Description	
* 1	8170244	A	-	RADIATOR ASY. .. Left bank -	Alternate for 8165234
* 2	8170245	A	-	RADIATOR ASY. .. Right bank -	Alternate for 8165235
* 3	8165234	-	B	RADIATOR ASY. .. Left bank -	Alternate for 8170244
* 4	8165235	-	B	RADIATOR ASY. .. Right bank -	Alternate for 8170245
5	3129239	3	-	CORE .. Radiator cooling	(Harrison)
5	8127126	-	3	CORE .. Radiator cooling	(Young)

The following components are applicable to Ref. Nos. 1 thru 4.

6	8018975	4	GASKET .. Core to core and header
7	8081189	6	PLATE .. Clamp
8	8094857	6	PLATE ASSEMBLY .. Clamp
9	8206994	6	PLATE .. Closure
10	8165089	1	HEADER .. Outlet
11	8162762	1	HEADER .. Inlet
12	8177125	1	SCREEN ASSEMBLY .. Inlet
13	103868	1	PLUG .. Pipe - 1/2 P. T.
14	179883	16	BOLT .. Header mounting - 1/2-13 x 1-1/4 hex. head
15	179887	136	BOLT .. Core to core - 1/2-13 x 1-3/4 hex. head
16	179889	8	BOLT .. Header mounting - 1/2-13 x 2 hex. head
17	102637	144	NUT .. Machine - 1/2-13 hex.
18	103323	160	WASHER .. Lock - 1/2
*19	8164930	2	PIPE .. Water inlet - Curved
*20	8118709	2	FLANGE .. Inlet pipe
*21	8024321	4	GASKET .. Inlet pipe and outlet bend return
*22	8164929	1	TEE .. Water inlet
*23	8234290	2	GASKET .. Inlet tee mounting
*24	8028761	1	GASKET .. Inlet tee to inlet water connection
*25	8163921	1	CONNECTION .. Inlet water
*26	8244328	2	COUPLING .. Flexible
*27	8164106	2	RETURN .. Bend - Water outlet
*28	8164181	1	CONNECTION .. "Y" - Water outlet

8165334W

Parts List No. F533

WATER TANK LEVEL GAUGE

ALL LOCOMOTIVES WITH SERIES 567 ENGINE
PLATE E533-1

Ref. No.	Part Number	Number Required							Description
/	8182353	A	-	-	-	-	-	-	GAUGE .. Water level - SD7, SD9
/	8117495	-	B	-	-	-	-	-	GAUGE .. Water level - F2, F3, F7, FP7, E8, F9, FL9, FP9, E9
/	8165086	-	-	C	-	-	-	-	GAUGE .. Water level - SW8, SW9, TR, TR1, SW600, SW900, SW1200
/	8157497	-	-	-	D	-	-	-	GAUGE .. Water level - GP7, GP9
/	8117496	-	-	-	-	E	-	-	GAUGE .. Water level - E3, E4, E5, E6, E7, NW2, NW3, NW5, SW1, SW7, TR2, TR3, TR4, TR5
/	8115696	-	-	-	-	-	F	-	GAUGE .. Water level - FT
/	8124515	-	-	-	-	-	-	G	GAUGE .. Water level - Windshield wiper water tank - F3, F7, FP7, E7, E8
/ Above assemblies are replaced by the component parts listed in this parts list.									
1	8118872	1	1	1	1	-	-	-	BODY .. Upper water gauge
1	8118868	-	-	-	-	1	1	1	BODY .. Upper water gauge - Replaces 8115906 body used in FT gauge
2	8120768	1	1	1	1	-	-	-	WASHER .. Fiber
2	8120777	-	-	-	-	1	1	1	WASHER .. Fiber
3	8120766	1	1	1	1	-	-	-	WASHER .. Rubber
3	8120779	-	-	-	-	1	1	1	WASHER .. Rubber
4	8120767	1	1	1	1	-	-	-	PACKING .. Valve stem
4	8120778	-	-	-	-	1	1	1	PACKING .. Valve stem
5	8202271	1	1	1	1	-	-	-	NUT .. Gauge glass
5	8195414	-	-	-	-	1	1	1	NUT .. Gauge glass
6	8202270	1	1	1	1	-	-	-	NUT .. Valve stem
6	8195413	-	-	-	-	1	1	1	NUT .. Valve stem
7	8153702	1	1	1	1	1	1	1	HANDLE
8	8118871	1	1	1	1	-	-	-	BODY .. Lower water gauge
8	8118867	-	-	-	-	1	1	1	BODY .. Lower water gauge - Replaces 8115905 body used in FT gauge
9	8120768	1	1	1	1	-	-	-	WASHER .. Fiber
9	8120777	-	-	-	-	1	1	1	WASHER .. Fiber
10	8120766	1	1	1	1	-	-	-	WASHER .. Rubber
10	8120779	-	-	-	-	1	1	1	WASHER .. Rubber
11	8120767	1	1	1	1	-	-	-	PACKING .. Valve stem
11	8120778	-	-	-	-	1	1	1	PACKING .. Valve stem
12	8202271	1	1	1	1	-	-	-	NUT .. Gauge glass
12	8195414	-	-	-	-	1	1	1	NUT .. Gauge glass
13	8202270	1	1	1	1	-	-	-	NUT .. Valve stem
13	8195413	-	-	-	-	1	1	1	NUT .. Valve stem
14	8153702	1	1	1	1	1	1	1	HANDLE
15	8153701	1	1	1	1	1	1	1	COCK .. Drain - 1/8 P. T. - Replaces 114981
16	8182352	1	-	-	-	-	-	-	GLASS .. Gauge - 3/4 dia. x 13-5/8 in. lg.
17	8118873	-	1	-	-	-	-	-	GLASS .. Gauge - 3/4 dia. x 14-5/8 in. lg.
18	8165085	-	-	1	-	-	-	-	GLASS .. Gauge - 3/4 dia. x 12 in. lg.
19	8157495	-	-	-	1	-	-	-	GLASS .. Gauge - 3/4 dia. x 17-3/4 dia. x 17 in. lg.
20	8118869	-	-	-	-	1	-	-	GLASS .. Gauge - 5/8 dia. x 11-1/2 in. lg.
21	8115904	-	-	-	-	-	1	-	GLASS .. Gauge - 5/8 dia. x 28-5/8 in. lg.
22	8124517	-	-	-	-	-	-	1	GLASS .. Gauge - 5/8 dia. x 8-1/2 in. lg.
23	8182351	2	-	-	-	-	-	-	ROD .. Guard
24	8118874	-	2	-	-	-	-	-	ROD .. Guard
25	8165084	-	-	2	-	-	-	-	ROD .. Guard
26	8157496	-	-	-	2	-	-	-	ROD .. Guard
27	8118870	-	-	-	-	2	-	-	ROD .. Guard
28	8115903	-	-	-	-	-	2	-	ROD .. Guard
29	8124516	-	-	-	-	-	-	2	ROD .. Guard

P. L. No. F533

WATER TANK LEVEL GAUGE

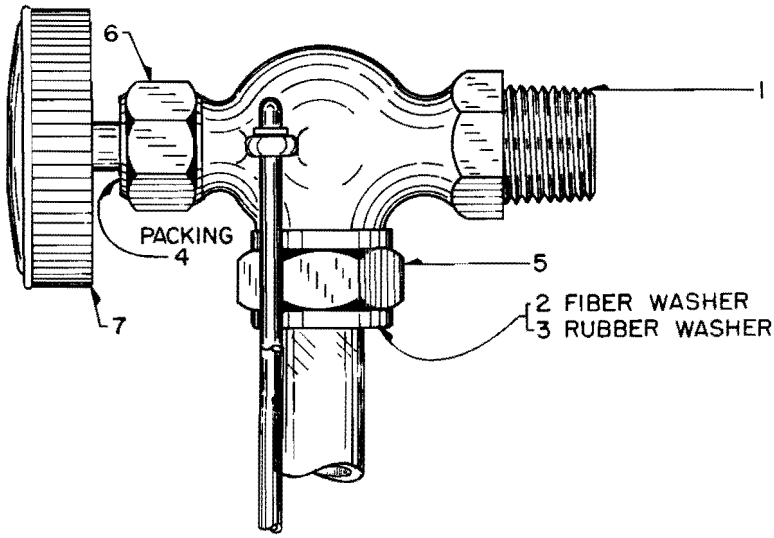

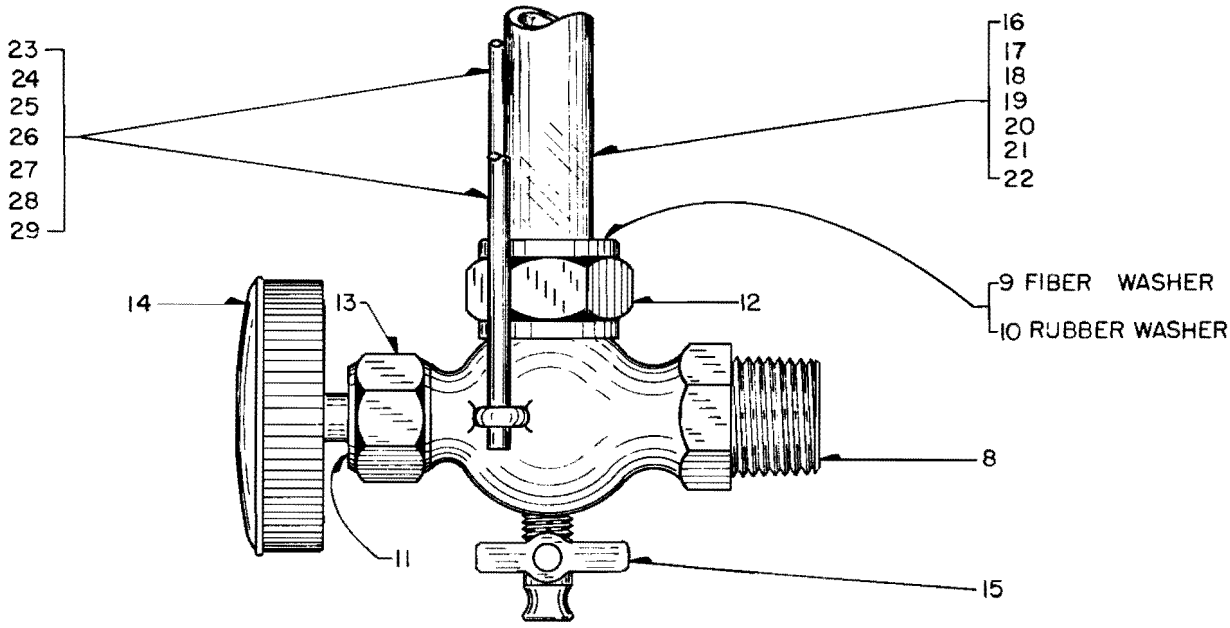

PLATE C533-1

Parts List No. A534

COOLING SYSTEM GASKETS - HOSE - CLAMPS

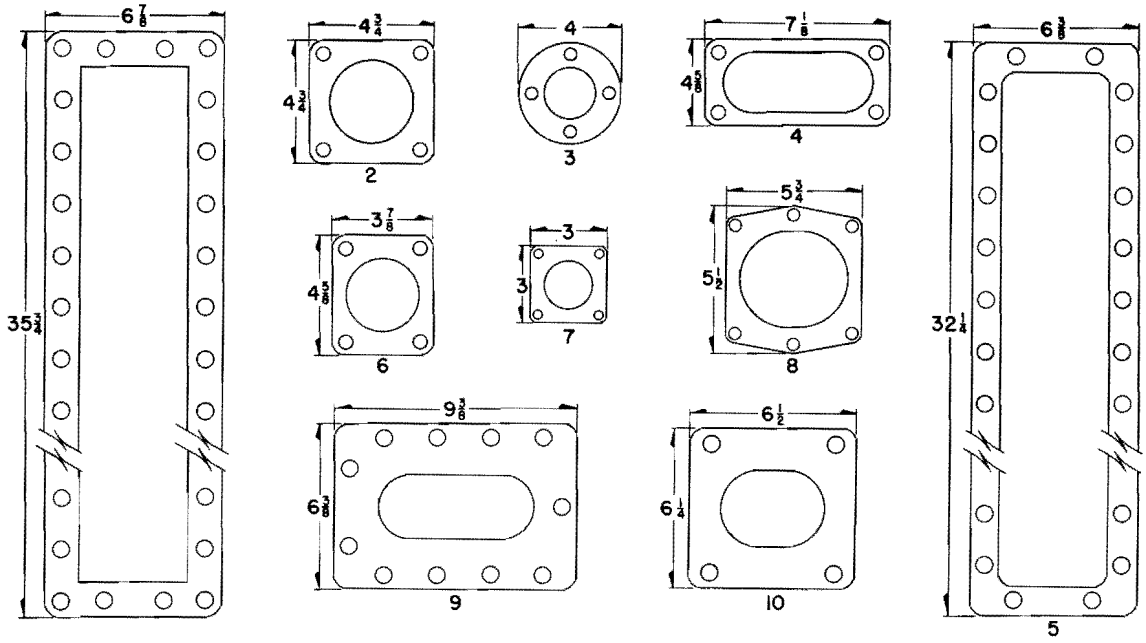

PLATE A534-1

Ref. No.	Part Number	No. Req.	Description
1	8018975	14	GASKET .. Radiator core (3/32 Inch thick)
2	8038897	1	GASKET .. 3-1/4 Inch flange - Rear exhaust manifold outlet to "Y" fitting (1/16 Inch thick)
3	8088988	1	GASKET .. 2 Inch flange - Inlet elbow blind flange (1/16 Inch thick)
4	8070513	1	GASKET .. Flange - Crankcase front water outlet
5	8081188	2	GASKET .. Radiator inlet plate to header (1/16 Inch thick)
6	8055261	4	GASKET .. 2-7/8 Inch flange - Radiator hose flange (1/32 Inch thick)
7	8029469	2	GASKET .. 1-13/16 Inch flange - Water tank (1/32 Inch thick)
8	8024321	2	GASKET ..
9	8081192	2	GASKET .. Radiator inlet elbow to radiator header (1/16 Inch thick)
10	8146490	1	GASKET .. Flanged elbow to "Y" fitting and exhaust manifold (1/16 Inch thick)
*11	8035705	2	HOSE .. Rubber (1 I.D. x 6 Inches long)
*12	8048696	4	CLAMP .. Hose
*13	8109536	2	HOSE .. Rubber (2-3/4 I.D. x 7 Inches long)
*14	6531905	4	CLAMP .. Hose

The proper Hose Clamp to use is listed directly beneath the hose.

Parts List No. C540

WATER TEMPERATURE GAUGE

BL, GP7, GP9, NW2, NW3, NW5, SW1, SW7, SW8, SW9, SW600, SW900, SW1200, TR2, TR3, TR4, TR5, TR6

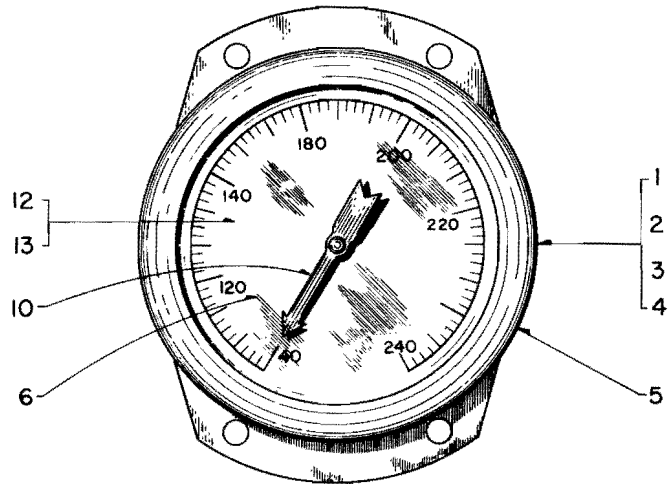

PLATE A540-1

Ref. No.	Part Number	Number Required						Description
GAUGE . . Water Temperature								
1	8015520	A	-	-	-	-	-	GAUGE . . Water temperature - 18 ft. lead - SW1, SW8, SW9, SW600, SW900, SW1200, TR5, TR6, TR9, TR12
2	8091803	-	B	-	-	-	-	GAUGE . . Water temperature - 22 ft. lead - BL, NW2, NW5, SW1, TR2, TR3
3	8091804	-	-	C	-	-	-	GAUGE . . Water temperature - 27 ft. lead - NW2, NW3, SW7, TR2, TR4
4	8157368	-	-	-	D	-	-	GAUGE . . Water temperature - 12 ft. lead - NW2, GP7, SW1, SW7, SW8, TR2, TR3, TR4
4A	8161579	-	-	-	-	E	-	GAUGE . . Water temperature - 30 ft. lead - GP7, SW8, SW9, TR5
4B	8177315	-	-	-	-	-	F	GAUGE . . Water temperature - 6 ft. lead - GP7
TEMPERATURE GAUGE COMPONENTS								
5	8140930	1	1	1	1	1	1	RING . . Rim
6	8035750	1	1	1	1	1	1	GLASS
* 7	8155819	1	1	1	1	1	1	MOVEMENT ASSEMBLY
* 8	8039946	1	1	1	1	1	1	LINK
* 9	8054980	2	2	2	2	2	2	SCREW . . Link
10	8039951	1	1	1	1	1	1	POINTER
*11	133359	1	1	1	1	1	1	SCREW . . Movement
12	224486	2	2	2	2	2	2	SCREW . . Dial
13	8039950	1	1	1	1	1	1	DIAL

P. L. No. C540

WATER TEMPERATURE GAUGE

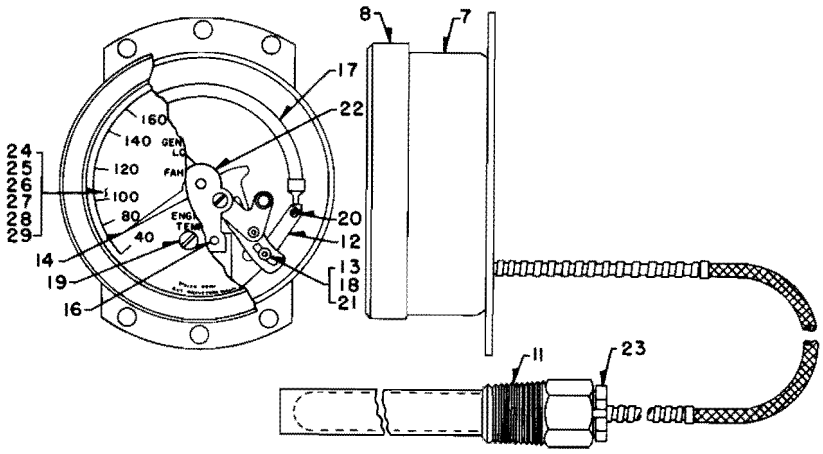

PLATE B540-2

Ref. No.	Part Number	No. Req.	Description
GAUGE . . Water Temperature			
1	8231184	1	GAUGE . . 40° to 240° - 3-1/2 in. dial. - Includes 6 ft. cable
2	8231185	1	GAUGE . . 40° to 240° - 3-1/2 in. dial. - Includes 12 ft. cable
3	8231186	1	GAUGE . . 40° to 240° - 3-1/2 in. dial. - Includes 18 ft. cable
4	8231187	1	GAUGE . . 40° to 240° - 3-1/2 in. dial. - Includes 22 ft. cable
5	8231188	1	GAUGE . . 40° to 240° - 3-1/2 in. dial. - Includes 27 ft. cable
6	8231189	1	GAUGE . . 40° to 240° - 3-1/2 in. dial. - Includes 50 ft. cable
WATER GAUGE COMPONENTS			
7	8238101	1	CASE ASSEMBLY
8	8222119	1	RING . . Threaded
* 9	8222120	1	GLASS . . Gauge
*10	8222121	1	GASKET
11	8238100	1	SOCKET . . Separable- 1/2 N. P. T.
12	8238099	1	LINK - 7/32 x 7/16 with 2-. 113 dia. holes
13	8222142	1	WASHER- . 089 I. D. x 1/4 O. D. x . 037 thick
14	8238098	1	POINTER ASSEMBLY
15	8238097	2	SCREW . . Case mounting- 10-32 x 3/8 flathead
16	8238096	2	STUD . . Movement mounting- 8-32 x . 195 hex. hd
17	8238074	1	TUBE ASSEMBLY. . Bourdon - Includes socket
18	8222129	1	NUT . . Sliding- No. 2-56 thread
19	8222130	2	SCREW . . Dial - No. 3-48 x 1/8 lg.
20	8238095	1	SCREW . . Link - Segment- No. 2-56 x . 200
21	8238094	1	SCREW . . Link - End piece- No. 2-56 x . 168
22	8238093	1	MOVEMENT ASSEMBLY
23	8238092	1	NUT . . Union- 3/4-16 hex.
DIAL ASSEMBLY . . Water Temperature Gauge			
24	8238069	1	DIAL ASSEMBLY . . Includes stop pin - For Ref. No. 1
25	8238077	1	DIAL ASSEMBLY . . Includes stop pin - For Ref. No. 2
26	8238071	1	DIAL ASSEMBLY . . Includes stop pin - For Ref. No. 3
27	8238073	1	DIAL ASSEMBLY . . Includes stop pin - For Ref. No. 4
28	8238025	1	DIAL ASSEMBLY . . Includes stop pin - For Ref. No. 5
29	8238067	1	DIAL ASSEMBLY . . Includes stop pin - For Ref. No. 6

Parts List No. C703

FUEL OIL PIPING ARRANGEMENT

F2, F3, F7, FP7 Locomotives

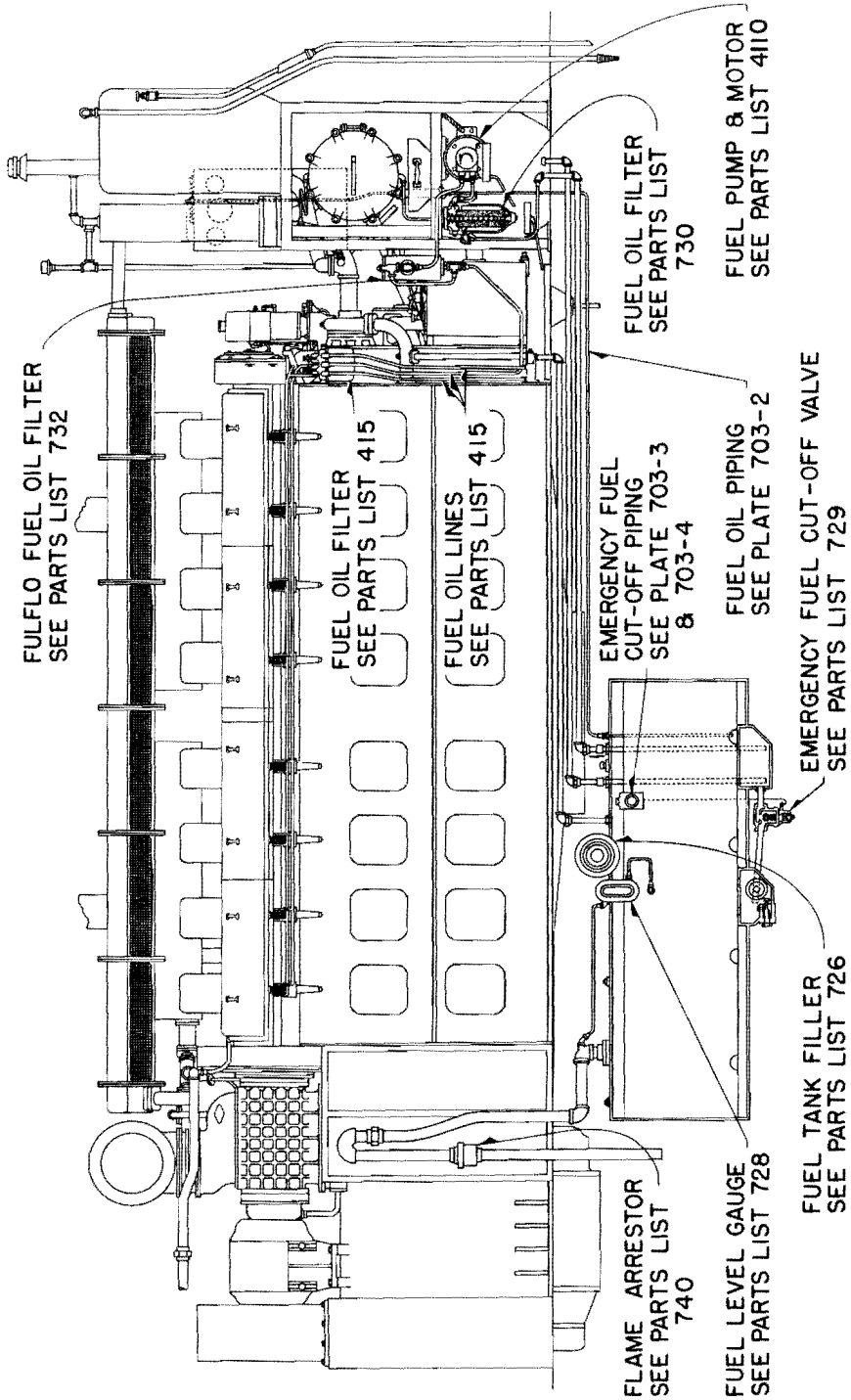

PLATE C703-1

P. L. No. C703

FUEL OIL PIPING

PLATE B703-2

Ref. No.	Part Number	No. Req.	Description
1	8178158	1	TANK .. Fuel - 1200 gallon - Replaces 8081977
2	- - - - -	2	GAUGE .. Fuel tank level - See P. L. 728
3	- - - - -	2	FILLER .. Fuel tank - See P. L. 726
4	- - - - -	1	EMERGENCY FUEL CUT-OFF PIPING .. "A" unit - See Plate 703-3
4	- - - - -	1	EMERGENCY FUEL CUT-OFF PIPING .. "B" unit - See Plate 703-4
5	8015809	2	ARRESTOR .. Pipe line flame - See P. L. 740
6	8122502	A. R.	TUBING .. Copper - 2.375 O. D. - 10 ft. req. - Avail. 20 ft. length
7	8062409	2	BEND .. Return - 2 in. solder
8	8045908	2	UNION .. Pipe - Bronze - 2 in. female solder
9	8062398	2	ELBOW .. Pipe - 2 in. 90° solder
10	8062303	2	TEE .. Reducing pipe - 2 in. solder x 1/2 P. T. x 2 in solder
11	8061464	2	NIPPLE .. Close pipe - 2 in.
12	8015690	2	GASKET .. Vent line flange to fuel tank
13	8044290	2	FLANGE .. Vent line to fuel tank
14	103321	8	WASHER .. Lock
15	179839	8	SCREW .. Cap - Vent line flange to fuel tank - 3/8-16 x 1 hex. hd.
16	8113050	A. R.	PIPE .. Brass - 3/4 in. - Approx. 52 ft. req. - Avail. 12 ft. length
17	8045930	3	ELBOW .. Union pipe - 3/4 - 90°
18	113177	4	PLUG .. Pipe - 3/4 sq. hd.
19	8062419	2	COUPLING .. Pipe - 3/4 solder x 3/4 P. T.
20	119102	1	CAP .. Pipe - Fuel tank - 3/4
21	8062394	6	ELBOW .. Pipe - 3/4 - 90° solder
22	8073346	1	NIPPLE .. Close pipe - 3/4
23	8092338	1	TEE .. Union pipe - 3/4 P. T. x 3/4 P. T. x 3/4 solder
24	8116729	A. R.	TUBING .. Copper - 5/8 - Approx. 11 ft. req. - Avail. 50 ft. length
25	8040322	2	CONNECTOR .. Flared tube
26	116488	4	NUT .. Flared tube - 5/8
27	8116856	A. R.	TUBING .. Copper - 3/8 - Approx. 23 ft. req. - Avail. 25 ft. length
28	118802	2	CONNECTOR .. Flared tube - 3/8
29	118539	10	NUT .. Flared tube - 3/8
30	118755	1	ELBOW .. Flared tube - 3/8
31	118750	2	CONNECTOR .. Flared tube - 3/8
32	8039024	1	CHAMBER .. Surge
33	118812	1	ELBOW .. Flared tube - 5/8
34	8040350	1	ELBOW .. Flared tube - 3/8 tube x 3/8 F. P. T.
35	8024240	1	BUSHING .. Reducing pipe - 1-1/2 M. P. T. with slip fit for 3/8 pipe
36	8116870	A. R.	PIPE .. Brass - 3/8 I. P. S. - Approx. 3 ft. req. - Avail. 12 ft. length
*37	8045936	1	ELBOW .. Union pipe - 3/4 - 90°
38	8079494	1	FILTER .. Fuel oil - See P. L. 730
39	8132295	1	FILTER .. Ful-Flo fuel oil - See P. L. 730
40	8080384	1	PUMP .. Fuel - Includes motor - See P. L. 4110

8098611

P. L. No. C703

FUEL OIL PIPING

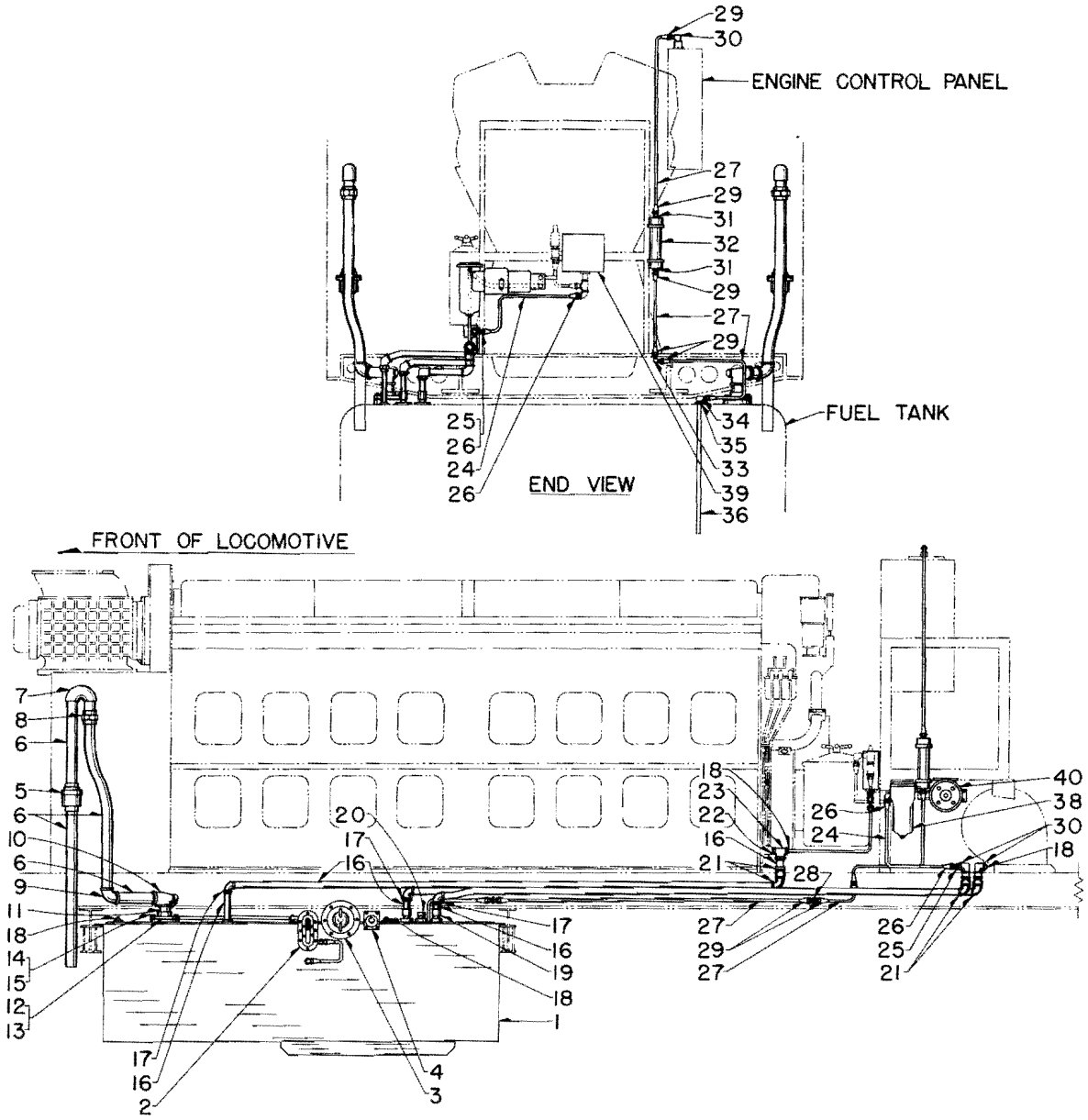

PLATE B703-2

P. L. No. C703

"A" UNIT EMERGENCY FUEL CUT-OFF PIPING
PLATE B703-3

Ref. No.	Part Number	No. Req.	Description
1	8069331	2	PULL BOX .. Emergency fuel cut-off - Flush type
2	8015774	2	PLATE .. Pull box front
3	8044145	2	PLATE .. Pull box slide
4	8044133	2	PLATE .. Pull box mounting
5	100803	6	SCREW .. Mounting plate to pull box - 6-32 x 1/2 flat head slotted
6	106495	6	WASHER .. Lock - No. 6
7	103091	6	NUT .. 6-32 hex.
8	171964	8	SCREW .. Front plate to carbody - 10-24 x 1 oval head slotted
9	171260	4	SCREW .. Mounting plate to carbody - 10-24 x 3/4 flat head slotted
10	8113398	1	RING ASSEMBLY - Includes 6 foot cable
11	8126886	1	RING ASSEMBLY - Includes 16 foot cable
12	119933	5	BUSHING .. Reducing
13	8116868	A. R.	PIPE .. Brass - 1/8 in. - Approx. 40 ft. req. for F3, F7, and 44 ft. required for FP7 - Avail. 12 ft. long
14	179699	5	UNION .. Female pipe
15	8094336	1	PULL BOX .. Emergency fuel cut-off - Located in rear cab partition wall
16	8126888	1	RING ASSEMBLY .. Includes cable 34 ft. long - F3 and F7 locomotives only
16	8104695	1	RING ASSEMBLY .. Includes cable 41 ft. long - FP7 locomotive
17	171933	4	SCREW .. 10-24 x 3/8 - Oval head slotted tapping
18	8073344	1	NIPPLE .. Close - Pipe
19	8058583	2	UNION .. Female pipe - 3/8 P. T.
20	8065074	3	PULLEY .. Corner - 90°
21	8117825	1	BRACKET .. Pulley
22	123854	8	SCREW .. Flat head slotted
23	8117824	1	BRACKET .. Pulley
24	8061465	2	NIPPLE .. Short - Pipe 1/8
25	8109190	1	GUARD .. Pipe
26	8116870	A. R.	PIPE .. Brass - 3/8 - Approx. 11 ft. required - Avail. 12 ft. length
27	8083883	1	VALVE .. Emergency fuel cut-off - See P. L. 729
28	8108111	2	CLAMP .. Tube
29	8105937	1	CLAMP .. Pipe - 1 in. wide x 2-1/2 in. long
30	8108299	4	CLAMP .. Tube
31	8108259	2	CLAMP .. Tube
32	8108210	1	CLAMP .. Hanger and tube
33	8108114	2	CLAMP .. Pipe
34	190731	1	NIPPLE .. Pipe - 3/8

8092731 8142187

Parts List No. C703

"A" UNIT EMERGENCY FUEL CUT-OFF PIPING

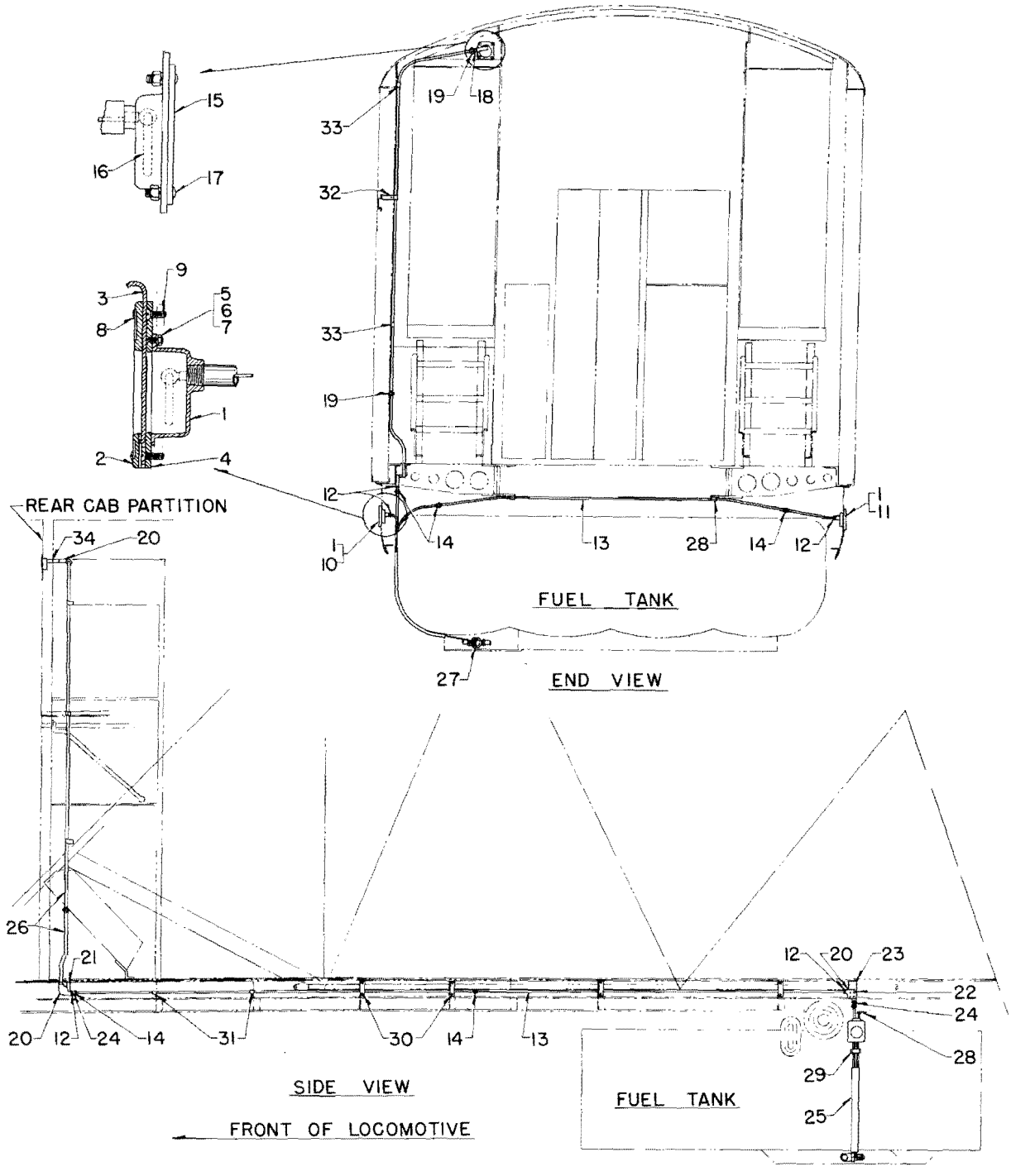

PLATE B703-3

P. L. No. C703

"B" UNIT EMERGENCY FUEL CUT-OFF PIPING
PLATE B703-4

Ref. No.	Part Number	No. Req.	Description
1	8069331	2	PULL BOX .. Emergency fuel cut-off - Flush type
2	8015774	2	PLATE .. Front
3	8044145	2	PLATE .. Slide
4	8044133	2	PLATE .. Pull box mounting
5	100803	6	SCREW .. Mounting plate to pull box - 6-32 x 1/2 flat head slotted
6	106495	6	WASHER .. Lock - No. 6
7	103091	6	NUT .. 6-32 hex.
8	171964	8	SCREW .. Front plate to carbody - 10-24 x 1 oval hd. slotted
9	171260	4	SCREW .. Mounting plate to carbody - 10-24 x 3/4 flant head slotted
10	8113998	1	RING ASSEMBLY .. Includes 6 ft. cable
11	8126886	1	RING ASSEMBLY .. Includes 16 ft. cable
12	119933	5	BUSHING .. Reducing
13	8116868	A. R.	PIPE .. Brass - 1/8 in. - Approx. 45 ft. req. - Avail. 12 ft. long
14	179699	5	UNION .. Female pipe
15	8094336	1	PULL BOX .. Emergency fuel cut-off
16	8126887	1	RING ASSEMBLY .. Includes cable 19 ft. long
17	8092735	1	BRACKET .. Pull box
18	110546	4	SCREW .. Pull box to bracket
19	106497	4	WASHER .. Lock
20	110633	4	NUT
21	8073344	1	NIPPLE .. Close - 3/8
22	100109	4	BOLT .. Pull box to belt rail
23	103319	4	WASHER .. Lock
24	174843	4	NUT
25	8109190	1	GUARD .. Pipe
26	8065074	3	PULLEY .. Corner 90°
27	8117824	1	BRACKET .. Corner pulley
28	123854	8	SCREW .. Flat head slotted
29	8117825	1	BRACKET .. Corner pulley
30	8116870	A. R.	PIPE .. Brass - 3/8 - Approx. x 11 ft. req. - Avail. 12 ft. length
31	8058583	1	UNION .. Female pipe - 3/8
32	8083883	1	VALVE .. Emergency fuel cut-off - See P. L. 729
33	8105937	1	CLAMP .. Pipe - 1 in. wide x 2-1/2 in. long
34	8108299	2	CLAMP .. Tube
35	8108111	2	CLAMP .. Tube

8092732 8044041

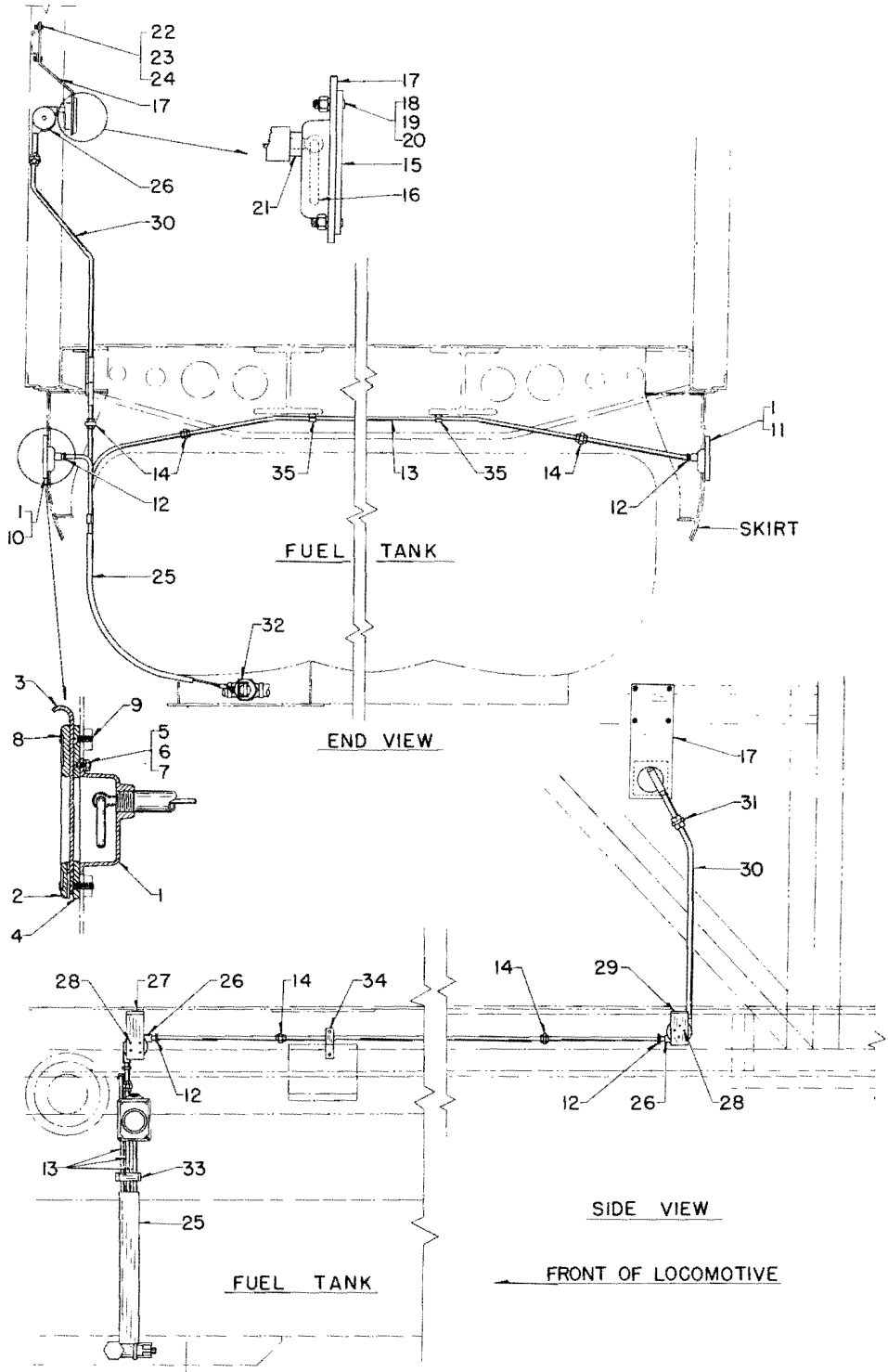
22
23
24
17
26
30
17
18
19
20
15
16
21
1
11
14
35
13
35
14
12
12
1
10
SKIRT
FUEL TANK
25
32
END VIEW
3
9
8
5
6
7
2
1
4
17
31
30
28
27
26
14
34
14
29
12
12
26
28
13
33
25
FUEL TANK
SIDE VIEW
FRONT OF LOCOMOTIVE

PLATE B703-4

Parts List No. C704

FUEL OIL SYSTEM

E3, E4, E5, E6, AND E7 LOCOMOTIVES

PLATE B704-1

Ref. No.	Part Number	No. Req.		Description
		A	-	MODEL E3, E4, E5, AND E6 LOCOMOTIVES
		-	B	MODEL E7 LOCOMOTIVE
1	8101558	1	-	TANK .. Fuel - 1170 gallon
* 2	8083883	1	-	VALVE .. Emergency fuel cut-off - See P. L. 729
* 3	8015236	1	-	COVER .. Sliding
* 4	8015238	1	-	PIN .. Stop - Sliding cover
* 5	8015237	1	-	SPRING .. Sliding cover
* 6	8015776	2	-	PLUG .. Sump drain
* 7	8010874	2	-	GASKET .. Sump drain plug
* 8	187412	2	-	PLUG .. Sump drain - 2 P.T. brass
* 9	8101564	3	-	FLANGE .. Suction pipe stuffing box
*10	8101565	3	-	PACKING .. Suction pipe
*11	179839	6	-	BOLT .. Stuffing box flange - 3/8-16 x 1 hex. hd. - Replaces 100134
*12	114606	6	-	WASHER .. Lock - 3/8 external tooth
13	8178158	-	1	TANK .. Fuel -1200 gallon - Ref. No. 13, 33-38 replace fuel tank 8081977 - See Note 1
*14	8175542	-	1	VALVE ASY. .. Reset cam and
*15	8175543	-	1	VALVE .. Emergency fuel cut-off - See P. L. 729
*16	8175544	-	1	CAM .. Reset
*17	8175545	-	1	AXLE .. Yoke
*18	8175546	-	2	ROLLER
*19	103341	-	2	WASHER .. Plain - 3/8
*20	103384	-	2	PIN .. Cotter - 1/4 x 3/4 in. lg.
*21	8080203	-	2	PLUG .. Sump drain
*22	8010874	-	2	GASKET .. Sump drain plug
*23	8080204	-	2	BOLT .. Retaining - Sump drain plug
*24	119937	-	2	GASKET .. Retaining bolt - 1/2 in.
*25	8101564	-	3	FLANGE .. Suction pipe stuffing box
*26	8101565	-	3	PACKING .. Suction pipe
*27	179839	-	6	BOLT .. Stuffing box flange - 3/8-16 x 1 hex. hd. - Replaces 100134
*28	103321	-	6	WASHER .. Lock - 3/8
*29	8015236	-	1	COVER .. Sliding
*30	8015238	-	1	PIN .. Stop - Sliding cover
*31	8015237	-	1	SPRING .. Sliding cover
*32	110637	-	3	RIVET .. Sliding cover - 1/8 x 5/16 rd. hd.
*33	8161253	-	2	GASKET .. Cover pad - 1-7/8 x 2-1/2 x 1/16
*34	8161254	-	2	GASKET .. Cover pad - 1-7/8 x 3 x 1/16
*35	8178832	-	2	PAD .. Cover
*36	8178833	-	2	PAD .. Cover
*37	179838	-	8	BOLT .. Cover pad - 3/8-16 x 7/8 hex. hd.
*38	103321	-	8	WASHER .. Lock - 3/8

NOTE 1: Improved design tank, 8178158, includes a reset arrangement on the emergency fuel cut-off valve and pads for applying a full length fuel sight gauge if desired. Ref. Nos. 39 through 47 are required to apply full length fuel gauge to the 8178158 tank.

P. L. No. C704

FUEL OIL SYSTEM

Ref. No.	Part Number	No. Req.		Description
		A	-	MODEL E3, E4, E5, AND E6 LOCOMOTIVES (cont'd.)
		-	B	MODEL E7 LOCOMOTIVE (cont'd.)
*39	8171694	-	2	GAUGE .. Full length fuel level - See P. L. 728
*40	8161253	-	2	GASKET .. Upper gauge block - 1-7/8 x 2-1/2 x 1/16
*41	8161254	-	2	GASKET .. Lower gauge block - 1-7/8 x 3 x 1/16
*42	8171661	-	2	GUARD .. Gauge
*43	112593	-	4	BOLT .. Gauge mounting - 3/8-16 x 3-1/4 hex. hd.
*44	100138	-	4	BOLT .. Gauge mounting - 3/8-16 x 2 hex. hd.
*45	103321	-	8	WASHER .. Lock - 3/8
*46	106973	-	8	BOLT .. Guard mounting - 5/16-18 x 1/2 hex. hd.
*47	103320	-	8	WASHER .. Lock - 5/16
*48	8194357	-	2	PLATE .. Calibration
*49	171575	-	12	SCREW .. Calibration plate - 10-32 x 3/8 rd. hd. self-tapping
50	8024047	2	2	PUMP .. Fuel - See P. L. 4110
51	8081492	2	2	FILTER .. Fuel - Replaces Purolator filter 8015685 applied to E3, E4, E5, and E6 locomotives prior to E-490 - See P. L. 738
*52	8033946	2	-	FILTER .. Duplex fuel - Replaces 8015216 - Applied to E3, E4, E5, and E6 locomotives prior to E-490. E6 locomotive after E-490, use 8132295 filter - See P. L. 739
53	8132295	-	2	FILTER .. Fulflo fuel - Replaces 8058354 - See P. L. 732
*54	8059617	2	-	VALVE .. Combination sight glass and relief - Applied to E6 locomotive E-369 to E-417 only - Replaced by 8065068 - E6 locomotive after E-417 use 8065068 valve - See P. L. 734
55	8065068	2	2	VALVE .. Combination sight glass and relief - E6 and E7 locomotive only - See P. L. 734
*56	- - - -	2	2	FILLER .. Fuel tank - See P. L. 726
57	- - - -	2	2	GAUGE .. Fuel tank fuel level - See P. L. 728
58	8015809	2	2	ARRESTOR .. Pipe line flame - See P. L. 740
59	8015690	2	2	GASKET .. Flange
60	8076604	2	2	FLANGE .. 2 in.
61	8095814	-	1	ANGLE .. Support - No. 2 end
62	8095846	-	1	BRACKET .. Support - No. 1 end
*63	8003961	2	-	VALVE .. Relief - 5 lb.
*64	8037889	2	-	VALVE .. Relief - 35 lb.
*65	8123369	-	1	BRACKET .. Fuel pump support
66	8040345	-	2	ELBOW .. Flared tube - 5/8 tube x 3/4 M.P.T.
*67	8040353	-	4	ELBOW .. Flared tube - 5/8 tube x 3/8 F.P.T.
68	8045911	-	3	UNION .. Pipe - 3/4 P.T.
*69	8058480	-	2	BRACKET .. Tubing support
*70	8058485	-	6	CLAMP .. Tube
*71	8058486	-	2	BRACKET .. Tube support
72	8062372	-	2	VALVE .. Solder angle - 1/2 in.
73	8061459	-	6	NIPPLE .. Close pipe - 1/2 P.T.
*74	8061467	-	4	NIPPLE .. Short pipe - 3/8 P.T.
75	8061468	-	2	NIPPLE .. Short pipe - 1/2 P.T.
76	8073299	-	13	NIPPLE .. Close pipe - 1/2 P.T.
77	8062287	-	2	TEE .. Solder - 1/2 in.
*78	8062303	-	2	TEE .. Solder - 2 in. sol. x 1/2 P.T. x 2 in. sol.
79	8065227	-	2	TEE .. Solder - 3/4 in. x 1/2 in.
80	144089	-	6	TEE .. 1/2 P.T. brass

P. L. No. C704

FUEL OIL SYSTEM

Ref. No.	Part Number	No. Req.		Description
		A	-	MODEL E3, E4, E5, AND E6 LOCOMOTIVES (cont'd.)
		-	B	MODEL E7 LOCOMOTIVE (cont'd.)
81	8062374	-	1	ELBOW .. Solder - 1/2 - 90°
82	8062394	-	8	ELBOW .. Solder - 3/4 - 90°
83	8062398	-	2	ELBOW .. Solder - 2 - 90°
84	8062429	-	2	ELBOW .. Solder - 2 - 45°
*85	116453	-	2	ELBOW .. Flared tube - 1/4 tube x 1/4 M.P.T.
86	144283	-	2	ELBOW .. Flared tube - 5/8 tube x 1/2 F.P.T.
87	187459	-	1	ELBOW .. Union - 3/4 - 90°
*88	8062376	4	1	COUPLING .. Solder - 1/2 in.
*89	8062410	-	3	COUPLING .. Solder - 3/4 in.
90	8062419	-	2	COUPLING .. 3/4 in. solder x 3/4 P.T.
91	8062409	2	2	BEND .. Return - 2 in. solder
92	8062490	2	2	UNION .. Solder - 2 in.
*93	118800	4	4	UNION .. Oil gauge connection - 1/4 tube
94	119467	-	4	UNION .. Flared tube - 5/8 tube
95	8058649	-	6	UNION .. Pipe - 1/2 F.P.T. - Replaces 179702
96	8044154	-	1	UNION .. Pipe - 1/2 F.P.T. - Replaces 188068
97	188994	-	1	UNION .. Pipe - 3/4 male and female P.T.
98	8074202	-	2	TEE .. 3/4 solder x 3/4 P.T. x 3/4 solder union
99	8097193	-	4	PLATE .. Spacer
100	109429	-	10	ELBOW .. Flared tube - 5/8 tube x 1/2 M.P.T.
101	116487	-	8	CONNECTOR .. Flared tube - 5/8 tube x 1/2 M.P.T.
102	116488	-	36	NUT .. Flared tube - 5/8 tube
103	118537	-	12	NUT .. Oil gauge connection - 1/4 tube
104	429607	21	18	NUT .. 3/8-16 hex. - Replaces 174847
105	113176	-	4	PLUG .. Pipe - 1/2 P.T. - Brass
106	113177	-	2	PLUG .. Pipe - 3/4 P.T. - Brass
107	144034	3	1	BUSHING .. Reducing - 3/4 P.T. x 1/2 P.T.
108	179803	-	18	BOLT .. 1/4-20 x 1-3/4 hex. hd. - Replaces 100113
109	179839	24	6	BOLT .. 3/8-16 x 1 hex. hd. - Replaces 100134
110	100136	8	8	BOLT .. 3/8-16 x 1-1/2 hex. hd.
111	179838	-	2	BOLT .. 3/8-16 x 7/8 hex. hd. - Replaces 106330
112	179840	-	8	BOLT .. 3/8-16 x 1-1/8 hex. hd. - Replaces 106331
113	179883	8	8	BOLT .. 1/2-13 x 1-1/4 hex. hd. - Replaces 173825
114	190270	-	4	BOLT .. 1/2-13 x 4-1/4 hex. hd. - Replaces 174772
*115	118753	-	1	ELBOW .. Flared tube - 1/4 tube x 1/8 P.T. half union
116	103321	35	32	WASHER .. Lock - 3/8
117	103323	8	12	WASHER .. Lock - 1/2
118	106263	8	10	WASHER .. Plain - 3/8
119	8116511	AR	AR	TUBING .. 1/4 O. D. copper - 50 ft. lg.
120	- - - -	AR	AR	TUBING .. Copper - 5/8 O.D. - 22 ft. req. - Avail. 50 ft. - 8116729
121	- - - -	AR	AR	TUBING .. Copper - 2.375 O.D. - 13 ft. req. - Avail. 20 ft. - 8122502
122	- - - -	AR	AR	TUBING .. Copper - 3/4 in. - 1 ft. req. - Avail. 20 ft. - 8133013
123	- - - -	AR	AR	PIPE .. Brass - 2 in. - 5 ft. req. - Avail. 12 ft. 8116847
124	- - - -	AR	AR	PIPE .. Brass - 1/2 in. - 23 ft. req. - Avail. 12 ft. - 8116871
125	- - - -	AR	AR	PIPE .. Brass - 3/4 in. - 58 ft. req. - Avail. 12 ft. - 8113050
126	- - - -	AR	AR	PIPE .. Steel - 1/2 in. - 4 ft. req. - Avail. 20 ft. - 8116751
*127	8022819	2	-	PAN .. Fuel filter support
128	8095802	-	2	PAN .. Fuel filter support

P. L. No. C704

FUEL OIL SYSTEM

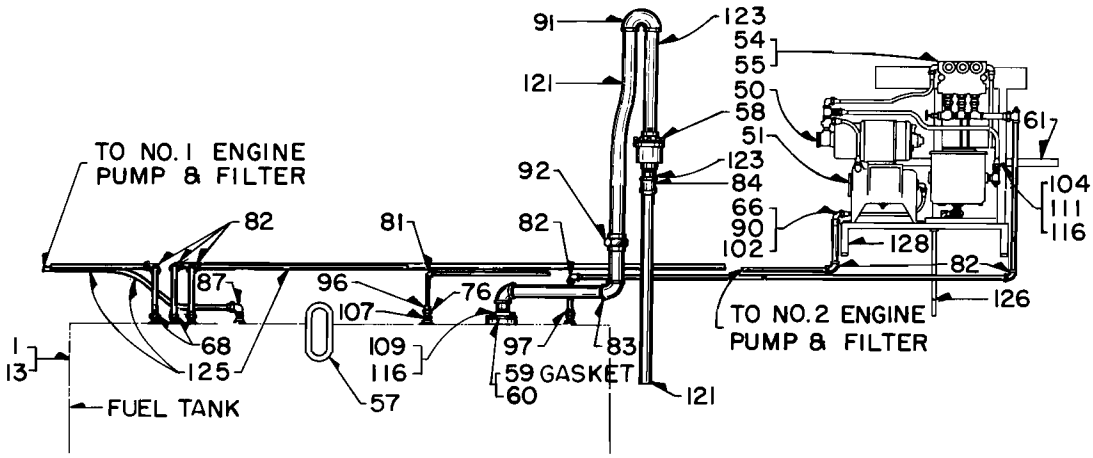

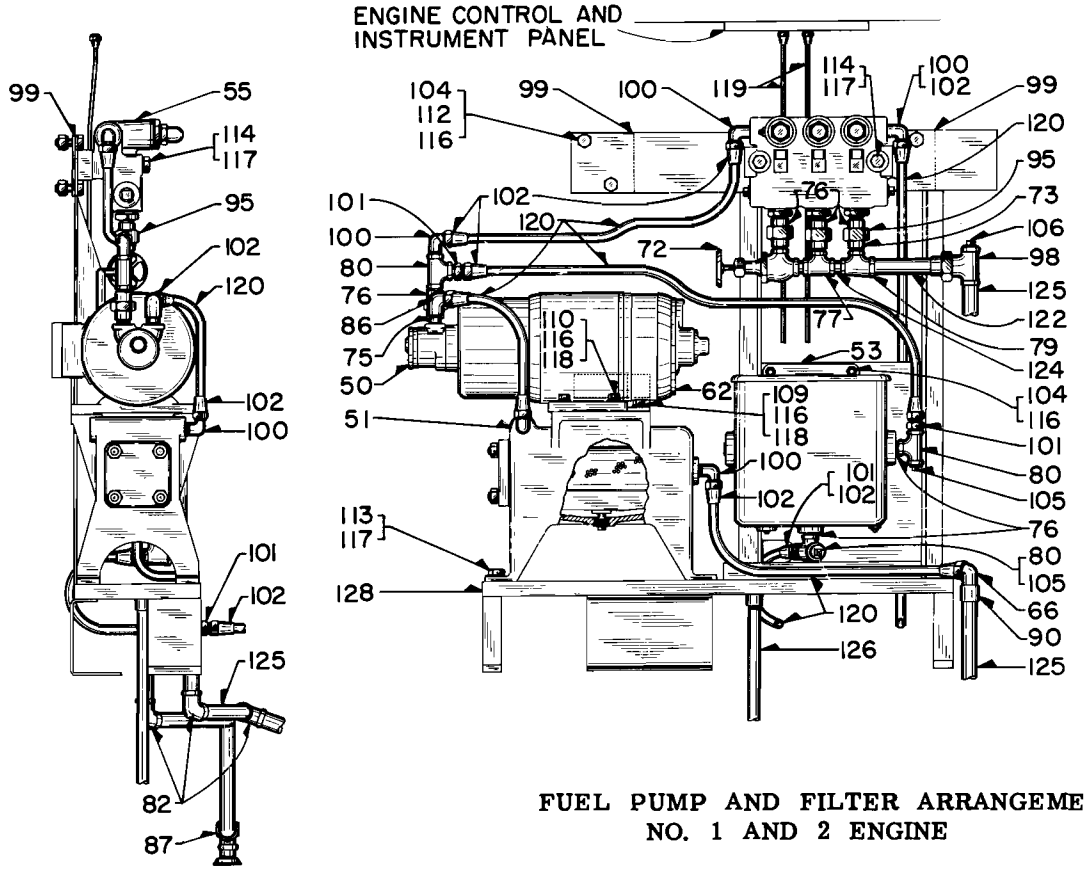

FUEL PUMP AND FILTER ARRANGEMENT
NO. 1 AND 2 ENGINE

FUEL PIPING ARRANGEMENT
E7 LOCOMOTIVE

PLATE B704-1

P. L. No. C704

FUEL OIL SYSTEM
EMERGENCY FUEL CUT-OFF ARRANGEMENT
PLATE B704-2

Ref. No.	Part Number	No. Req.		Description
		A	-	MODEL E3, E4, E5, AND E6 LOCOMOTIVES
		-	B	MODEL E7 LOCOMOTIVE
1	8069331	2	2	BOX .. Pull
2	8107421	2	-	HANDLE .. Pull box - Includes cable 22 ft. lg. - See note
* 3	8113398	-	1	RING ASY. .. Includes cable 6 ft. lg. - R.S. - See note
4	8126886	-	1	RING ASY. .. Includes cable 16 ft. lg. - L.S. - See note
5	8069358	1	-	BOX .. Pull - Located in cab
6	8094336	-	1	BOX .. Pull - Located in cab
7	8104695	1	1	RING ASY. .. Includes cable 41 ft. lg. - See note
+ 8	8083883	1	-	VALVE .. Emergency fuel cut-off - See P. L. 729
+ 9	8175543	-	1	VALVE .. Emergency fuel cut-off - See P. L. 729
10	8015774	2	2	PLATE .. Front
11	8044145	2	2	PLATE .. Slide
12	8044133	2	2	PLATE .. Pull unit mounting
13	8060074	-	1	BRACKET .. Pulley
14	8060075	-	1	BRACKET .. Pulley
15	8060076	-	1	BRACKET .. Pulley
16	8065074	-	3	PULLEY .. Corner
17	8087710	-	2	CHANNEL .. Sump drain
18	8109190	-	1	GUARD .. Pipe
19	8116870	-	AR	PIPE .. 3/8 in. brass - 12 ft.
20	8116868	-	AR	PIPE .. 1/8 in. brass - 12 ft.
*21	8116511	AR	-	TUBING .. 1/4 O.D. copper - 50 ft.
22	8083497	-	1	NIPPLE .. Close pipe - 1/8 P.T.
23	119933	-	7	BUSHING .. Reducing pipe - 3/8 P.T. x 1/8 P.T.
24	179699	2	6	UNION .. Pipe - 1/8 F.P.T.
*25	118537	9	-	NUT .. Flared tube - 1/4 O.D.
*26	118800	3	-	UNION .. Flared tube - 1/4 O.D.
*27	8017639	2	-	CONNECTOR .. Flared tube - 1/4 tube x 3/8 P.T.
*28	125620	1	-	COUPLING .. Female - 1/4 tube x 1/8 P.T.
*29	119932	1	-	BUSHING .. 3/8 x 1/8
30	8058583	-	1	UNION .. Pipe - 3/8 P.T.
31	100803	-	6	SCREW .. Pull box - No. 6-32 x 1/2 flat hd. slotted
32	110532	-	4	SCREW .. Pull box - No. 10-24 x 5/8 flat hd. slotted
33	120221	-	12	SCREW .. Pulley - No. 10 x 1/2 rd. hd.
34	171260	-	4	SCREW .. Pull box - No. 10-24 x 3/4 flat hd. slotted tapping
35	171964	-	8	SCREW .. Front plate - No. 10-24 x 1 oval hd. self-tapping
36	103091	6	6	NUT .. No. 6-32 hex.
37	110633	-	4	NUT .. No. 10-24 hex.
38	120361	-	12	NUT .. Pulley screw - No. 10
39	106495	6	6	WASHER .. Lock - No. 6
40	106497	-	4	WASHER .. Lock - No. 10
41	120217	-	12	WASHER .. Lock - No. 10

NOTE: Pull cable and ring assemblies may be made by ordering Ref. Nos. 42, 43, and 44.

42	8116731	AR	AR	CABLE .. Pull - 1/8 in. - 100 ft.
43	8025393	AR	AR	RING .. Pull
44	8163788	AR	AR	CLAMP .. Cable - Replaces 8095162

8015786 8106957

P. L. No. C704

FUEL OIL SYSTEM

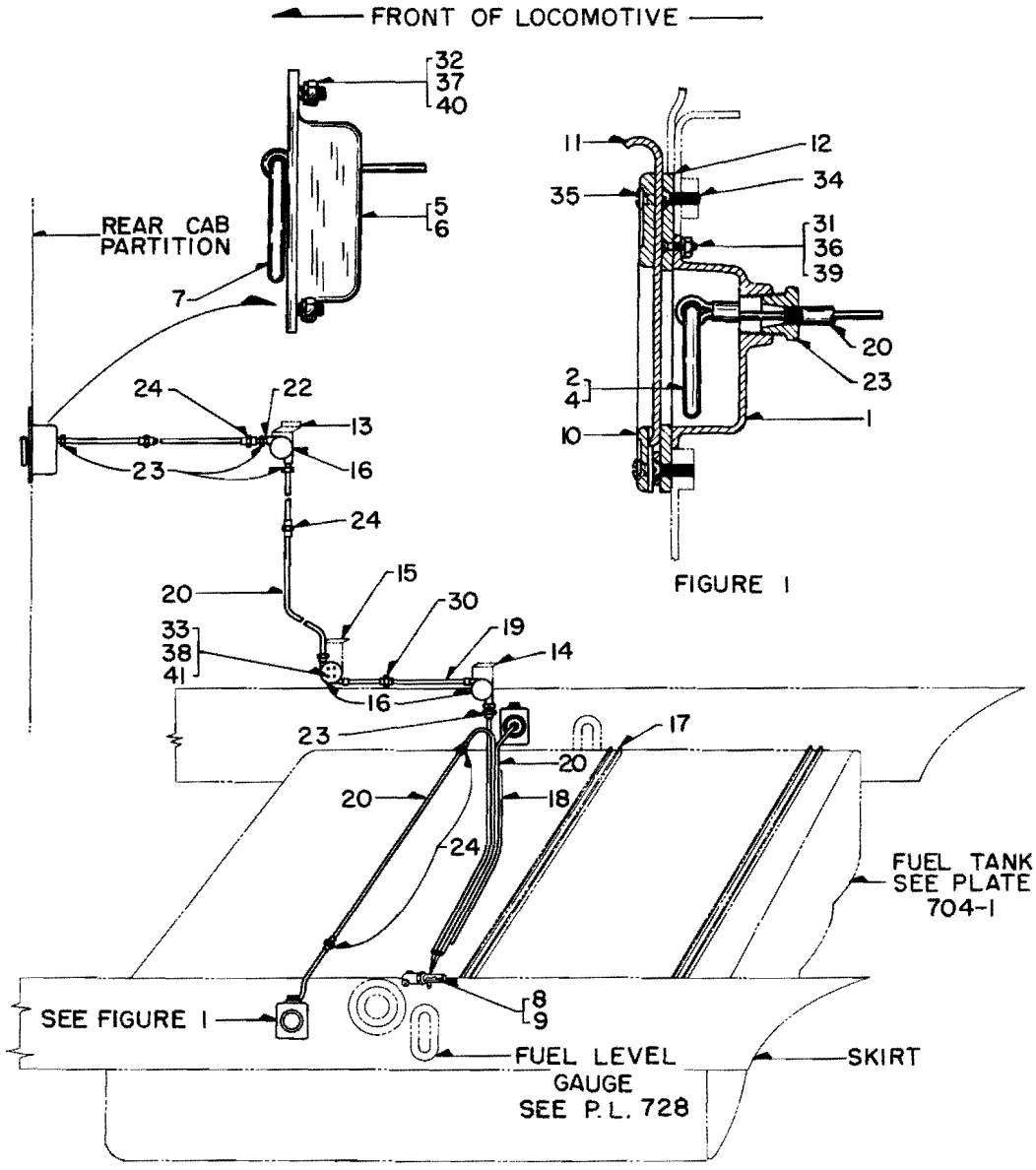

FIGURE 1

EMERGENCY FUEL CUT-OFF ARRANGEMENT

PLATE B704-2

Parts List No. B707

FUEL OIL SYSTEM

E8 LOCOMOTIVE

(Not Illustrated)

Ref. No.	Part Number	No. Req.	Description
			FUEL TANK
1	8171646	1	TANK .. Fuel (1200 gal.) and water (1350 gal.)
2	8050024	4	FLANGE .. 2 in. - Welding
3	187412	4	PLUG .. Fuel oil sump and water sump
4	8080193	1	FLANGE .. Sump drain
5	8080203	1	PLUG .. Sump drain
6	8010874	1	GASKET .. Sump drain
7	8080204	1	SCREW .. Plug retainer
8	119937	1	GASKET .. Plug retainer screw
+ 9	8152343	2	PUMP .. Fuel - Includes motor - See Parts List 4110
+ 10	8147239	2	FILTER .. Fuel - See Parts List 741
11	- - - -	2	RACK .. Equipment - See Parts List 1000
12	- - - -	2	GAUGE .. Fuel level - See Parts List 728
13	- - - -	2	FILLER .. Fuel tank - Protecto seal - See Parts List 726
13A	- - - -	2	FILLER .. Water tank - See Parts List 2303
14	8144932	2	STUD .. Hanger - Fuel tank mounting - 1-1/2-6 x 16-1/2 in. lg.
15	8144930	2	STUD .. Hanger - Fuel tank mounting - 1-1/2-6 x 16 in. lg.
16	8032754	8	NUT .. Hex. - Fuel tank mounting - For studs 8144932 and 8144930
17	8144931	2	SPACER .. Hanger - Left side
18	8144929	2	SPACER .. Hanger - Right side
			ENGINE FEED AND RETURN FUEL LINES
19	8145094	4	PIPE .. Feed lines to engines and boiler - Fuel tank
20	8095254	4	COUPLING .. 3/4 - Tank bottom plate
21	8101563	4	BOX .. Stuffing - Tank top plate
22	8101564	4	FLANGE .. Stuffing box
23	8101565	4	PACKING .. Stuffing box
24	179839	8	BOLT .. Hex. hd. - Stuffing box flange
25	103321	8	WASHER .. Lock
26	144165	1	CAP .. Pipe
27	8062403	2	ELBOW .. 3/4 - Sol. x P.T. - No. 2 engine feed line pipe
28	8147959	1	TUBE .. 3/4 - No. 2 engine feed line pipe elbows
29	144078	1	COUPLING .. No. 1 engine feed line pipe
30	8116886	A.R.	PIPE .. 3/4 I.P.S. - 15 ft. long
31	8040333	2	CONNECTOR .. 5/8 tube x 3/4 P.T.
32	8116729	A.R.	TUBING .. 5/8 O.D. - Fuel line to filters, pump and engine fuel lines - Approx. 30 ft. required - 50 ft. long
33	116488	12	NUT .. Tube - Fuel tank line to fuel filter
34	109429	8	ELBOW .. Fuel filter - Inlets and outlets
35	144308	4	NUT .. Tube - Short - Fuel pump
36	116487	4	CONNECTOR .. Fuel pump
37	8108272	2	CLAMP .. Tubing
38	8108210	2	CLAMP .. Tubing
39	- - - -	-	TUBING .. Engine fuel line - See Parts List 415
40	8088890	2	NIPPLE .. 3/4 x 2 - Threaded one end - Fuel return
41	8045930	2	ELBOW .. 90 ° pipe - Female union - Fuel return
42	8133013	A.R.	TUBING .. 3/4 I.P.S. - Fuel return to fuel tank - Approx. 7 ft. required - 20 ft. long
43	8062394	1	ELBOW .. 3/4 sol.

P. L. No. B707

FUEL OIL SYSTEM

Ref. No.	Part Number	No. Req.	Description
			ENGINE FEED AND RETURN FUEL LINES (Continued)
44	8108126	1	CLAMP .. Fuel return tubing
45	8108116	1	CLAMP .. Fuel return tubing
46	8024709	1	FLANGE .. Fuel return pipe at fuel tank
47	8113926	A.R.	PIPE .. 3/4 I.P.S. - Fuel return to fuel sump - Approx. 2 ft. required - Avail. 20 ft. lg.
			BOILER FEED AND RETURN FUEL LINES
48	8045936	2	ELBOW .. 3/4 union - Sol. x P.T.
49	8133013	A.R.	TUBING .. 3/4 I.P.S. - Boiler fuel feed line - 20 ft. long
50	8062394	3	ELBOW .. 3/4 sol. - Boiler fuel feed line
51	8062410	2	COUPLING .. 3/4 sol.
52	8147197	2	CLAMP .. Boiler fuel feed line
53	8147198	1	CLAMP .. Boiler fuel feed line
54	8147196	3	CLAMP .. Boiler fuel feed and return lines
55	8147195	3	CLAMP .. Boiler fuel feed and return lines
56	8108126	1	CLAMP .. Boiler fuel feed line
57	8108125	1	CLAMP .. Boiler fuel return line
58	8116858	A.R.	TUBING .. 1/2 I.P.S. - Boiler fuel return line - 20 ft. long
59	8062374	2	ELBOW .. 1/2 sol. - Boiler fuel return line
60	8062376	1	COUPLING .. 1/2 sol. - Boiler fuel return line
61	8045929	1	ELBOW .. 1/2 sol. - Union
62	8142370	1	NIPPLE .. 1/2 sol. x 1/2 P.T. x 5-1/2 - Elbow to fuel tank
63	8086257	1	FLANGE .. 1/2 welding - Fuel tank
			FUEL LINE TO PANEL GAUGE ASSEMBLY
64	8116832	A.R.	PIPE .. 3/8 I.P.S. - Fuel line to gauge - 20 ft. long Avail. 20 ft. lg. 8116832
65	8040350	1	ELBOW .. Tube - 3/8 T. x 3/8 F.P.T.
66	8116856	A.R.	TUBING .. 3/8 O.D. - Fuel gauge feed - 25 ft. long
67	118539	8	NUT .. Gauge fuel line
68	118812	2	ELBOW .. Gauge fuel line
69	118760	1	TEE .. Fuel line and air system - See Parts Group 1050
70	8146770	1	GAUGE .. Fuel
71	8108202	2	CLAMP .. Tube
72	- - - -	1	CLAMP ASSEMBLY .. Tube
73	8064118	1	CLAMP .. Tube
74	8110847	1	ANGLE .. Backing
75	451395	1	NUT .. Hex.
76	106319	1	SCREW .. Adjusting
77	103319	1	WASHER .. Lock
78	8108263	3	CLAMP .. Tube
			FLAME ARRESTOR PIPING
79	8059706	2	FLANGE .. Bolting - Fuel tank vent line - R.H. and L.H.
80	8015690	2	GASKET .. Flange

P. L. No. B707

FUEL OIL SYSTEM

Ref. No.	Part Number	No. Req.	Description
			FLAME ARRESTOR PIPING (Continued)
81	8165696	2	FLANGE .. 2 P.T.
82	179839	8	BOLT .. Hex. hd.
83	103321	8	WASHER .. Lock
84	8060937	2	NIPPLE .. 2 close
85	189777	2	ELBOW .. 2 P.T.
86	8116748	A.R.	PIPE .. 2 I.P.S. - Approx. 4-1/8 ft. required - 20 ft. long
87	8042859	2	TEE .. 2 x 1/2 x 2 P.T.
88	8145288	2	PIPE .. Fuel tank vent - R.H. and L.H.
89	8044158	2	UNION .. 2 P.T.
90	8145284	2	PIPE .. Fuel tank vent - R.H. and L.H.
91	218835	2	BEND .. Return
92	8167296	2	ARRESTOR .. Fire - 2 P.T. - See Parts List 740
93	8145285	2	PIPE .. Fuel tank vent - R.H. and L.H.
94	8116750	A.R.	PIPE .. 3 I.P.S. - Approx. 4 ft. required - 20 ft. long
95	8147199	2	CLAMP .. Fuel tank vent pipe
96	8108130	4	CLAMP .. Fuel tank vent pipe
97	8116856	A.R.	TUBING .. 3/8 O.D. - Tee to fuel gauge - R.H. and L.H. - Approx. 13 ft. required -25 ft. long
98	- - - -	2	GAUGE .. Fuel level - See Parts List 728
99	118539	4	NUT .. Tube
100	8039169	2	ELBOW .. 3/8 T. x 3/8 P.T. - Tubing to fuel gauge
101	8106951	2	NIPPLE .. 3/8 close - Piping to fuel tank
102	8062393	2	ELBOW .. 3/8 solder - Piping to fuel tank
103	8116870	A.R.	PIPE .. 3/8 I.P.S. - Approx. 10-1/2 ft. required - 12 ft. long
104	8062462	2	ELBOW .. Union - 3/8 solder
105	8049244	1	TEE .. 3/8 solder
106	8062461	1	ELBOW .. Union - 3/8 solder
107	8059609	1	FLANGE .. Welding - Fuel tank

P. L. No. B707

FUEL OIL SYSTEM
EMERGENCY FUEL CUT-OFF

(Not Illustrated)

Ref. No.	Part Number	No. Req.	Description
1	8094336	1	BOX .. Pull - Emergency fuel cut-off - Located in the operating cab of "A" unit
2	8116870	A.R.	PIPE .. 3/8 I.P.S. - Approx. 1-3/4 ft. required - 12 ft. long
3	171256	4	SCREW .. Flat hd. - Pull box
4	8025393	1	RING .. Pull
5	8116731	A.R.	CABLE .. Flexible - Emergency fuel cut-off - 100 ft. long
6	8163788	2	CLAMP .. Cable
7	8058583	1	UNION .. 3/8 P.T.
8	144608	1	NIPPLE .. 3/8 P.T.
9	8149945	1	BRACKET .. Pulley
10	8065074	1	PULLEY .. Corner
11	133556	4	SCREW .. Flat head - Pulley bracket
12	119933	1	BUSHING .. Reducing
13	8116868	A.R.	PIPE .. 1/8 I.P.S. - Approx. 30 ft. required - 12 ft. long
14	179699	5	UNION .. 1/8 P.T.
15	8108111	4	CLAMP .. Pipe
16	8065074	1	PULLEY .. Corner
17	8133820	1	BRACKET .. Pulley
18	133556	4	SCREW .. Flat head
19	119933	2	BUSHING .. Reducing
20	144587	2	NIPPLE .. 1/8 I.P.S.
21	8108205	3	CLAMP .. Pipe hanger
22	8133819	1	BRACKET .. Pulley
23	8065074	1	PULLEY .. Corner
24	133556	4	SCREW .. Flat head
25	119933	2	BUSHING .. Reducing
26	450512	1	NIPPLE .. 1/8 P.T.
27	8069331	2	BOX .. Pull - Emergency fuel cut-off - Flush type
28	8145095	2	PLATE .. Pull box front
29	8145096	2	PLATE .. Pull box cover
30	187335	8	SCREW .. Oval hd. - Mounting plate to car body
31	133432	6	SCREW .. Flat head - Pull box to mounting plate
32	131044	6	WASHER .. Lock
33	134530	6	NUT .. Hex.
34	8025393	2	RING .. Pull
35	8163788	4	CLAMP .. Cable
36	8116731	A.R.	CABLE .. Flexible - Emergency fuel cut-off - Approx. 32 ft. required - Avail. 100 ft. lg.
37	119933	6	BUSHING .. Reducing - Pull box
38	144587	3	NIPPLE .. Reducing bushing
39	179699	4	UNION .. Nipple to pipe
40	8116868	A.R.	PIPE .. 1/8 I.P.S. - Approx. 14 ft. required - 12 ft. long
41	8065074	2	PULLEY .. Corner
42	8133818	2	BRACKET .. Pulley
43	133556	8	SCREW .. Flat head
44	8133828	1	CLAMP .. Pipe

P. L. No. B707

FUEL OIL SYSTEM
EMERGENCY FUEL CUT-OFF

Ref. No.	Part Number	No. Req.	Description
45	8124460	1	ANGLE .. Welded
46	8133823	1	LEVER .. Emergency fuel cut-off
47	8133825	1	PIN .. Cut-off lever
48	103362	1	PIN .. Cotter
49	106261	2	WASHER .. Plain
50	8133824	1	FLANGE .. Cut-off lever
51	179837	2	BOLT .. Hex. hd.
52	103321	2	WASHER .. Lock
53	8133826	1	PAD .. Tapping - Welded
54	8141740	1	ROD .. Reset
55	8141741	1	NIPPLE .. 3/4 I.P.S. - Reset rod
56	119102	1	CAP .. Reset rod nipple
57	8141742	1	RING .. Seal - Reset rod nipple
58	8133827	1	SUPPORT .. Reset rod
59	8116926	A.R.	PIPE .. 3/4 I.P.S. - Reset rod - Approx. 2 ft. required - 20 ft. long
60	429608	1	NUT .. Hex. - Reset rod
61	8116937	A.R.	PIPE .. 1 I.P.S. - Approx. 3/4 ft. required - 20 ft. long
62	8044156	2	UNION .. 1 inch - Fuel sump
63	8060975	4	NIPPLE .. 1 inch - Fuel sump
+ 64	8144807	1	VALVE .. Emergency fuel cut-off - See Parts List 729
65	8042827	1	ELBOW .. 90 ^{o} - Fuel sump
66	8125229	1	NIPPLE .. 1 in. - Fuel sump
67	8042836	1	TEE .. 1 inch - Fuel sump
68	113178	1	PLUG .. 1 inch - Fuel sump
69	8058701	1	FLANGE .. 1 in. - Welding - Fuel sump

Parts List No. A708

FUEL OIL SYSTEM
MODEL SW8 LOCOMOTIVE
PLATE A708-1

Ref. No.	Part Number	No. Req.	Description
			FUEL TANK
1	8161020	1	TANK .. Fuel - 600 gal.
* 2	103868	2	PLUG .. Pipe
3	8165240	1	PUMP .. Fuel - (Includes motor) - See Parts List 4110
4	8147239	1	FILTER .. Fuel - See Parts List 741
* 5	- - - -	1	RACK .. Equipment - See Parts List 1000
6	8161177	2	GAUGE .. Fuel level - See Parts List 728
7	8008584	2	FILLER .. Tank (Protecto seal) See Parts List 726
8	173825	8	BOLT .. Hex. head - Fuel tank filler
9	173951	4	BOLT .. Hex. head - Fuel filler flange to underframe
10	173955	26	BOLT .. Hex. head - Fuel tank flange to underframe
11	173687	30	NUT .. Hex. - Fuel tank flange to underframe
12	103325	30	WASHER .. Lock - Fuel tank flange to underframe
12A	103323	8	WASHER .. Lock - Fuel tank filler to underframe
13	8015059	1	DRAIN ASSEMBLY . Fuel tank
14	8018825	1	BUSHING .. Tank drain
15	8010874	1	GASKET .. Drain plug
16	8018824	1	PLUG .. Drain
17	103420	1	PIN .. Cotter - Drain plug
			FLAME ARRESTOR PIPING
18	- - - -	A.R.	PIPE .. 2 I.P.S. - Approx. 24 ft. req. - Avail 20 ft. lg. 8116748
19	8044158	2	UNION .. 2 P.T. - Fuel tank to return bend
20	218835	2	BEND .. Return - 2 P.T.
21	8108224	2	CLAMP ASSEMBLY .. Single pipe - Upper
22	8117949	2	CLAMP ASSEMBLY .. Double pipe - Lower
23	8167296	2	ARRESTOR .. Flame - See Parts List 740
24	219535	2	NIPPLE .. 2 P.T. x 6 inches long - Arrestor to union
25	8044158	2	UNION .. 2 P.T. - Flame arrestor
26	189777	4	ELBOW .. 2 P.T. - Flame arrestor
			TANK TO PUMP PIPING
27	189367	1	BUSHING .. Ecc. red. - 2-1/2 x 1 P.T.
28	8060975	2	NIPPLE .. 1 x 2 P.T.
29	8045220	2	ELBOW .. Union
30	- - - -	A.R.	PIPE .. 1 I.P.S. - Approx. 40 in. req. - Avail. 20 ft. lg. 8116937
31	219354	1	NIPPLE .. 1 P.T. x 8 inches
32	8083883	1	VALVE .. Safety cutoff - See Parts List 729
33	119100	1	ELBOW .. 90 degree - 1 P.T.
34	189368	1	ELBOW .. Reducing - 90 degree 1 x 1/2 P.T.
35	187249	1	NIPPLE .. 1/2 P.T. x 7 inches
* 36	8108215	1	CLAMP ASSEMBLY .. Single pipe
37	- - - -	A.R.	PIPE .. 1/2 I.P.S. - Approx. 93 in. req. - Avail. 20 ft. lg. 8116751
38	8042834	1	TEE .. 1/2 P.T.
39	103868	1	PLUG .. Pipe
40	119098	2	ELBOW .. 1/2 P.T.
41	- - - -	A.R.	TUBING .. 5/8 O.D. - Avail. 50 ft. length 8116729
42	116488	10	NUT .. Flared tube
	8161634		

P. L. No. A708

FUEL OIL SYSTEM
MODEL SW8 LOCOMOTIVE

Ref. No.	Part Number	No. Req.	Description
			TANK TO PUMP PIPING (Cont'd.)
43	116487	3	CONNECTOR .. Tube to pipe 5/8 tube x 1/2 P.T.
44	109429	5	ELBOW .. 5/8 tube x 1/2 P.T.
45	144089	1	TEE .. 1/2 P.T.
46	103868	1	PLUG .. Pipe
47	8153625	1	NIPPLE .. 1/2 P.T. x 9-1/2 inches
48	8040352	2	ELBOW .. 1/2 tube x 1/2 F.P.T.
49	- - - -	A.R.	TUBING .. 1/2 O.D. - Approx. 30 in. req. - Avail. 50 ft. lg. 8116730
50	118541	2	NUT .. Flared tube
* 51	8108197	1	CLAMP ASSEMBLY .. 1/2 pipe
52	8010263	2	BOX .. Emergency fuel cut off safety station
53	8021549	2	PLATE .. Name - Safety station box
54	100816	8	SCREW .. Name plate
55	8161646	1	RING ASSEMBLY .. Pull - Includes 17 ft. of cable - Left side of locomotive
56	8161647	1	RING ASSEMBLY .. Pull - Includes 10 ft. of cable - Right side of locomotive
57	8161524	1	RING ASSEMBLY .. Pull - Includes 21 ft. of cable - Cab mounted
* 58	8163788	2	CLAMP .. Cable
59	8065074	3	PULLEY .. Cable - Enclosed corner
* 60	- - - -	A.R.	PIPE .. 1/8 I.P.S. - Approx. 27-3/4 ft. req. - Avail. 12 ft. lg. 8116868
* 61	119933	5	BUSHING .. 3/8 x 1/8 P.T.
* 62	119928	1	BUSHING .. 3/8 x 1/4 P.T.
* 63	179699	2	UNION .. 1/8 P.T.
* 64	144074	1	NIPPLE .. 1/8 P.T. x 12 inches
* 65	450512	1	NIPPLE .. 1/8 P.T. x 12 inches
* 66	8118880	1	NIPPLE .. 1/4 P.T. x 9-1/2 inches
* 67	8161651	1	BRACKET .. Cable pully - "S" shape for side cables
* 68	8161652	1	BRACKET .. Cable pully - "U" shape for cab cable
* 69	8108111	3	CLAMP ASSEMBLY .. Crossover cable pipe
* 70	106962	3	SCREW . Cap
* 71	103319	3	WASHER .. Lock
* 72	8108202	1	CLAMP ASSEMBLY .. Cab cable pipe - Includes hanger
* 73	106320	1	BOLT
* 74	174843	1	NUT
* 75	103319	1	WASHER .. Lock
* 76	8108262	2	CLAMP ASSEMBLY .. Crossover to cut off valve cable pipe
* 77	174847	2	NUT
* 78	103321	2	WASHER .. Lock

NOTE: See Parts List Number 415 for engine fuel oil lines and injector.

P. L. No. A708

FUEL OIL SYSTEM
MODEL SW8 LOCOMOTIVE

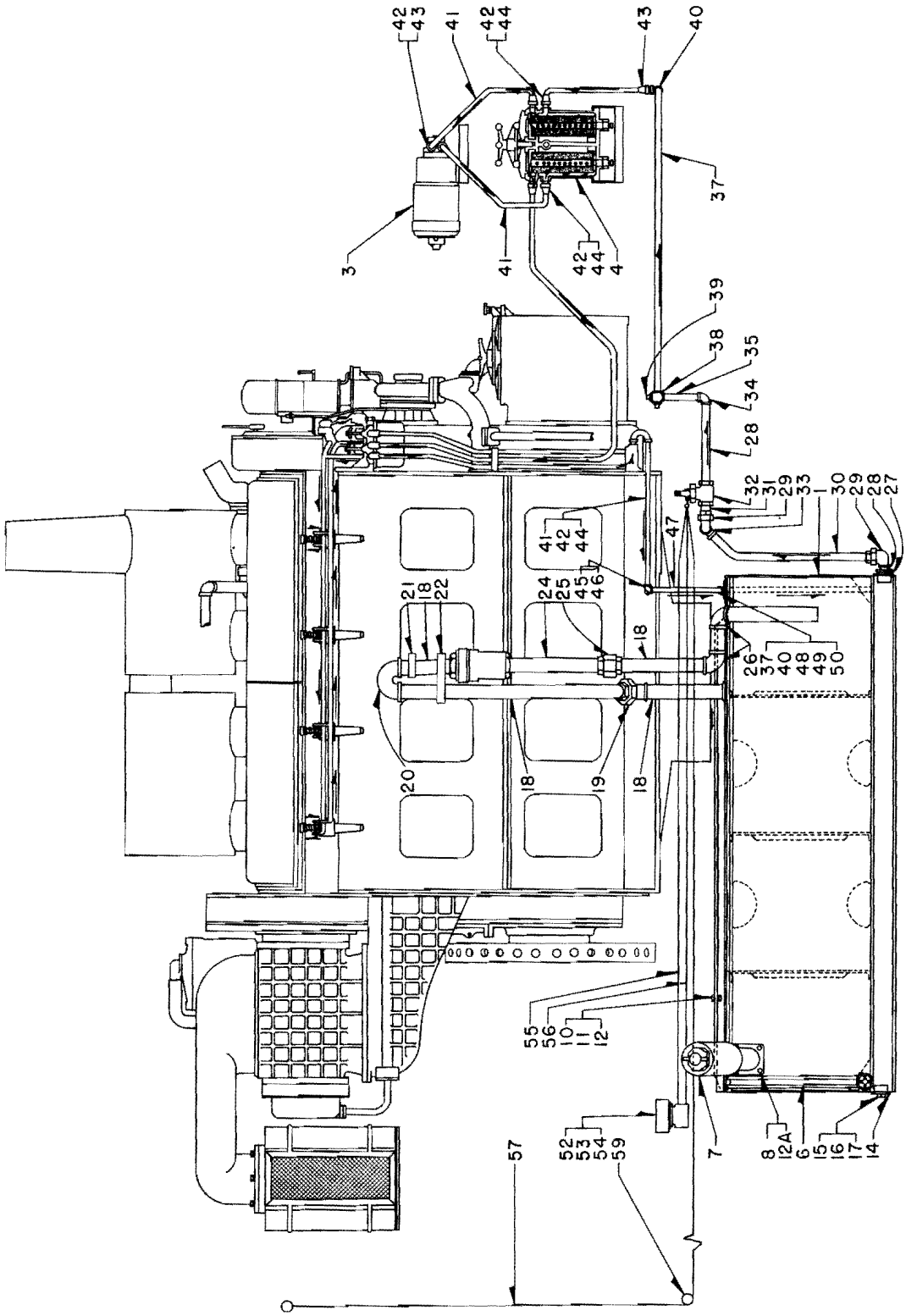

PLATE A708-1

Parts List No. B709

FUEL OIL SYSTEM

FUEL TANK - GP LOCOMOTIVE

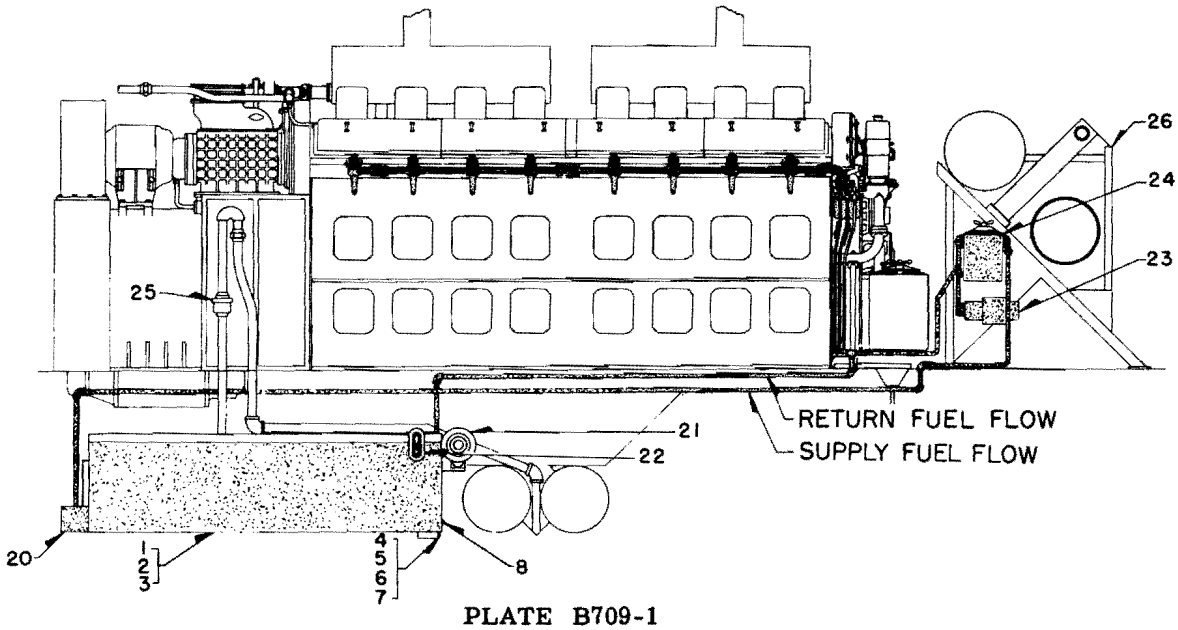

PLATE B709-1

Ref. No.	Part Number	No. Req.			Description
FUEL TANK . . GP Locomotive					
1	8158688	1	-	-	TANK . . Fuel - 800 gal.
2	8159207	-	1	-	TANK . . Fuel - 1200 gal.
3	8176227	-	-	1	TANK . . Fuel - 1600 gal.
4	8080203	1	1	1	PLUG . . Tank drain
5	8010874	1	1	1	GASKET . . Drain plug
6	8080204	1	1	1	SCREW . . Drain plug retaining
7	119937	1	1	1	GASKET . . Retaining screw
8	431622	1	1	1	PLUG . . Pipe - Located above drain plug
9	103869	1	1	1	PLUG . . Pipe - Located at top of tank
*10	8144262	2	2	-	SUPPORT . . Fuel tank - Rear of tank
*11	8176755	-	-	2	SUPPORT . . Fuel tank - Rear of tank
*12	272560	-	-	2	BOLT . . Tank supporting rear - 5/8-11 x 1-3/4 hex. hd.
*13	271613	4	4	4	BOLT . . Tank supporting rear - 3/4-10 x 2-1/2 in. hex. hd. - Replaces 174017
*14	271612	6	6	-	BOLT . . Tank mounting rear - 3/4-10 x 2-1/4 in. hex. hd. - Replaces 174016
*15	271710	2	2	-	BOLT . . Tank support mounting rear - 5/8-11 x 1-3/4 in. hex. hd.
*16	8192156	10	10	-	NUT . . Lock - 3/4-10 hex. - Replaces 8085545
*17	8192158	2	2	-	NUT . . Lock - 1-8 hex.
*18	8032748	-	-	10	NUT . . Lock - 3/4-10 hex.
*19	8032750	-	-	2	NUT . . Lock - 1-8 hex.
20	8175543	1	1	1	VALVE . . Emergency cut-off - Formerly 8083883 - See P. L. 729
21	8094697	2	2	2	FILLER . . Fuel oil - See P. L. 741
22	- - - -	2	2	2	GAUGE . . Fuel tank level - See P. L. 728
FUEL PUMP AND FILTER					
23	8080384	1	1	1	PUMP . . Fuel - Includes motor - See P. L. 4110
24	8147239	1	1	1	FILTER . . Fuel oil - See P. L. 741
25	8167296	2	2	2	ARRESTOR . . Pipe line flame - See P. L. 740
26	- - - -	1	1	1	RACK . . Equipment - See P. L. 1000

P. L. No. B709

FUEL OIL SYSTEM

GP LOCOMOTIVE

(Not Illustrated)

Ref. No.	Part Number	No. Req.	Description
FLAME ARRESTOR PIPING . . 800-1200 and 1600 Gal. Tank			
1	8020816	1	FLANGE . . Fuel tank vent
2	8021453	1	GASKET . . Fuel tank vent flange
3	179885	4	BOLT . . Flange to fuel tank - 1/2-13 x 1-1/2 hex. hd. - Replaces 173827
4	103323	4	WASHER . . Lock - 1/2
5	8062303	1	TEE . . Fuel vent line - 2 sol. x 1/2 P. T. x 2 sol.
6	- - - -	A. R.	PIPE . . Elbow to return bend - 2 I. P. S. - Approx. 38 in. req. - Available 20 ft. lg. - 8122502
7	8062398	1	ELBOW . . Fuel vent line - 2 in. sol.
8	8159142	1	PIPE . . Tank vent to elbow
9	8108238	1	CLAMP . . Pipe - Short hanger single pipe
10	8044171	2	ELBOW . . Union - 2 in. P. T.
11	- - - -	A. R.	PIPE . . Elbow to return bend - 2 I. P. S. - Approx. 33 in. req. - Available 20 ft. lg. - 8116748
12	218835	1	BEND . . Return - Flame arrestor
13	8159143	1	PIPE . . Return bend to flame arrestor
14	8117949	1	CLAMP . . Pipe - Double pipe - Flame arrestor
15	8167296	1	ARRESTOR . . Flame - See Parts List No. 740
16	219533	1	NIPPLE . . Flame arrestor to elbow - 2 P. T. x 5
17	8159144	1	PIPE . . Union elbow to elbow
18	8108239	1	CLAMP . . Pipe - Long hanger single pipe
19	189777	2	ELBOW . . 2 in. P T.
20	451805	1	NIPPLE . . 2 in. P.T. x 11-1/2 in.
21	- - - -	A. R.	PIPE . . Elbow to tee and tee to union - Available 20 ft. lg. - 8116748
22	218608	1	TEE . . 1-1/2 x 1-1/2 x 2 P. T.
23	8060935	1	NIPPLE . . Close - 1-1/2 P. T.
24	8062515	2	UNION . . 1-1/2 P. T.
25	8159656	2	PIPE . . Plame arrestor outlet - 1-1/2 P. T.
26	8146725	2	CLAMP . . Flame arrestor outlet
FUEL TANK OIL LEVEL GAUGE PIPING . . 800-1200 and 1600 Gal. Tank			
27	8040397	1	TEE . . Flame arrestor - 3/8 flared tube
28	8108202	1	CLAMP . . Fuel oil vent and return
29	8039169	4	ELBOW . . Fuel gauge vent - 3/8 tube x 3/8 male P. T.
30	118539	8	NUT . . Flared tube - 3/8
31	8040313	2	CONNECTOR . . Flared
32	- - - -	A. R.	TUBING . . Copper - Fuel oil vent and return - 3/8 in. - Available 25 ft. lg. - 8116856
FUEL TANK TO PUMP PIPING . . 800-1200 and 1600 Gal. Tank			
33	8113470	1	NIPPLE . . Tank to elbow - 1 inch
34	8045931	1	ELBOW . . Union - Fuel tank to nipple - 1 inch
35	8061461	1	NIPPLE . . Elbow to fuel cut-off - 1 inch
36	8175543	1	VALVE . . Emergency cut-off - Formerly 8083883
37	8158462	1	MANIFOLD . . Suction - Emergency fuel cut-off
38	8108216	1	CLAMP . . Suction manifold

P. L. No. B709

FUEL OIL SYSTEM

Ref. No.	Part Number	No. Req.	Description
39	8133580	1	CAP .. Pipe - Suction manifold - 1 inch
40	144170	1	CAP .. Pipe - Suction manifold - 3/4 inch
41	8158411	1	GUARD ASSEMBLY .. Fuel cut-off
42	179814	6	BOLT .. Hex. hd. - 5/16-18 x 5/8 - Replaces 106324
43	103320	6	WASHER .. Lock - 5/16
44	8045911	1	UNION .. Suction manifold to line - 3/4 P. T. sol.
45	- - - -	A. R.	TUBING .. Copper - Suction fuel line - 3/4 I. P. S. - Available 20 ft. lg. - 8133013
46	8108129	3	CLAMP .. Pipe - Located above fuel cut-off guard
47	8045930	1	ELBOW .. Union - 3/4 in. sol.
48	8062410	1	COUPLING .. 3/4 in. sol.
49	8062394	2	ELBOW .. 3/4 P. T.
50	8062403	1	ELBOW .. 3/4 P. T. x 3/4 in. sol.
51	8040322	1	CONNECTOR .. 3/4 P. T. x 5/8 tube
52	- - - -	A. R.	TUBING .. Copper - 5/8 O. D. - Elbow to dual fuel filter - Filter to pump - Filter to engine - Available 50 ft. lg. - 8116729
53	116488	8	NUT .. Flared tube - 5/8
54	8108209	2	CLAMP .. 5/8 - Suction line
55	109429	4	ELBOW .. Dual fuel filter - 5/8 tube x 1/2 P. T.
56	116487	2	CONNECTOR .. Fuel pump - 5/8 tube
57	8147239	1	FILTER .. Dual fuel - See P. L. 741
58	8080384	1	PUMP .. Fuel - Includes motor - See P. L. 4100
59	8108211	1	CLAMP .. Filter to engine line
60	8040345	1	ELBOW .. Engine fuel line - 3/4 P. T. x 5/8 tube
61	- - - -	1	RACK .. Equipment - See P. L. 1000

ENGINE FUEL RETURN PIPING

62	8088890	1	NIPPLE .. Engine to elbow - 3/4 P. T. x sol.
63	8045930	1	ELBOW .. Sol. union 3/4 inch
64	- - - -	A. R.	TUBING .. Copper - 3/4 I. P. S. - Available 20 ft. lg. - 8133013
65	8062394	1	ELBOW .. Sol. 3/4 in.
66	8146725	2	CLAMP .. Pipe 3/4
67	8045930	1	ELBOW .. Union - Tubing to nipple - 3/4 sol.
68	8154262	1	NIPPLE .. Fuel tank flange - 3/4 P. T. x sol. x 7-1/2 in.
69	8157781	10	CLAMP .. Open end insulation
70	- - - -	A. R.	TAPE .. Insulation - 3/16 x 1-9/16 - Available 50 ft. lg. - 8105873

EMERGENCY FUEL CUT-OFF PIPING . . 800-1200 and 1600 Gal. Tank

71	8069331	2	BOX .. Emergency fuel cut-off - Flush type
72	8015774	2	PLATE .. Front - Pull box
73	8044145	2	PLATE .. Slide - Pull box
74	171964	4	SCREW .. Oval head - Self-tapping - 10-24 x 1 inch
75	8044133	2	PLATE .. Mountine - Pull out
76	171260	2	SCREW .. Mounting plate - 10-24 x 3/4 in. flat hd.
77	100803	6	SCREW .. Pull box mounting - 6-32 x 1/2 in. flat hd.
78	103091	6	NUT .. 6-32 hex.
79	106495	6	WASHER .. Lock - No. 6
80	8126886	3	CABLE ASSEMBLY .. Includes pull ring
81	119933	7	BUSHING .. Reducing - 3/8 P. T. x 1/8 P. T.
82	179699	7	UNION .. Cut-off pipe assembly - 1/8 P. T.
83	8108111	5	CLAMP .. Pipe - 3/8

P. L. No. B709

FUEL OIL SYSTEM

Ref. No.	Part Number	No. Req.	Description
84	142853	2	NIPPLE .. Brass - 3-1/2 in. lg. x 1/8 P. T.
85	8065074	4	PULLEY .. Corner cable
86	8173447	4	WHEEL .. Pulley
87	8209389	4	COVER .. Pulley wheel
88	8061465	2	NIPPLE .. Short - 1/8 P. T.
89	8108202	1	CLAMP .. Cut-off pulley - 1/8 pipe
90	8148265	1	BRACKET .. Corner pulley
91	123854	4	SCREW .. Bracket to pulley - 10-24 x 1/2 flat hd.
92	8058583	1	UNION .. 3/8 in.
93	133567	8	SCREW .. Bracket to pulley - 10-24 x 5/8 flat hd.
94	120361	8	NUT .. 10-24 hex.
95	120217	8	WASHER .. Lock - No. 10
96	8159218	1	NIPPLE .. 3/8 P. T. x 1 in. lg.
97	8159219	1	NIPPLE .. 3/8 P. T. x 3-1/2 in. lg.
98	8159220	1	NIPPLE .. 3/8 P. T. x 6 in. lg.
99	8038583	5	NUT .. Lock - Conduit - 3/8
100	- - - -	A. R.	TUBING .. Copper - 3/8 - Available 25 ft. lg. - 8116856
101	- - - -	A. R.	PIPE .. 1/8 - Available 12 ft. lg. - 8116868
102	8148260	1	BLOCK .. Pull box - Cab mounted
103	177996	4	SCREW .. Pull box - Mounting cab - 10-24 x 1-3/4 flat hd.

AIR OPERATED FUEL GAUGE PIPING .. 800-1200 and 1600 Gal. Tank

104	8040313	1	CONNECTOR .. Fuel tank - 3/8 tube x 3/8 P. T.
105	- - - -	A. R.	TUBING .. Copper - 3/8 - Available 25 ft. lg. - 8116856
106	118539	10	NUT .. Flared tube - 3/8
107	118812	1	ELBOW .. Tube - 3/8
108	8108111	2	CLAMP .. Short - 3/8 pipe
109	8108205	2	CLAMP .. Long - 3/8 pipe
110	118802	1	UNION .. Tube - 3/8
111	118755	2	ELBOW .. Tube - 3/8 O. D. x 1-1/4 M. P. T.
112	8039024	1	CHAMBER .. Surge
113	118750	1	CONNECTOR .. Tube - 3/8 O. D. x 1/4 P. T.
114	8148376	1	BRACKET .. Gauge
115	113956	4	SCREW .. Gauge mounting - 1/4-20 x 5/8 rd. hd.
116	103319	4	WASHER .. Lock - 1/4
117	8090487	3	GROMMET .. 3/8 O. D.
118	8148126	1	GAUGE .. Fuel oil level - Air operated - See P. L. 725

Parts List No. B710

FUEL OIL SYSTEM

SD7 AND SD9 LOCOMOTIVE

PLATE B710-1

Ref. No.	Part Number	No. Req.	Description
TANK . . Fuel Oil - 1200 Gallon			
1	8191699	1	TANK . . Fuel oil - 1200 gallon - Formerly 8182154
2	103869	2	PLUG . . Pipe - 3/4 P. T.
* 3	143935	1	PLUG . . Pipe - 1/2 P. T.
* 4	143939	1	PLUG . . Pipe - 1-1/2 P. T.
5	8080203	1	PLUG . . Drain - 1-14 x 4
6	8010874	1	GASKET . . Drain plug
* 7	8080204	1	SCREW . . Retaining - 1/2-13 x 1-1/4 hex. hd.
* 8	119937	1	GASKET . . Screw retaining
GAUGE ASSEMBLY . . Fuel Level			
9	- - - - -	2	GAUGE ASSEMBLY . . Fuel level - See P. L. 728
10	8176364	2	GAUGE ASSEMBLY . . Fuel level - Full length fuel tank level gauge-See P. L. 728
FILLER . . Fuel Tank			
11	8094697	2	FILLER . . Fuel tank - See P. L. 726
ARRESTOR . . Flame			
12	8167296	2	ARRESTOR . . Flame - See P. L. 740
FLAME ARRESTOR PIPING			
13	8129685	2	NIPPLE . . Short pipe - 2 P. T. x Sol.
14	219539	2	NIPPLE . . 2 P. T. x 8
15	8108130	2	CLAMP ASSEMBLY . . Flame arrestor piping
16	8128220	4	COUPLING . . Pipe
17	8116748	A. R.	PIPE . . Wrought steel - 2in. x 20 ft. lg.
18	8108224	2	CLAMP ASSEMBLY . . Flame arrestor piping
19	8182699	2	PIPE ASSEMBLY . . Coupling to fuel tank
20	8020938	2	GASKET . . Flange to fuel tank
21	179885	8	BOLT . . Flange to tank - 1/2-13 x 1-1/2 hex. hd.
22	103323	8	WASHER . . Lock - 1/2
TANK TO FUEL PUMP PIPING			
23	8133013	A. R.	TUBING . . 3/4 in. copper - 20 ft.
24	8045904	2	UNION . . 3/4 Sol.
25	8108126	3	CLAMP ASSEMBLY . . Tube
26	8108219	1	CLAMP ASSEMBLY . . Tube
27	8062394	2	ELBOW . . 3/4 Sol.
28	8157781	8	CLAMP ASSEMBLY . . Tube
29	8062403	1	ELBOW . . 3/4 Sol. x P. T.
30	8040322	1	CONNECTOR . . 3/4 P. T. x 5/8 tube
31	8116729	A. R.	TUBING . . 5/8 in. copper - 50 ft.
32	116488	4	NUT . . 5/8 tube
33	109429	3	ELBOW . . 1/2 P. T. x 5/8 tube
FILTER . . Dual Fuel			
+34	8147239	1	FILTER . . Dual fuel - See P. L. 741
PUMP . . Fuel Oil			
+35	8080384	1	PUMP . . Fuel oil - See P. L. 4110

8187642 8188291 8188236

P. L. No. B710

FUEL OIL SYSTEM

Ref. No.	Part Number	No. Req.	Description
FUEL PUMP TO ENGINE PIPING			
36	8116729	A. R.	TUBING .. 5/8 in. copper - 50 ft.
37	116488	6	NUT .. 5/8 tube
38	109429	3	ELBOW .. 1/2 P. T. x 5/8 tube
39	144277	1	ELBOW .. Union - 5/8 tube
40	8108209	2	CLAMP ASSEMBLY .. Filter to engine lines
41	8040322	1	CONNECTOR .. 5/8 tube x 3/4 P. T.
ENGINE TO TANK PIPING			
42	8133013	A. R.	TUBING .. 3/4 in. copper - 20 ft.
43	8045918	2	UNION .. 3/4 Sol. x M. P. T.
44	8062394	3	ELBOW .. 3/4 Sol.
45	8108126	2	CLAMP ASSEMBLY .. Pipe
46	8157345	1	CLAMP ASSEMBLY .. Open end
47	8108213	1	CLAMP ASSEMBLY .. Pipe

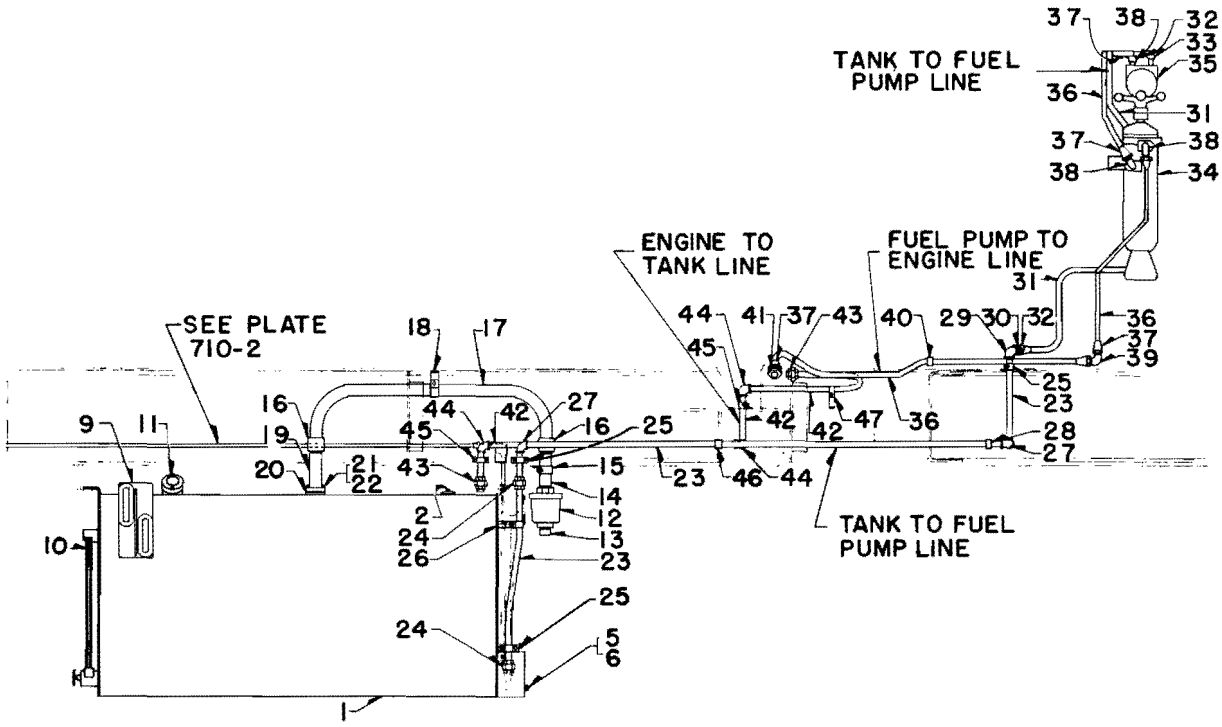

PLATE B710-1

P. L. No. B710

FUEL OIL SYSTEM

EMERGENCY FUEL CUT-OFF

SD7 AND SD9 LOCOMOTIVES

PLATE B710-2

Ref. No.	Part Number	No. Req.	Description
VALVE . . Emergency Fuel Cut-off			
1	8175543	1	VALVE . . Emergency fuel cut-off - See P. L. 729
2	8158462	1	MANIFOLD ASSEMBLY . . Suction
3	103869	2	PLUG . . Pipe - 3/4 P. T.
4	8060975	1	NIPPLE . . Short pipe - 1 P. T.
5	8018052	1	FLANGE . . 1 P. T.
6	8014686	1	GASKET . . Flange to tank
7	8154262	1	NIPPLE . . 3/4 P. T. x Sol. x 7-1/2
8	8182709	1	GUARD ASSEMBLY . . Emergency fuel cut-off
* 9	179838	4	BOLT . . Flange to tank - 3/8-16 x 7/8 hex. hd.
*10	179814	2	BOLT . . Guard to sump - 5/16-18 x 1 hex. hd.
*11	103320	2	WASHER . . Lock - 5/16
11A	8195332	1	ROD . . Pull - Emergency fuel cut-off
11B	102635	2	NUT . . Pull rod - 3/8-16 hex. hd.
11C	8032743	2	NUT . . Lock - 3/8-16 hex. hd.
BOX . . Pull - Emergency Fuel Cut-off			
12	8069331	2	BOX . . Pull - Emergency fuel cut-off - Tank mounting
13	8094336	1	BOX . . Pull - Emergency fuel cut-off - Cab mounting
14	8044133	2	PLATE ASSEMBLY . . Pull unit mounting - Pull box
15	8182704	1	BRACKET . . Mounting - Pull box
16	8190110	2	BRACKET ASSEMBLY . . Mounting - Pull box
*17	8145095	2	PLATE . . Front - Pull box
*18	8145096	2	PLATE . . Cover - Pull box
19	119933	2	BUSHING . . Reducing - 3/8 x 1/8 P. T.
20	142853	2	NIPPLE . . 1/8 P. T. x 3-1/2
21	8073344	1	NIPPLE . . Close pipe - 3/8 P. T.
*22	110545	4	SCREW . . Bracket to pull box - 10-24 x 5/8 oval hd.
*23	171964	4	SCREW . . Front plate to pull box - 10-24 x 1 oval hd.
*24	171260	2	SCREW . . Front plate to bracket - 10-24 x 3/4 flat hd.
*25	133432	3	SCREW . . Front plate to pull box - 6-32 x 1/2 flat hd.
*26	131044	3	WASHER . . Lock - No. 6
*27	106497	4	WASHER . . Lock - No. 10
*28	110633	4	NUT . . 10-24 hex.
*29	134530	3	NUT . . 6-32 hex.
CABLE ASSEMBLY . . Emergency Fuel Cut-off			
30	8201130	1	CABLE ASSEMBLY . . Emergency fuel cut-off-Approx. 9 ft. lg. - Replaces 8161647
31	8113398	1	CABLE ASSEMBLY . . Emergency fuel cut-off - Approx. 6 ft. lg.
32	8104695	1	CABLE ASSEMBLY . . Emergency fuel cut-off - Approx. 41 ft. lg.
*33	8025393	1	RING . . Pull - Emergency fuel cut-off
*34	8163788	2	CLAMP . . Cable - Emergency fuel cut-off
*35	8116731	A. R.	CABLE . . 1/8 flex steel - 100 ft.
EMERGENCY FUEL CUT-OFF PIPING			
36	8116868	A. R.	PIPE . . 1/8 brass - 12 ft.
37	179699	8	UNION . . 1/8 P. T.
38	119933	8	BUSHING . . Reducing - 3/8 x 1/8 P. T.

8187642 8182418

P. L. No. B710

FUEL OIL SYSTEM

Ref. No.	Part Number	No. Req.	Description
*39	8152998	1	NIPPLE .. Short pipe - 1/8 P. T. x Sol.
40	8058583	1	UNION .. 3/8 P. T.
41	8073344	1	NIPPLE .. Close pipe - 3/8 P. T.
42	452964	1	NIPPLE .. 1/8 P. T. x 11
*43	452880	1	NIPPLE .. 3/8 P. T. x 6-1/2
44	8061465	4	NIPPLE .. Short pipe - 1/8 P. T.
*45	452907	1	NIPPLE .. 1/8 P. T. x 8-1/2
46	188099	1	NIPPLE .. 1/8 P. T. x 5
*47	8173766	1	CLAMP .. Pipe
48	8108202	5	CLAMP .. Pipe
49	8108203	2	CLAMP .. Pipe

PULLEY . . 90° Enclosed Corner - Emergency Fuel Cut-off

50	8065074	5	PULLEY .. Enclosed corner 90° - Emergency fuel cut-off
51	8182717	1	BRACKET .. Pulley mounting
52	8182701	1	BRACKET .. Pulley mounting
53	8182703	1	BRACKET .. Pulley mounting
54	8182702	1	BRACKET .. Pulley mounting
55	8182705	1	BRACKET .. Pulley mounting
*56	171256	A. R.	SCREW .. Bracket to pulley - 10-24 x 1/2 - Self tapping flat hd.
*57	171260	A. R.	SCREW .. Bracket to pulley - 10-24 x 3/4 - flat hd.

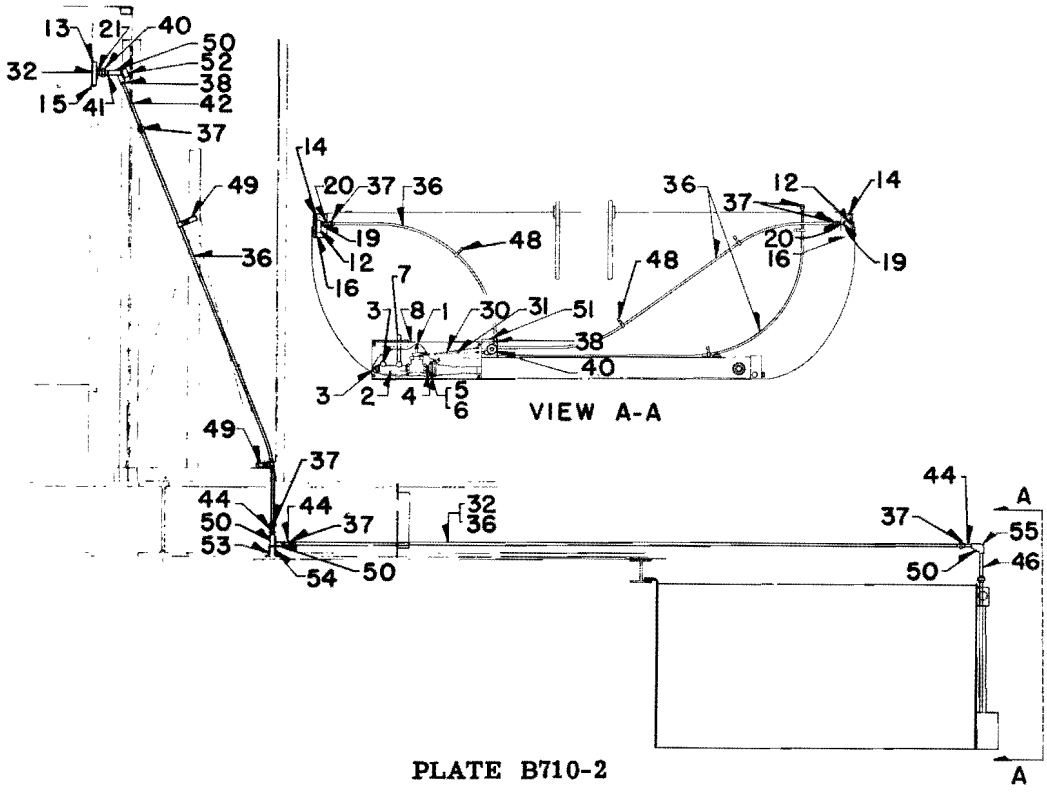

PLATE B710-2

P. L. No. B710

FUEL OIL SYSTEM

2400 GALLON FUEL TANK APPLICATION

SD7 AND SD9 LOCOMOTIVE

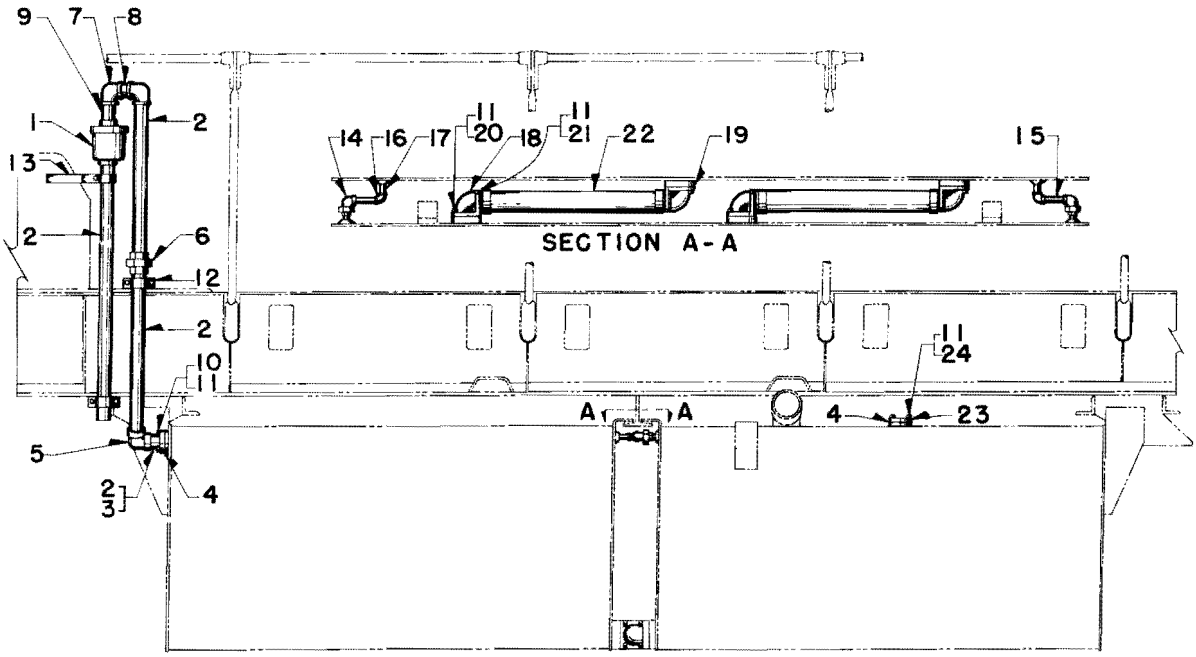

PLATE A710-3

Ref. No.	Part Number	No. Req.	Description
ARRESTOR . . Flame			
1	8167296	2	ARRESTOR . . Flame - See P. L. 740
FLAME ARRESTOR PIPING			
2	8116748	A. R.	PIPE . . 2 in. standard wrought steel - 20 ft.
3	8182483	1	FLANGE . . Pipe
4	8020938	4	GASKET . . Tank to flange
5	8128273	2	ELBOW . . 2 in. - welded
6	8044158	2	UNION . . 2 P. T.
7	189777	4	ELBOW . . 2 P. T.
8	8060978	2	NIPPLE . . Short pipe - 2 P. T. - Used between elbows
9	219510	2	NIPPLE . . Pipe - 2 P. T. x 11-1/2
10	179885	8	BOLT . . Flange to tank - 1/2-13 x 1 1/2 hex. hd.
11	103323	32	WASHER . . Lock - 1/2
12	8108130	4	CLAMP ASSEMBLY . . Pipe
13	8108224	2	CLAMP ASSEMBLY . . Pipe
FUEL TANK CONNECTING PIPING			
14	8085633	2	ELBOW . . 3/4 solder x 3/4 P. T. union
15	8133013	A. R.	TUBING . . 3/4 in. O. D. copper - 20 ft.
16	8062394	2	ELBOW . . 3/4 Sol.
17	8110927	2	NIPPLE . . Brass standard - 3/4 P. T. x 3/4 solder x 2-1/2
18	8134836	4	ELBOW . . Flanged - Tank to tank piping
19	8126649	4	GASKET . . Elbow to tank flange - Replaces 8038897
20	179887	8	BOLT . . Elbow to tank - 1/2-13 x 1-3/4 hex. hd.
21	187201	8	BOLT . . Elbow to tank - 1/2-13 x 4-3/4 hex. hd.
22	8116881	A. R.	PIPE . . 3 in. O. D. standard brass - 12 P. T.
23	8050962	2	FLANGE . . Blind
24	179883	8	BOLT . . Blind flange to tank . . 1/2-13 x 1-1/4 hex. hd.

8188369

Parts List No. B711

FUEL OIL SYSTEM

FT LOCOMOTIVE

PLATE A711-1

Ref. No.	Part Number	No. Req.	Description
1	8044147	1	TANK .. Fuel - 1170 gal.
* 2	8080248	1	TANK .. Fuel - 1350 gal. - FTS loco. only - E572-573-551-585
3	- - - -	1	GAUGE .. Fuel level - R.H. or L.H. side - See P. L. 728
4	8132295	1	FILTER .. Fuel - Ful flo - Replaces 8058354 - See P. L. 732
5	8079494	1	FILTER .. Fuel oil - See P. L. 730
6	8048583	1	PUMP .. Fuel - Includes motor - See P. L. 4110
7	8042029	1	FILLER .. Fuel tank - See P. L. 726
8	8065068	1	VALVE ASSEMBLY .. Relief - Combination sight glass - Replaces 8059617 valve - See P. L. 734
			NOTE: Fuel line piping requires alteration when replacing 8059617 valve by 8065068 valve. Refer to P. L. 734 for necessary parts for conversion.
* 9	8024140	1	GAUGE .. Fuel level - Air operated - See P. L. 725
10	8165696	2	FLANGE .. Pipe - 2 in. - Flame arrestor piping - Repl. 8044290
11	8015690	2	GASKET .. Flange to tank
12	8062303	2	TEE .. Reducing - 2 in. solder x 1/2 P.T. x 2 in. solder
13	8062398	4	ELBOW .. Solder - 2 in. - 90°
14	8045908	2	UNION .. Solder - 2 in. - Replaces 8062490
15	8062409	2	BEND .. Return - Solder - 2 in.
16	8167296	2	ARRESTOR .. Flame - 2 in. pipe - See P. L. 740
17	8062429	2	ELBOW .. Solder - 2 in. - 45°
18	- - - -	A.R.	TUBING .. Copper - 2 in. - Avail. 20 ft. lg. - 8122502
19	8073346	1	NIPPLE .. Close - 3/4
20	144169	1	CAP .. Pipe - 1/2
21	144034	1	BUSHING .. Reducing - 3/4 x 1/2
*22	8058480	1	BRACKET .. Tube mounting - Fuel line to fuel oil filter on engine
23	8044169	4	ELBOW .. Union - 3/4 - 90° female - Replaces 187459
24	8062437	1	ELBOW .. Reducing - 3/4 x 1/2 - 90° solder
25	- - - -	A.R.	PIPE .. Brass - 1/2 in. - Avail. 12 ft. lg. - 8116871
26	8062374	3	ELBOW .. Solder - 1/2-90°
*27	8058485	3	BLOCK .. Tube clamp - Fuel line to engine filter
*28	8058486	1	BRACKET .. Tube mounting - Fuel oil line
*29	8058487	3	BLOCK .. Tube clamp - Fuel oil line
30	8040324	1	COUPLING .. 1/2 tube x 1/2 F.P.T.
31	118541	20	NUT .. Flared tube - 1/2
32	- - - -	A.R.	TUBING .. Copper - 1/2 O.D. - Avail. 50 ft. lg. - 8116730
33	8027437	6	ELBOW .. 1/2 tube x 1/2 M.P.T.
34	8055183	1	SUPPORT .. Pump and filter
35	8055184	1	BRACKET .. Sight gauge
36	8044104	6	CLAMP .. Tube - Top
37	8044103	6	CLAMP .. Tube - Bottom
38	8044100	1	PLATE .. Tube clamp back
39	8044102	1	DUCT .. Tube - Bottom
40	8044101	1	COVER ASY. .. Tube duct
41	8027428	6	COUPLING .. Union - 1/2 tube x 1/2 P.T.
42	144089	5	TEE .. 1/2
43	8073299	10	NIPPLE .. Close - 1/2

8065076

P. L. No. B711

FUEL OIL SYSTEM

Ref. No.	Part Number	No. Req.	Description
44	103868	3	PLUG .. Pipe - 1/2
*45	8073344	2	NIPPLE .. Close - 3/8
*46	120142	2	ELBOW .. Female - 1/2 tube x 3/8 P.T.
*47	118804	2	UNION .. Tube - 1/2
*48	118753	2	UNION .. Half - 1/4 tube x 1/8 P.T.
49	118537	8	NUT .. Coupling - Flared - 1/4
*50	118800	3	UNION .. Tube - 1/4
51	8052117	1	TEE .. Union - 3/4-90° solder - Replaces 8072415
52	- - - -	A.R.	TUBING .. Copper - 1/4 - Avail. 50 ft. lg. - 8116511
53	113177	1	PLUG .. Pipe - 3/4
54	144130	2	ELBOW .. 1/2-90°
55	8062287	1	TEE .. Solder - 1/2
56	8065227	1	TEE .. Reducing - 3/4 x 1/2 x 1/2 solder
57	8062372	1	VALVE .. Angle - 1/2 solder
*58	8062419	1	COUPLING .. 3/4
59	- - - -	A.R.	TUBING .. Copper - 3/8 - Avail. 25 ft. lg. - 8116865
60	- - - -	A.R.	TUBING .. Copper - 1 in. - Avail. 20 ft. lg. - 8133013
61	8058649	5	UNION .. Female - 1/2 - Replaces 179702
62	- - - -	A.R.	PIPE .. 3/4 in. brass - Avail. 12 ft. lg. - 8116886
*63	118539	6	NUT .. Coupling - 3/8 flared
*64	118802	2	UNION .. Tube - 3/8
*65	118755	2	ELBOW .. Union - Half - 3/8 tube x 1/4 P.T.
66	179841	8	SCREW .. Cap - 3/8-16 x 1-1/4 hex. hd. - Replaces 100135
67	179839	15	SCREW .. Cap - 3/8-16 x 1 hex. hd. - Replaces 100134
68	103321	31	WASHER .. Lock - 3/8
69	102635	11	NUT .. 3/8-16 hex. - Replaces 429607
70	179835	8	SCREW .. Cap - 3/8-16 x 5/8 hex. hd. - Replaces 106329
*71	179803	9	SCREW .. Cap - 1/4 - 20 x 1-3/4 hex. hd. - Replaces 100113
*72	106261	9	WASHER .. Plain - 1/4
*73	103319	9	WASHER .. Lock - 1/4
74	103323	2	WASHER .. Lock - 1/2
75	102637	2	NUT .. 1/2-13 hex. - Replaces 429608
76	190270	2	SCREW .. Cap - 1/2-13 x 4-1/4 hex. hd. - Replaces 174772
77	103320	12	WASHER .. Lock - 5/16
78	132345	12	SCREW .. 5/16-18 x 1-1/2 fil. hd. - Slotted - Replaces 117296
79	103340	12	WASHER .. Flat - 5/16
80	113988	7	SCREW .. 1/4-20 x 1/2 flat hd. - Slotted
81	8045937	2	ELBOW .. Union - 1/2-90° - Replaces 179729
82	8061459	1	NIPPLE .. Close - 1/2
83	119102	1	CAP .. Pipe - 3/4
84	8045934	2	ELBOW .. Union - 2 in. 90° solder - Replaces 8062475

P. L. No. B711

FUEL OIL SYSTEM

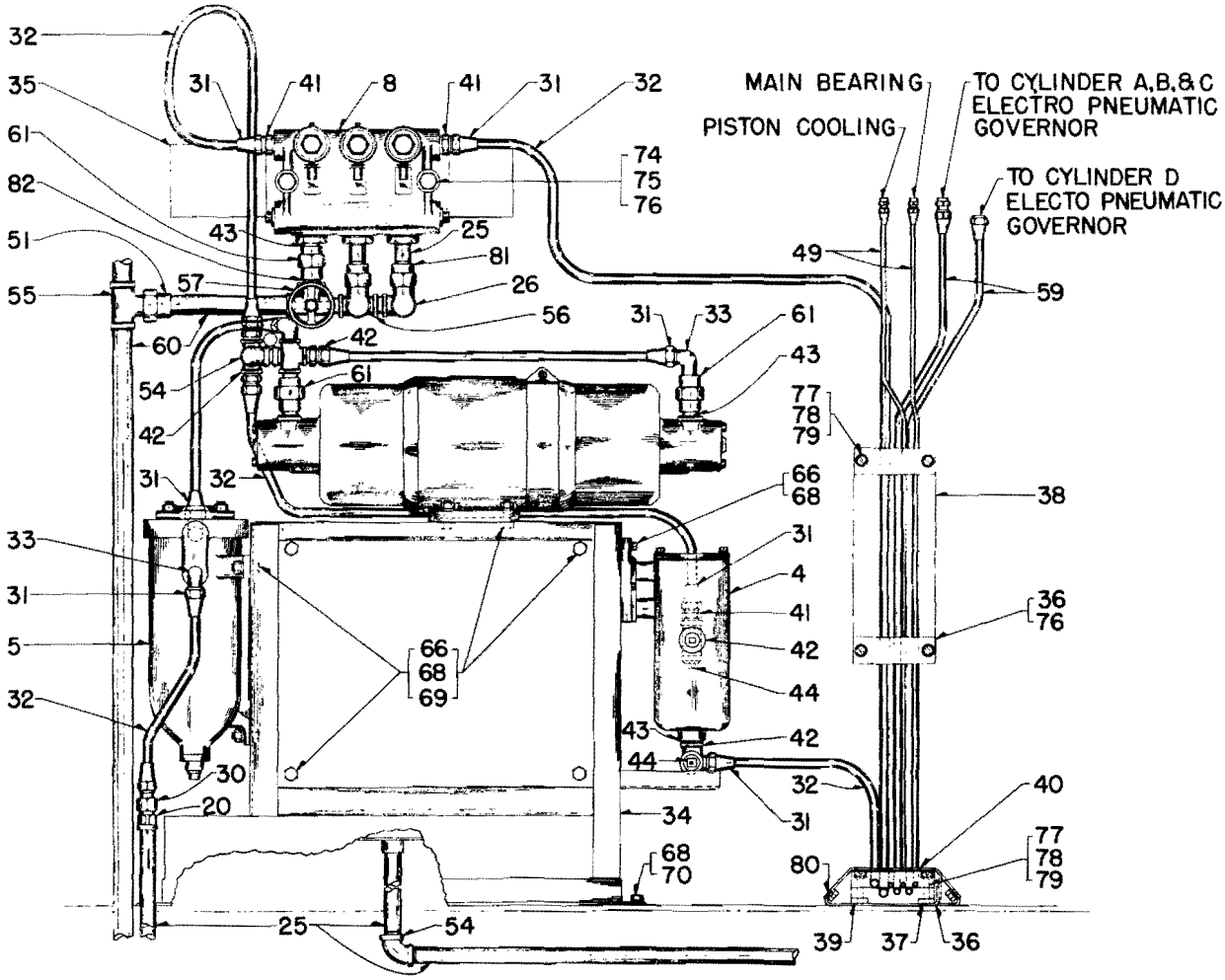

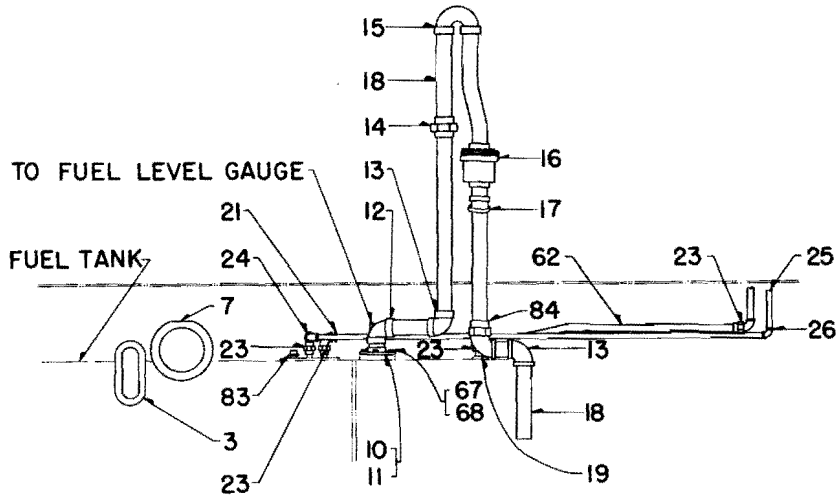

PLATE A711-1

P. L. No. B711

FUEL OIL SYSTEM

EMERGENCY FUEL CUT-OFF ASSEMBLY

PLATE A711-2

Ref. No.	Part Number	No. Req.	Description
			NOTE: Number required is per locomotive unit.
1	8015774	2	PLATE .. Front - Pull box
2	8069331	2	BOX .. Pull - Flush type
3	171260	4	SCREW .. 10-24 flat hd. - Cross recessed
4	8044145	2	PLATE .. Side
5	8044133	2	PLATE .. Pull unit mounting
6	171964	8	SCREW .. 10-24 oval hd. - Self-tapping
7	106495	6	WASHER .. Lock
8	103091	6	NUT .. 6-32 hex.
9	100803	6	SCREW .. 6-32 flat hd.
10	8094336	1	BOX .. Fuel cut-off
11	8104694	1	COVER .. Box
12	8104695	1	CABLE .. 1/8 in. - 50 ft. lg. - Includes "T" type handle
13	8065074	3	PULLEY .. Corner - Replaces 8059546
14	8064390	2	BRACKET .. Pulley
15	8064157	1	BRACKET .. Pull box
16	8058583	1	UNION .. Female - 3/8 - Replaces 179701
17	179699	4	UNION .. Female - 1/8
18	132830	8	SCREW .. 10-24 x 3/8 rd. hd. - Slotted
19	120217	8	WASHER .. Lock - No. 10
*20	- - - -	A.R.	TUBING .. Copper - 1/2 - Avail. 50 ft. lg. - 8116730
21	- - - -	A.R.	PIPE .. Brass - 3/8 - Avail. 12 ft. lg. - 8116870
22	- - - -	A.R.	PIPE .. Brass - 1/8 - Avail. 12 ft. lg. - 8116868
23	113867	4	SCREW .. 5/16-18 x 1-1/2 rd. hd. - Slotted
24	103320	4	WASHER .. Lock
25	102634	4	NUT .. 5/16 hex. - Replaces 174845
26	103340	4	WASHER .. Plain - 5/16
27	8073344	1	NIPPLE .. Close - 3/8
28	113993	2	SCREW .. 1/4-20 x 1 flat hd. - Slotted
29	103319	2	WASHER .. Lock - 1/4
30	109084	2	NUT .. 1/4 hex. - Replaces 174843
31	119933	5	BUSHING .. Reducing - 3/8 x 1/8
*32	219354	1	NIPPLE .. 1 in. standard - 8 in. long - Fuel tank cut-off
*33	8060975	2	NIPPLE .. 1 in. standard - 2 in. long - Fuel tank cut-off
*34	190570	1	NIPPLE .. 1 in. standard - 3 in. long - Fuel tank cut-off
*35	8045220	2	ELBOW .. Union - 1 in. - 90° - Fuel tank cut-off - Repl. 187404
*36	8058701	1	FLANGE .. Pipe - 1 in. - Fuel tank cut-off
*37	8083883	1	VLAVE .. Safety cut-off - 1 in. - Fuel tank cut-off - See P. L. No. 729

8064298

P. L. No. B711

FUEL OIL SYSTEM

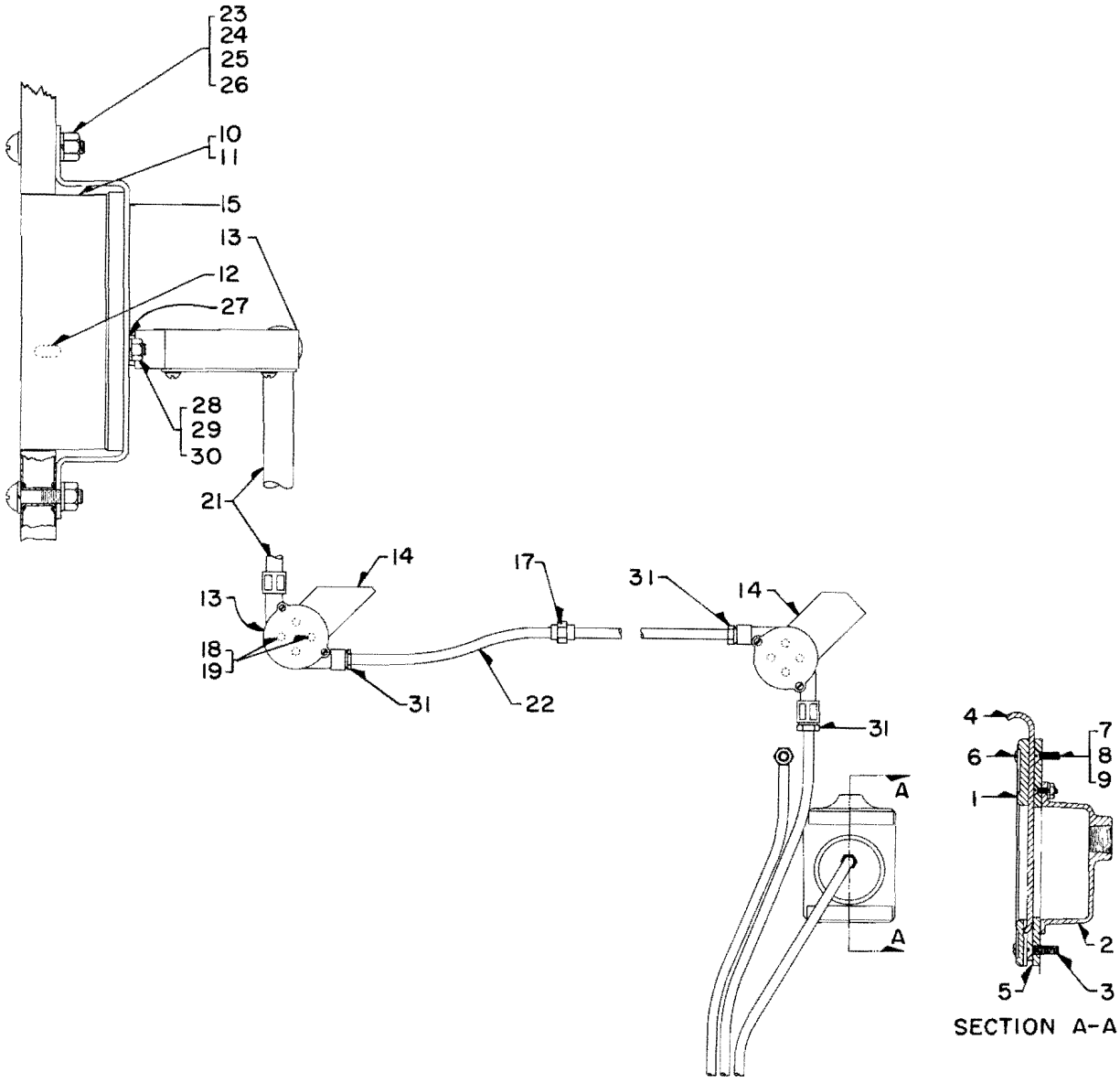

EMERGENCY FUEL CUT-OFF ASSEMBLY

PLATE A711-2

Parts List No. A717

FUEL OIL SYSTEM

GP9 LOCOMOTIVE

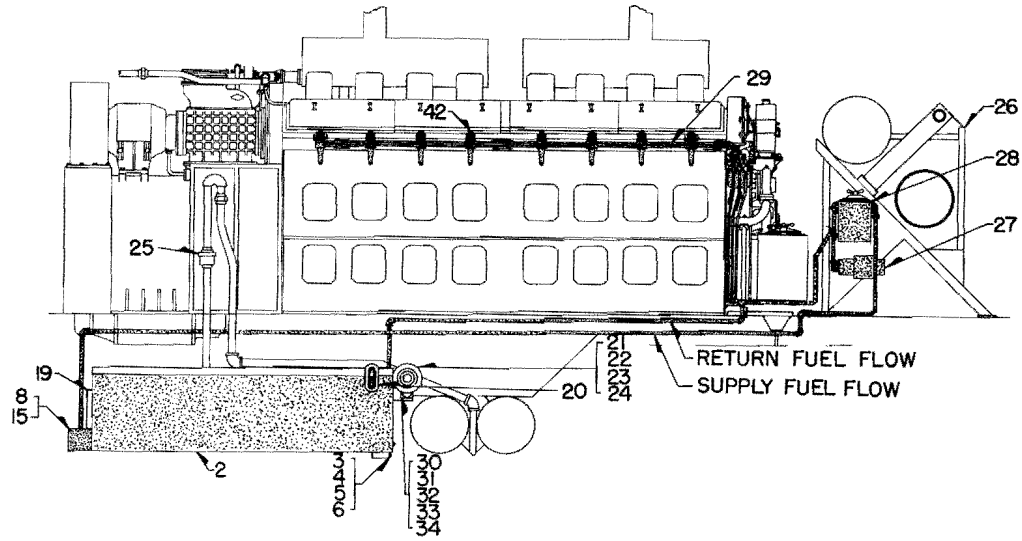

FUEL PIPING ARRANGEMENT

PLATE A717-1

Ref. No.	Part Number	No. Req.	Description
* 1	8175551	1	TANK ASSEMBLY .. Fuel - 800 gallon
2	8158688	1	TANK .. Fuel
3	8080203	1	PLUG .. Drain
4	8010874	1	GASKET .. Drain plug
5	8080204	1	SCREW .. Retaining - Drain plug
6	119937	1	GASKET .. Retaining screw - 1/2
* 7	8175542	1	VALVE ASSEMBLY .. Reset cam and
8	8083883	1	VALVE .. Emergency fuel cut-off - 1 P.T. - See P. L. 729
* 9	8175544	1	CAM ASSEMBLY .. Reset
*10	8175545	1	AXLE .. Yoke
*11	8175546	2	ROLLER .. Reset cam
*12	103341	2	WASHER .. Plain - 3/8
*13	103384	2	PIN .. Cotter - 1/4 x 3/4 in. lg.
*14	8175428	1	ROD .. Cut-off valve reset
15	8158462	1	MANIFOLD .. Suction
*16	8065074	2	PULLEY .. 90 degree enclosed
*17	8173447	2	WHEEL .. Pulley
*18	8209389	2	COVER .. Housing
19	8171519	2	GAUGE ASSEMBLY .. Full length fuel level - Replaced by component parts - See P. L. 728
20	- - - -	2	GAUGE .. Fuel level - See P. L. 728
21	8094697	2	FILLER .. Fuel tank - See P. L. 726
22	8144289	2	HOUSING .. Fuel filler pipe - Skirt mounted
23	8144288	2	PIPE .. Fuel filler
24	8144286	2	GASKET .. Fuel filler pipe elbow to fuel tank
25	8167296	2	ARRESTOR .. Flame - See P. L. 740

8157560 8159907 8159140 8175551

P. L. No. A717

FUEL OIL SYSTEM

Ref. No.	Part Number	No. Req.	Description
26	8154957	1	RACK .. Equipment - See P. L. 1000
27	8080384	1	PUMP .. Fuel oil - Includes motor - See P. L. 4110
28	8147239	1	FILTER .. Fuel oil - See P. L. 741
29	- - - -	-	ENGINE FUEL OIL PIPING - See P. L. 415
30	8069331	2	BOX .. Emergency fuel cut-off pull - Flush type - Skirt mounted
31	8015774	2	PLATE .. Front
32	8044145	2	PLATE .. Slide
33	8044133	2	PLATE .. Mounting
34	8201130	1	CABLE ASSEMBLY .. Includes pull ring - L.S. - 9 ft. lg.
*35	8201129	1	CABLE ASSEMBLY .. Includes pull ring - R.S. - 7 ft. 6 inches lg.
*36	8094336	1	BOX .. Emergency fuel cut-off pull - Cab mounted
*37	8126886	1	CABLE ASSEMBLY .. Includes pull ring - 16 ft. lg.
*38	8148260	1	BLOCK .. Pull box
*39	8065074	4	PULLEY .. 90 degree enclosed
*40	8173447	4	WHEEL .. Pulley
*41	8209389	4	COVER .. Housing
42	5227852	AR	INJECTOR .. Fuel - See P. L. 417

Parts List No. C724

FUEL OIL PRESSURE GAUGE

E7, SW1, NW2, NW5, SW7, TR2, TR3, TR4, TR5, TR6, SW8, SW9, AND BL LOCOMOTIVES

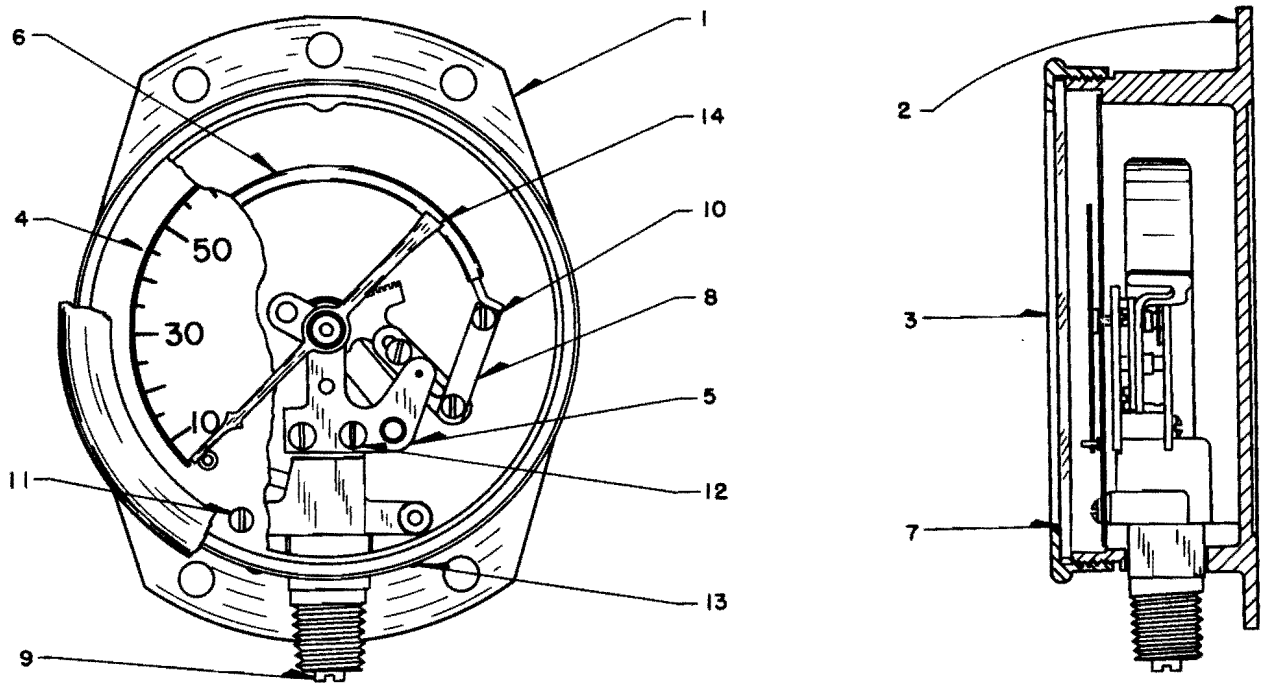

PLATE A724-1

Ref. No.	Part Number	No. Req.		Description
1	8032122	1	-	GAUGE .. Fuel oil pressure - 0-100 lbs. - 3-1/2 in. dial - SW1, NW2, NW5, SW7, TR2, TR3, TR4, and E7 locomotives - Replaces 8027469
* 1A	8121912	-	1	GAUGE .. Fuel oil pressure - 0-30 lbs. - 3-1/2 dia. - SW1, SW7, SW8, SW9, NW2, TR2, TR3, TR4, TR5, TR6, BL locos.

NOTE: The 8121912 gauge is intended for indicating return fuel pressure on switching and BL locos. and may be used to replace the 8032212 gauge where a 0-30 lb. dial is preferable to the 0-100 lb. dial gauge.

2	8140927	1	1	CASE .. Gauge
3	8140930	1	1	RING .. Gauge
4	8116656	1	-	DIAL .. Gauge - 0-100 lbs.
* 4A	8163359	-	1	DIAL .. Gauge - 0-30 lbs.
5	8050623	1	1	MOVEMENT ASY.
6	8035747	1	-	SYSTEM ASY.
* 6A	8189728	-	1	SYSTEM ASY.
7	8035750	1	1	GLASS
8	8039946	A. R.	A. R.	LINK .. Connecting - 11/16 in. lg. - Repls. 8163973 - See Note 1
* 8A	8035756	A. R.	A. R.	LINK .. Connection - 7/16 in. lg. - Repls. 8163973 - See Note 1
9	8164348	1	1	SCREW .. Throttle - 1/4-28 x 3/16 headless slotted
10	8054980	2	-	SCREW .. Connection - No. 3-56 x .078 flat hd. - Fil.
*10A	8054986	-	2	SCREW .. Connection
11	224486	2	2	SCREW .. Dial - No. 3-56 x 1/8 fil. hd. slotted
12	133359	2	2	SCREW .. Movement - No. 4-40 x 3/16 flat hd. slotted
13	132969	2	2	SCREW .. Socket - No. 12-24 x 3/8 rd. hd. slotted
14	8140929	1	1	POINTER ASY.

NOTE 1: One connection link required per gauge. Correct link to use can only be determined at assembly.

Parts List No. C725

AIR OPERATED FUEL LEVEL GAUGE

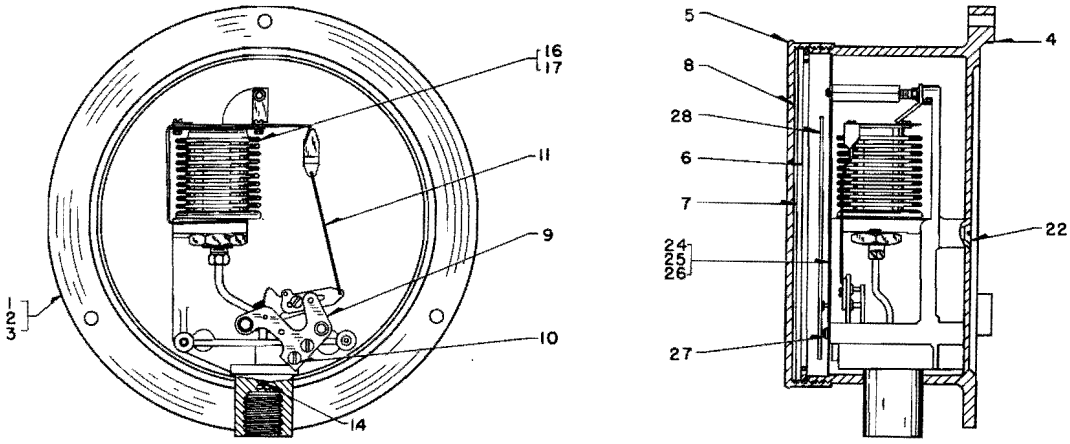

PLATE B725-1

Ref. No.	Part Number	Number Required			Description
GAUGE . . Air operated fuel level					
1	8024140	A	-	-	GAUGE . . Air operated fuel level - 0 to 28 in. - 5 inch dial
2	8146770	-	B	-	GAUGE . . Air operated fuel level - 0 to 26 in. - 5 inch dial
3	8148126	-	-	C	GAUGE . . Air operated fuel level - 0 to 35 in. - 5 inch dial
4	8062194	1	1	1	CASE . . Gauge
5	8062195	1	1	1	RING . . Cover
6	8039965	1	1	1	RING . . Retaining - Formerly 8136170
7	8039967	1	1	1	GLASS . . Gauge
8	8039966	1	1	1	GASKET . . Cover ring
MOVEMENT ASSEMBLY . . Gauge					
9	8039976	1	1	1	MOVEMENT ASSEMBLY . . Includes segment and shaft
10	133359	1	1	1	SCREW . . Machine - Movement mounting - No. 4-40 x 3/16 flat hd.
11	8039974	1	1	1	LINK . . Movement
SYSTEM ASSEMBLY . . Gauge					
12	8048222	1	1	-	SYSTEM ASSEMBLY . . Gauge
13	8044489	-	-	1	SYSTEM ASSEMBLY . . Gauge
14	8189751	1	1	1	SCREW . . Throttling
15	8039978	1	1	1	POST . . Dial elevating
16	8192809	1	1	-	BELLOWS ASSEMBLY . . Includes 8156181 lockwasher
17	8187601	-	-	1	BELLOWS ASSEMBLY . . Includes 8156181 lockwasher
*18	8039987	1	1	1	ARM . . Actuating
*19	8039988	1	1	1	NUT . . Lock - Bellows
*20	113103	1	1	1	NUT . . Lock - 8-32 hex.
*21	8079011	1	1	1	WASHER . . Lock
22	100870	3	3	3	SCREW . . Machine - System mounting - 10-32 x 3/4 flat hd.
*23	8189752	1	1	1	STOP . . Bellows
24	8039970	1	-	-	DIAL . . Gauge - Black - 0 to 28 lbs.
25	8163354	-	1	-	DIAL . . Gauge - Black - 0 to 26 lbs.
26	8163357	-	-	1	DIAL . . Gauge - Black - 0 to 35 lbs.
27	131820	3	3	3	SCREW . . Machine - Dial mounting - No. 4-50 x 3/16 fil. hd.
28	8039972	1	1	1	POINTER . . Gauge - White

NOTE: See fuel system P. L. 743 for reducing relief valve and filter.

Parts List No. E726

FUEL TANK FILLER

ALL LOCOMOTIVES
FUEL FILLER
ALL FREIGHT, PASSENGER, BL, GP, SD LOCOMOTIVES

PLATE D726-1

Ref. No.	Part Number	Number Required								Description
		X	-	-	-	-	-	-	-	FT,E3,E4,E5,E6,E7 - 4 M.P.T. filler
		-	X	-	-	-	-	-	-	F2,F3,F7,F9,FP7,FP9,BL - 4 M.P.T. filler
		-	-	X	-	-	-	-	-	E8,E9 - 4 M.P.T. filler
		-	-	-	X	-	-	-	-	E7,F7 with Union Pacific special fittings
		-	-	-	-	X	-	-	-	E7 - 3 M.P.T. filler
		-	-	-	-	-	X	-	-	F3,F7,F9,BL - 3 M.P.T. filler
		-	-	-	-	-	-	X	-	GP7,GP9 - 4 M.P.T. filler
		-	-	-	-	-	-	-	X	SD7, SD9, GP7, GP9 - 4 M.P.T. filler with chain on cap

NOTE: Parts listed apply to one side of locomotive only.

1	8094697	1	1	1	-	-	-	1	-	FILLER .. Fuel - 4 M.P.T.
2	8042029	1	1	1	-	-	-	1	-	CAP ASY. .. Fuel filler - 2-1/2 P.T.
3	8068955	1	1	1	-	-	-	1	-	CAP .. Fuel filler
4	8065493	1	1	1	-	-	-	1	-	GASKET .. Cap
5	8068956	1	1	1	-	-	-	1	-	VALVE .. Relief
6	8068957	1	1	1	-	-	-	1	-	GASKET .. Relief valve
7	8056842	1	1	1	-	-	-	1	-	SPRING .. Relief valve
* 8	125348	1	1	1	-	-	-	1	-	NUT .. Relief valve - 3/8-24 hex.
* 9	121223	1	1	1	-	-	-	1	-	PIN .. Cotter - 1/16 x 3/4 in. lg. - Replaces 137141
10	8126390	1	1	1	-	-	-	1	-	BODY .. Fuel filler - 4 M.P.T. x 2-1/2 F.P.T. for cap - Has lugs for quarter turn external connection
11	8062960	1	1	1	-	-	-	1	-	SCREEN .. Fuel filler
/12	8068487	1	-	-	1	1	-	-	-	PIPE .. Filler
/13	8097382	-	1	-	1	-	1	-	-	PIPE .. Filler
14	8144288	-	-	-	-	-	-	1	1	PIPE .. Filler - GP7, GP9 only with 800 gallon tank
15	8144284	-	-	-	-	-	-	1	1	UNION .. Filler pipe - GP7, GP only with 1100 gallon tank
16	8144289	-	-	-	-	-	-	1	1	HOUSING .. Filler pipe - GP7, GP9 only
17	8015763	1	1	-	1	1	1	-	-	HOUSING .. Filler - Replaces 8068488
18	8021308	-	-	-	1	-	-	-	-	ADAPTER .. Pipe
19	8040572	-	-	-	1	-	-	-	-	ADAPTER .. Fuel filler
20	8118750	-	-	-	1	-	-	-	-	ADAPTER ASY. .. Pipe - Includes screen - F7 only
21	8015764	1	1	-	1	1	1	-	-	RING .. Retaining
22	8144908	-	-	1	-	-	-	-	-	RING .. Trim
23	8040564	-	-	-	1	-	-	-	-	CAP .. Fuel filler adapter
24	8059242	-	-	-	-	1	1	-	-	FILLER .. Fuel - 3 M.P.T.
25	8045954	-	-	-	-	1	1	-	-	CAP ASY. .. Fuel filler - 2 P.T. - See Plate 726-2
26	8066168	-	-	-	-	1	1	-	-	SCREEN .. Fuel filler
27	8126378	-	-	-	-	1	1	-	-	BODY .. Filler - 3 M.P.T. x 2 F.P.T. for cap - Has lugs for quarter turn external connection

/ Union Pacific uses 8068487 pipe on E7 locomotive and 8097382 pipe on F7 locomotive.
8015761 8094411 8145431

P. L. No. E726

FUEL TANK FILLER

Ref. No.	Part Number	Number Required								Description
		X	-	-	-	-	-	-	-	FT,E3,E4,E5,E6,E7 - 4 M.P.T. filler - (continued)
		-	X	-	-	-	-	-	-	F2,F3,F7,F9,FP7,FP9,BL - 4 M.P.T. filler (continued)
		-	-	X	-	-	-	-	-	E8,E9 - 4 M.P.T. filler (continued)
		-	-	-	X	-	-	-	-	E7,F7 with Union Pacific special fittings - (continued)
		-	-	-	-	X	-	-	-	G7 - 3 M.P.T. filler (continued)
		-	-	-	-	-	X	-	-	F3,F7,F9,BL - 3 M.P.T. filler (continued)
		-	-	-	-	-	-	X	-	GP7,GP9 - 4 M.P.T. filler (continued)
		-	-	-	-	-	-	-	X	SD7,SP9,GP7,GP9 - 4 M.P.T. filler with chain on cap (continued)
*28	219062	-	-	-	-	1	1	-	-	BUSHING .. Face type reducing - 4 M.P.T. x 3 F.P.T.
29	8144286	-	-	-	-	-	-	1	1	GASKET .. Filler pipe to fuel tank - GP7, GP only with 800 gallon tank
30	8015765	1	1	-	1	1	1	-	-	GASKET .. Retaining ring
31	8015766	1	1	-	1	1	1	-	-	GASKET .. Filler pipe to fuel tank
32	8040567	-	-	-	1	-	-	-	-	GASKET .. Adapter to cap - 2-5/16 I.D. x 2-15/16 O.D. x 3/16
33	121371	6	6	-	6	6	6	-	-	SCREW .. Filler hsg. to retaining ring - 5/16-18 x 1 oval hd. slotted - Replaces 121706
*34	175601	-	-	7	-	-	-	-	-	SCREW .. Trim ring to skirt - 1/4-20 x 1/2 rd. hd. slotted
35	172056	-	-	-	-	-	-	7	7	SCREW .. Filler pipe housing to skirt 1/4-20 x 3/4 oval hd. slotted - GP7, FGP9 only
36	103323	10	10	-	10	10	10	-	-	WASHER .. Lock - 1/2
*37	- - - -	-	-	-	-	-	-	A.R.	A.R.	PIPE .. Filler - 3-1/2 I.P.S. brass - 33-1/4 33-1/4 inches required - Available 12 ft. - 8116882 - GP7 with 1100 gallon tank only
38	179884	10	10	-	10	10	10	-	-	BOLT .. Filler pipe to fuel tank - 1/2-13 x 1-3/8 hex. hd. - Replaces 173826
*39	8204768	-	-	-	-	-	-	-	1	FILLER .. Fuel - 4 M.P.T.
40	8204767	-	-	-	-	-	-	-	1	CAP ASY. .. Fuel filler - 2-1/2 P.T.
41	8068955	-	-	-	-	-	-	-	1	CAP .. Fuel filler
42	8065493	-	-	-	-	-	-	-	1	GASKET .. Cap
43	8208126	-	-	-	-	-	-	-	1	VALVE .. Relief
44	8068957	-	-	-	-	-	-	-	1	GASKET .. Relief valve
45	8056842	-	-	-	-	-	-	-	1	SPRING .. Relief valve
*46	125348	-	-	-	-	-	-	-	1	NUT .. Relief valve - 3/8-24 hex.
*47	121223	-	-	-	-	-	-	-	1	PIN .. Cotter - 1/16 x 3/4 in. lg.
48	8208127	-	-	-	-	-	-	-	1	CHAIN .. Filler cap
49	8126390	-	-	-	-	-	-	-	1	BODY .. Filler - 4 M.P.T. x 2-1/2 F.P.T. for cap - Has lugs for quarter turn external connection
50	8062960	-	-	-	-	-	-	-	1	SCREEN .. Fuel filler

NOTE: Ref. No. 51 is not a locomotive part. This item is used to attach an external fuel line to a locomotive fuel filler body having lugs for a quarter turn connection.

*51	8044586	1	1	1	-	1	1	1	1	COUPLING .. Quarter turn hose
*52	8174245	1	1	1	-	1	1	1	1	GASKET .. Coupling

P. L. No. E726

FUEL TANK FILLER

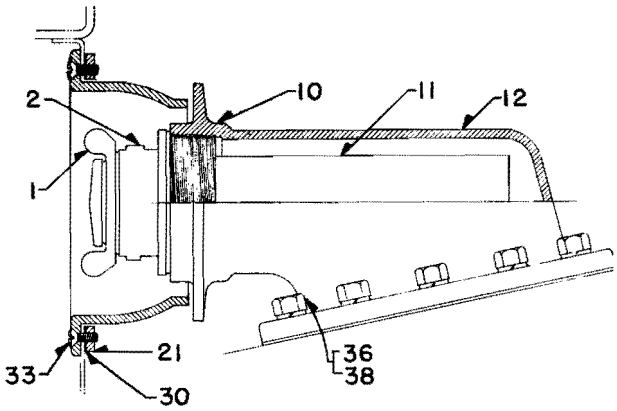

FT,E3,E4,E5,E6,E7 LOCOMOTIVES
F2,F3,F7,F9,FP7,FP9,BL LOCOMOTIVES

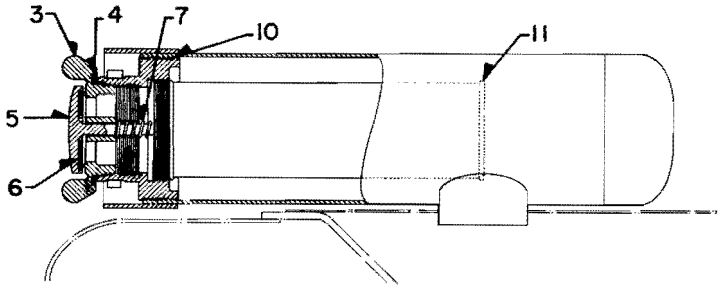

E8,E9 LOCOMOTIVES

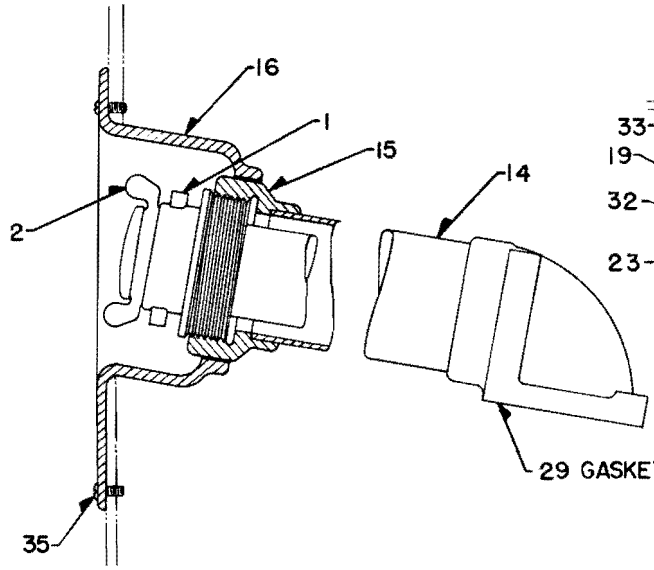

GP7,GP9,SD7,SD9 LOCOMOTIVES

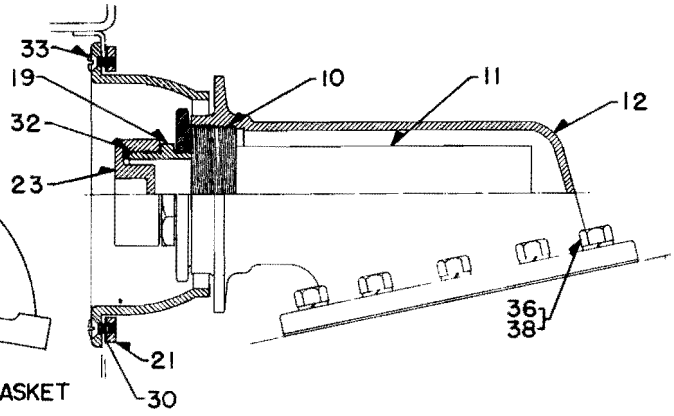

E7,F7 WITH UNION PACIFIC
SPECIAL FITTINGS

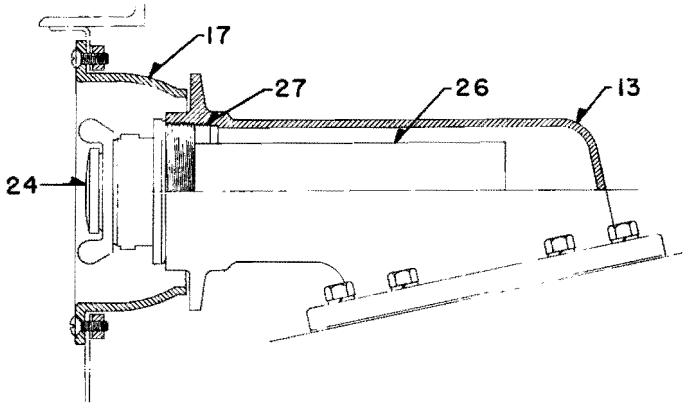

E7,F3,F7,F9,BL LOCOMOTIVES

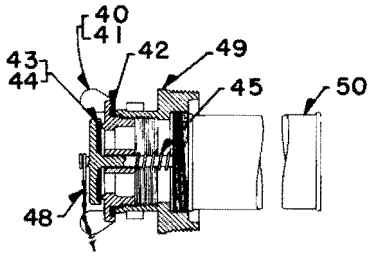

FILLER WITH CHAIN ON CAP
SD7,SD9,GP7,GP9 LOCOMOTIVES

FUEL FILLER
ALL FREIGHT, PASSENGER, BL, GP, SD LOCOMOTIVES

PLATE D726-1

P. L. No. E726

FUEL TANK FILLER

SW1,NW2,NW3,NW4,NW5,SW7,SW8,SW9,SW600,SW900,SW1200,
TR2,TR3,TR4,TR5,TR6,GP7 LOCOMOTIVES

PLATE D726-2

Ref. No.	Part Number	No. Required				Description
		X	-	-	-	SW1,NW2,NW4,NW5,SW7,TR2,TR3,TR4,SW8,SW9,TR5,TR6, SW600,SW900,SW1200 - 3 M.P.T. filler
		-	X	-	-	SW1,NW2,NW5,TR2,SW8,SW9 with 2 P.T. cap asy. with quarter turn lugs on filler body
		-	-	X	-	NW3
		-	-	-	X	NW2,SW7,SW8,SW9,GP7 with 2-1/2 P.T. cap asy. and quarter turn lugs on filler body
1	8008584	1	-	-	-	FILLER .. Fuel tank - 3 M.P.T. - Includes Ref. No's. 3-13
* 2	8059242	-	1	-	-	FILLER .. Fuel tank - 3 M.P.T. - Includes Ref. No's. 3-10,12,14
3	8045954	1	1	1	-	CAP ASY. .. Fuel filler - 2 P.T.
4	8056838	1	1	1	-	CAP .. Fuel filler
5	8056840	1	1	1	-	VALVE .. Relief
6	8056841	1	1	1	-	GASKET .. Relief valve
7	8056842	1	1	1	-	SPRING .. Relief valve
8	125348	1	1	1	-	NUT .. Relief valve - 3/8-24 hex.
9	121223	1	1	1	-	PIN .. Cotter - 1/16 x 3/4 in. lg. - Replaces 137141
10	8096524	1	1	1	-	GASKET .. Cap
11	8045955	1	-	1	-	BODY .. Filler - 3 M.P.T. x 2 F.P.T. for cap
12	8066168	1	1	-	-	SCREEN .. Filler
13	9400864	1	-	1	-	SCREW .. Set - Retains screen to body - 1/4-20 x 5/8 cup point
14	8126378	-	1	-	-	BODY .. Filler - 3 M.P.T. x 2 F.P.T. for cap - Has lugs for quarter turn external connection
15	8042361	1	-	-	-	HOUSING .. Fuel filler - SW1,NW2,NW4,NW5,SW7,TR2,TR3, TR4 only
16	8208206	1	-	-	-	HOUSING .. Fuel filler - SW8,SW9,TR5,TR6 only
17	8045894	-	-	1	-	HOUSING .. Fuel filler
18	8015648	1	-	-	-	GASKET .. Filler housing to 2 inch flange - Use with 8042361 housing
19	8041732	1	-	-	-	GASKET .. Filler housing to fuel tank - Use with 8208206 housing
20	117423	-	-	6	-	SCREW .. Filler housing to skirt - 3/8-16 x 3/4 oval hd. slotted
21	8135485	-	-	-	1	FILLER .. Fuel tank - 3 M.P.T.
22	8042029	-	-	-	1	CAP ASY. .. Fuel filler - 2-1/2 P.T. - See Plate 726-1
23	8066168	-	-	-	1	SCREEN .. Filler
24	8204178	-	-	-	1	BODY .. Filler - 3 M.P.T. x 2-1/2 F.P.T. for cap - Has lugs for quarter turn external connection
*25	219062	-	-	-	1	BUSHING .. Face type reducing - 4 M.P.T. x 3 I.P.S. - GP7 only

NOTE: Ref. No. 26 is not a locomotive part. This item is used to attach an external fuel line to a locomotive fuel filler body having lugs for a quarter turn connection.

26	8044586	-	1	-	1	COUPLING .. Quarter turn hose
27	8174245	-	1	-	1	GASKET .. Coupling

8058453 8161258

P. L. No. E726

FUEL TANK FILLER

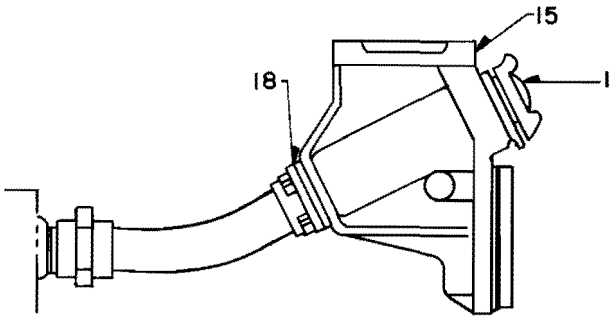

SW1,NW2,NW4,NW5,SW7,TR2,
TR3,TR4 LOCOMOTIVES

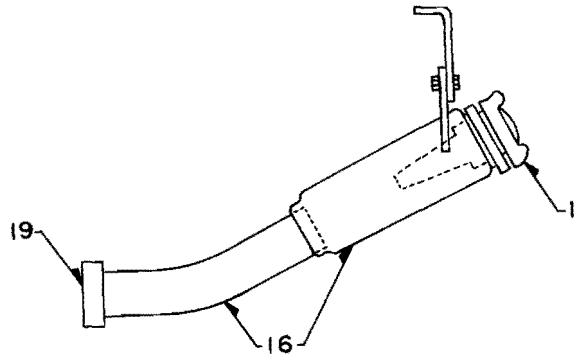

SW8,SW9,TR5,TR6 LOCOMOTIVES

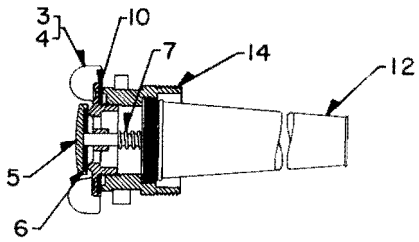

Part No. 8059242
SW1,NW2,NW5,TR2,SW8,SW9 LOCOMOTIVES
FUEL FILLER WITH QUARTER TURN
CONNECTION LUGS ON BODY

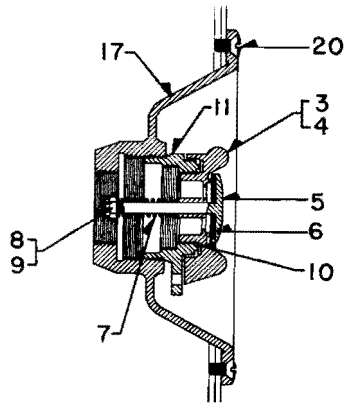

NW3 LOCOMOTIVE

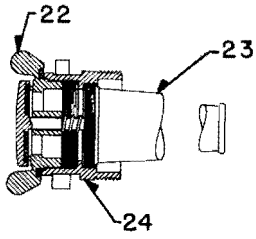

Part No. 8135485
NW2,SW7,SW8,SW9,GP7 LOCOMOTIVES
FUEL FILLER WITH 2-1/2 F.P.T. ON BODY
AND QUARTER TURN CONNECTION LUGS

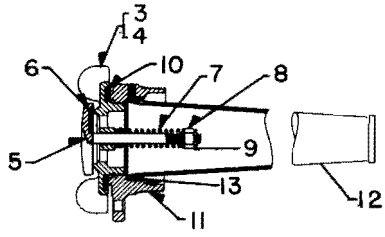

Part No. 8008584
SW1,NW2,NW4,SW7,TR2,TR3,TR4
LOCOMOTIVES

SW1,NW2,NW3,NW4,NW5,SW7,SW8,SW9,TR2,TR3,TR4,TR5,TR6,GP7 LOCOMOTIVES

PLATE D726-2

Parts List No. G728

FUEL TANK OIL LEVEL GAUGE

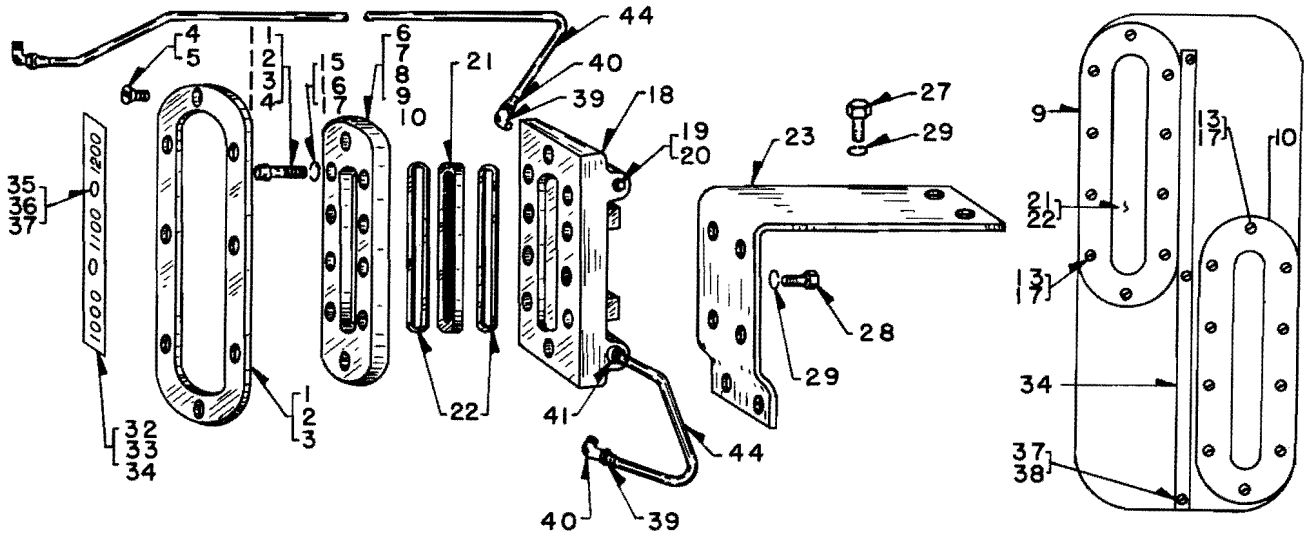

PLATE F728-1

Ref. No.	Part Number	Number Required								Description
		A	-	-	-	-	-	-	-	FUEL LEVEL GAUGE - SW1, NW2, SW7
		-	B	-	-	-	-	-	-	FUEL LEVEL GAUGE - FT - From P.L. 711
		-	-	C	-	-	-	-	-	FUEL LEVEL GAUGE - F2, F3, F7, FP7, F9, FL9 - From P. L. 703
		-	-	-	D	-	-	-	-	FUEL LEVEL GAUGE - GP7, GP9 - From P. L. 709
		-	-	-	-	E	-	-	-	FUEL LEVEL GAUGE - E8 - From P. L. 707
		-	-	-	-	-	F	-	-	FUEL LEVEL GAUGE - E7 - From P. L. 704
		-	-	-	-	-	-	G	-	FUEL LEVEL GAUGE - E3, E4, E5, E6 - From P. L. 704
		-	-	-	-	-	-	-	H	FUEL LEVEL GAUGE - SD7, SD9
PLATE . . Fuel Level Gauge Cover										
1	8097354	-	1	-	-	1	1	1	-	PLATE . . Cover gauge
2	8094691	-	-	1	-	-	-	-	-	PLATE . . Cover gauge
3	8146657	-	-	-	1	-	-	-	-	PLATE . . Cover gauge
4	172056	-	-	8	8	8	-	-	-	SCREW . . Tapping - 1/4-20 x 3/4 oval hd.
5	173145	-	8	-	-	-	8	8	-	SCREW . . Tapping - 1/4-20 x 1/2 oval hd. - Stainless
HOUSING . . Fuel Level Gauge										
6	8020746	1	-	-	-	-	-	-	-	HOUSING . . Fuel gauge glass
7	8097353	-	1	-	-	1	1	-	-	HOUSING . . Fuel gauge glass
8	8068697	-	-	1	-	-	-	-	-	HOUSING . . Fuel guage glass
9	8159347	-	-	-	1	-	-	-	1	HOUSING . . Fuel gauge glass - Upper on SD7-SD9
/10	8190392	-	-	-	-	-	-	-	1	HOUSING . . Fuel gauge glass - Lower on SD7-SD9
11	179822	10	-	-	-	-	-	-	-	BOLT . . Housing mounting - 5/16-18 x 1-1/2 hex. hd.
12	187158	-	10	-	-	10	10	10	-	SCREW . . Mach. - Housing mounting - 1/4-20 x 1-1/4 fil. hd. stainless

P. L. No. G728

FUEL TANK OIL LEVEL GAUGE

Ref. No.	Part Number	Number Required								Description
		A	B	C	D	E	F	G	H	FUEL LEVEL GAUGE (continued)
13	132277	-	-	10	-	-	-	-	10	SCREW .. Mach. - Housing mounting - 1/4-20 x 1-1/4 fil. hg. cadium
14	114539	-	-	-	10	-	-	-	-	SCREW .. Mach. - Housing mounting - 1/4-20 x 1-1/4 fil. hd. plain
15	103320	10	-	-	-	-	-	-	-	WASHER .. Lock - 5/16 in.
16	103319	-	10	-	-	-	-	10	-	WASHER .. Lock - 1/4 in.
17	8035649	-	-	10	10	10	10	-	10	WASHER .. Lock - 1/4 special
FRAME . . Fuel Level Gauge										
18	8015781	-	1	1	1	1	1	1	-	FRAME .. Fuel level gauge
19	112304	-	2	2	-	-	2	2	-	PLUG .. Pipe - Brass - 3/8 sq. hd.
20	103879	-	-	-	2	2	-	-	-	PLUG .. Pipe - Steel - 3/8 sq. hd.
GLASS AND GASKET . . Fuel Level Gauge										
21	8020008	1	1	1	1	1	1	1	1	GLASS .. Fuel gauge
22	8018990	2	2	2	2	2	2	2	2	GASKET .. Fuel gauge glass
MOUNTING PARTS . . Fuel Gauge Frame										
23	8015785	-	1	1	-	-	-	1	-	SUPPORT .. Gauge frame mounting
*24	8157525	-	-	-	1	-	-	-	-	PLATE .. Gauge frame mounting
*25	8173267	-	-	-	-	1	-	-	-	BRACKET .. Gauge frame mounting
*26	8080278	-	-	-	-	-	1	-	-	SUPPORT .. Gauge frame mounting
27	179839	-	4	4	4	-	4	4	-	BOLT .. Frame to plate - Plain - 3/8-16 x 1 hex. hd.
28	180122	-	-	-	-	4	-	-	-	BOLT .. Bracket to frame - Cadium - 3/8-16 x 1 hex. hd.
29	120382	-	-	-	-	4	-	-	-	WASHER .. Lock - 3/8 in.
*30	8095498	-	-	1	-	-	1	1	-	PAD .. Tapping
*31	8095499	-	-	1	-	-	1	1	-	PAD .. Tapping
PLATE . . Fuel Gauge Calibration										
32	8192995	-	-	1	-	-	-	-	-	PLATE .. Calibration - 1000 to 1200 gal.
33	8211174	-	-	-	1	-	-	-	-	PLATE .. Calibration - 650 to 750 gal.
/34	8192501	-	-	-	-	-	-	-	1	PLATE .. Calibration - 850 to 1200 gal.
35	171591	-	-	2	2	-	-	-	-	SCREW .. 12-24 x 5/8 rd. hd.
36	171592	-	-	3	3	-	-	-	-	SCREW .. 1/4-20 x 3/4 flat hd.
/37	133556	-	-	-	-	-	-	-	3	SCREW .. 10-24 x 3/8 flat hd.
*/38	120217	-	-	-	-	-	-	-	3	WASHER .. Lock No. 10
TUBING AND TUBE FITTINGS . . Fuel Gauge Vent and Return										
39	118539	-	4	4	4	4	4	4	-	NUT .. Tube - 3/8 tube
40	8039169	-	2	2	2	2	2	-	-	ELBOW .. 3/8 tube x 3/8 M. P. T.
41	8040313	-	1	1	2	-	1	3	-	CONNECTOR .. 3/8 tube x 3/8 M. P. T.
*42	8040339	-	-	-	-	-	1	-	-	ELBOW .. 3/8 tube x 1/2 M. P. T.
43	8040397	-	-	-	-	-	1	-	-	TEE .. 3/8 tube
44	8116856	-	As Required						-	TUBING .. Copper - 3/8 O. D. - 25 ft.

/ Additional replacement parts for 1200 gallon tank with full length fuel indication.

P. L. No. G728

FUEL TANK OIL LEVEL GAUGE

FULL LENGTH GAUGE

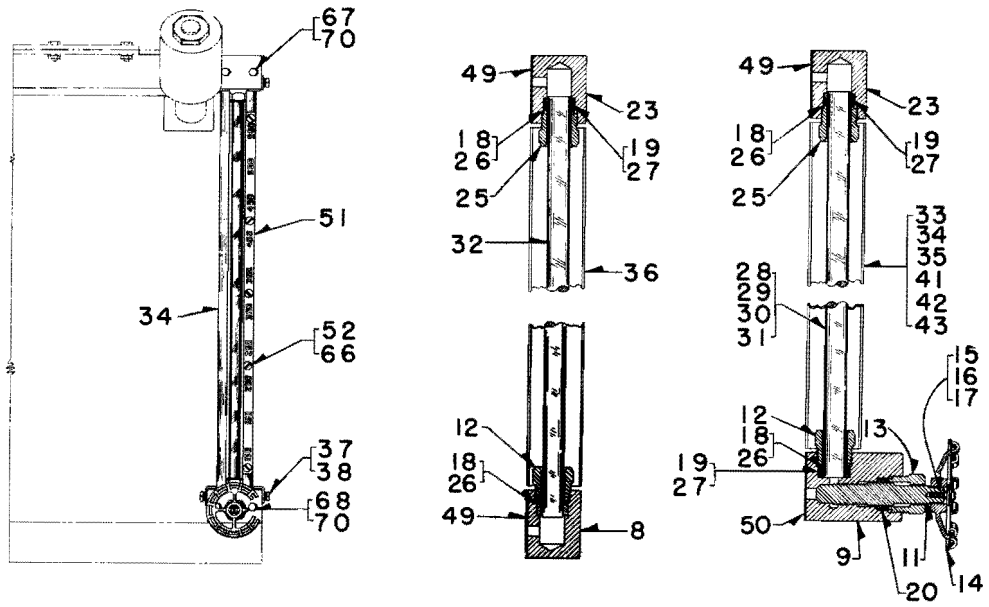

PLATE G728-3

Ref. No.	Part Number	Number Required						Description
* 1	8161177	A	-	-	-	-	-	GAUGE ASSEMBLY .. Fuel level - SW8, SW9, TR5, TR6 - 600 gal. tank
* 2	8170014	-	B	-	-	-	-	GAUGE ASSEMBLY .. Fuel Level - SW1, SW9, SW900, SW1200 TR5 - 900 Gallon Tank.
* 3	8171694	-	-	C	-	-	-	GAUGE ASSEMBLY .. Fuel level - F7, FP7
* 4	8171519	-	-	-	D	-	-	GAUGE ASSEMBLY .. Fuel level - GP7, GP9 - 800, 1100 and 1200 gal. tank - F7 with combination fuel and water tank
* 5	8171705	-	-	-	-	E	-	GAUGE ASSEMBLY .. Fuel level - E8 - 1200 gal. - Combination fuel and water tank
* 6	8176364	-	-	-	-	-	F	GAUGE ASSEMBLY .. Fuel level - F7, F9, FL9, SD7, GP7, GP9 - 1000 gal. tank

NOTE: Reference No's. 1 thru 6 are not recommended assemblies, order component parts. Parts listed for one side of tank only. Two applications required per tank.

BLOCK ASSEMBLY . . Lower - Fuel Level Gauge

* 7	8195967	1	1	1	1	-	1	BLOCK ASSEMBLY .. Lower fuel gauge
* 8	8195968	-	-	-	-	1	-	BLOCK ASSEMBLY .. Lower fuel gauge
9	8161168	1	1	1	1	-	1	BLOCK .. Gauge mounting
10	8161167	-	-	-	-	1	-	BLOCK .. Gauge mounting
11	8161169	1	1	1	1	-	1	STEM .. Valve
12	8161174	1	1	1	1	1	1	NUT .. Cap - Sight glass
13	8161175	1	1	1	1	-	1	NUT .. Cap - Valve stem
14	8162329	1	1	1	1	-	1	WHEEL .. Valve
15	110500	1	1	1	1	-	1	SCREW .. Valve wheel to stem - 10-24 x 1/2 rd. hd.
16	106497	1	1	1	1	-	1	WASHER .. Lock - No. 10
17	106620	1	1	1	1	-	1	WASHER .. Plain - 1/4 in.
18	8120777	1	1	1	1	1	1	WASHER .. Fiber - Sight glass - Repl. 8161176
19	8120779	1	1	1	1	1	1	WASHER .. Rubber - Sight glass - Repl. 8161176
20	8175384	1	1	1	1	-	1	RING .. Seal - Shut-off valve

P. L. No. G728

FUEL TANK LEVEL GAUGE

Ref. No.	Part Number	Number Required						Description
		A	B	C	D	E	F	
BLOCK ASSEMBLY . . Upper - Fuel Level Gauge								
21	8195968	1	-	1	1	1	1	BLOCK ASSEMBLY . . Upper fuel gauge
*22	8196047	-	1	-	-	-	-	BLOCK ASSEMBLY . . Upper fuel gauge
23	8161167	1	-	1	1	1	1	BLOCK . . Gauge mounting
*24	8170004	-	1	-	-	-	-	BLOCK . . Gauge mounting
25	8161174	1	1	1	1	1	1	NUT . . Cap - Sight glass
26	8120777	1	1	1	1	1	1	WASHER . . Fibre - Repl. 8161176
27	8120779	1	1	1	1	1	1	WASHER . . Rubber - Repl. 8161176
GLASS . . Sight - Fuel Level Gauge								
28	8161173	1	-	-	-	-	1	GLASS . . Sight - 5/8 O. D. x 23-1/2 in. lg.
29	8170012	-	1	-	-	-	-	GLASS . . Sight - 5/8 O. D. x 26-1/2 in. lg.
30	8171695	-	-	1	-	-	-	GLASS . . Sight - 5/8 O. D. x 17 in. lg.
31	8171565	-	-	-	1	-	-	GLASS . . Sight - 5/8 O. D. x 20 in. lg.
32	8171702	-	-	-	-	1	-	GLASS . . Sight - 5/8 O. D. x 21 in. lg.
GUARD . . Sight Glass - Fuel Level Gauge								
33	8170406	1	-	-	-	-	-	GUARD . . Sight glass - R. H. for 23-1/2 in. glass
34	8170407	1	-	-	-	-	-	GUARD . . Sight glass - L. H. for 23-1/2 in. glass
35	8170011	-	1	-	-	-	-	GUARD . . Sight glass - For 26-1/2 in. glass
36	8177206	-	-	-	-	2	-	GUARD . . Sight glass - For 21 in. glass
37	180073	4	4	-	-	4	-	BOLT . . Guard to block - 5/16-18 x 1/2 hex. hd.
38	120638	4	4	-	-	-	-	WASHER . . Lock - Heavy - 5/16
*39	120393	-	4	-	-	-	-	WASHER . . Plain - 5/16
*40	120214	-	-	-	-	4	-	WASHER . . Lock - Medium - 5/16
41	8171661	-	-	1	-	-	-	GUARD . . Sight glass - For 17 in. glass
42	8171511	-	1	-	-	-	1	GUARD . . Sight glass - For 20 in. glass
43	8176365	-	-	-	-	-	1	GUARD . . Sight glass - For 23-1/2 in. glass
*44	106973	-	-	4	4	-	4	BOLT . . Guard mounting - 5/16-18 x 1/2 hex. hd.
*45	103320	-	-	4	4	-	4	WASHER . . Lock - 5/16
SUPPORT . . Mounting - Fuel Level Gauge								
*46	8170013	-	1	-	-	-	-	SUPPORT . . Fuel gauge mounting
*47	179850	-	2	-	-	-	-	BOLT . . Support mounting - 3/8-16 x 2-3/4 hex. hd. - Replaces 108618
*48	103321	-	2	-	-	-	-	WASHER . . Lock - 3/8
GASKET . . Fuel Level Gauge								
49	8161253	1	-	1	1	2	2	GASKET . . Upper gauge block
50	8161254	1	1	1	1	-	2	GASKET . . Lower gauge block

P. L. No. G728

FUEL TANK LEVEL GAUGE

Ref. No.	Part Number	Number Required						Description
		A	B	C	D	E	F	
PLATE . . Calibration - Fuel Level Gauge								
51	8181607	1	-	-	-	-	-	PLATE . . Calibation - 100 to 550 gal. reading
52	171575	5	-	-	-	-	-	SCREW . . Tapping - Calibration plate - 10-32 x 3/8 rd. hd.
*53	8181608	-	1	-	-	-	-	PLATE . . Calibration - 200 to 900 gal. reading
*54	8194357	-	-	1	-	-	-	PLATE . . Calibration - 150 to 650 gal. reading
*55	8194358	-	-	1	-	-	-	PLATE . . Calibration - 150 to 700 gal. reading - For F7, 1350 gal. tank
*56	8188881	-	-	-	1	-	-	PLATE . . Calibration - 100 to 500 ga. reading - For F7 - w/c F and W tank
*57	8187668	-	-	-	1	-	-	PLATE . . Calibration - 50 to 400 ga. reading - GP7 with 800 gal. tank
*58	8194879	-	-	-	1	-	-	PLATE . . Calibration - 50 to 650 gal. reading - GP7 with 1200 gal. tank
*59	8188685	-	-	-	-	1	-	PLATE . . Calibration - 100 to 1200 gal. reading
*60	8192148	-	-	-	1	-	-	PLATE . . Calibration - 100 to 550 ga. reading - For GP7
*61	8192996	-	-	-	-	-	1	PLATE . . Calibration - 200 to 1000 gal. reading - For F7
*62	8190478	-	-	-	-	-	1	PLATE . . Calibration - 200 to 1000 gal. reading - For F7, 1500 gal. tank
*63	8192760	-	-	-	-	-	1	PLATE . . Calibration - 100 to 700 ga. reading - For SD7, 1200 gal. tank
*64	8195681	-	-	-	-	-	1	PLATE . . Calibration - 200 to 1400 gal. reading - For SD7 with 1200 gal. tank
*65	8185969	-	-	-	-	-	1	PLATE . . Calibration - 100 to 1100 gal. reading - For GP7 1600 gal. tank
66	171575	-	5	4	4	6	5	SCREW . . Tapping - Calibration plate - 10-32 x 3/8 rd. hd.
67	100138	2	-	2	2	4	2	BOLT . . Gauge mounting - 3/8-16 x 2 hex. hd.
68	179851	2	-	2	2	-	-	BOLT . . Gauge mounting - 3/8-16 x 3 hex. hd. - Repl. 100140
*69	112593	-	2	-	-	-	2	BOLT . . Gauge mounting - 3/8-16 x 3-1/4 hex. hd.
70	103321	4	4	4	4	4	4	WASHER . . Lock - 3/8
*71	179841	-	2	-	-	-	-	BOLT . . Gauge to fuel tank - 3/8-16 x 1-1/4 hex. hd. - Replaces 100135
*72	429607	-	2	-	-	-	-	NUT . . Gauge to fuel tank bolt - 3/8-16 hex.
*73	8062251	-	-	-	-	1	-	VALVE . . Globe - Fuel oil shut-off - 3/8

P. L. No. G728

FUEL TANK OIL LEVEL GAUGE

FULL LENGTH GAUGE - NATHAN GLO-ROD

PLATE E728-4

Ref. No.	Part Number	Number Required					Description
* 1	8163741	A	-	-	-	-	GAUGE .. Fuel level - Right side - F7, FP7, 1200 gal. tank - Prior to November, 1950 - See Note 1
2	8163742	A	-	-	-	-	GAUGE .. Fuel level - Left side - F7, FP7, 1200 gal. tank - Prior to November, 1950 - See Note 1
* 3	8186408	-	B	-	-	-	GAUGE .. Fuel level - Right side - F7, FP7, F9, 1200 gal. tank - F7, F9, 1350 gal. tank
4	8186409	-	B	-	-	-	GAUGE .. Fuel level - Left side - F7, FP7, F9, 1200 gal. tank - F7, F9, 1350 gal. tank
* 4A	8194209	-	-	C	-	-	GAUGE .. Fuel level - Right side
* 4B	8194210	-	-	C	-	-	GAUGE .. Fuel level - Left side
* 5	8204185	-	-	-	D	-	GAUGE .. Fuel level - Right side - SD7, SD9, 1200 gal. tank - GP7, 1600 gal. tank - F7, 1500 gal. tank
6	8204186	-	-	-	D	-	GAUGE .. Fuel level - Left side - SD7, SD9, 1200 gal. tank - GP7, 1600 gal. tank - F7, 1500 gal. tank
* 7	8208214	-	-	-	-	E	GAUGE .. Fuel level - Right side - GP7, GP9, 800, 1100, 1200 gal. tank - F7 combination fuel and water tank
8	8208215	-	-	-	-	E	GAUGE .. Fuel level - Left side - GP7, GP9, 800, 1100, 1200 gal. tank - F7 combination fuel and water tank

NOTE 1: Prior to November, 1950, the full length gauge was installed on fuel tank at a slight angle, all gauges applied since are installed in a vertical position.

NOTE 2: Parts listed apply to one side of tank only. Two gauges required per tank.

BODY . . Fuel Level Gauge

9	8182939	1	-	-	-	-	BODY .. Fuel gauge - Right side - 17-1/2 in. mtg. bolt centers
10	8182940	1	-	-	-	-	BODY .. Fuel gauge - Left side - 17-1/2 in. mtg. bolt centers
11	8208804	-	1	-	-	-	BODY .. Fuel gauge - Right side - 17-1/2 in. mtg. bolt centers
12	8208803	-	1	-	-	-	BODY .. Fuel gauge - Left side - 17-1/2 in. mtg. bolt centers
12A	8240833	-	-	1	-	-	BODY .. Fuel gauge - Right side - 21-3/8 in. mtg. bolt centers
12B	8240835	-	-	1	-	-	BODY .. Fuel gauge - Left side - 21-3/8 in. mtg. bolt centers - Formerly 8340834
*13	8208494	-	-	-	1	-	BODY .. Fuel gauge - Right side - 24 in. mtg. bolt centers
14	8208498	-	-	-	1	-	BODY .. Fuel gauge - Left side - 24 in. mtg. bolt centers
*15	8208943	-	-	-	-	1	BODY .. Fuel gauge - Right side - 20-1/2 in. mtg. bolt centers
16	8208949	-	-	-	-	1	BODY .. Fuel gauge - Left side - 20-1/2 in. mtg. bolt centers

SHIELD . . Fuel Level Gauge

17	8182941	1	1	-	1	1	SHIELD .. Gauge
17A	8240832	-	-	1	-	-	SHIELD .. Gauge

P. L. No. G728

FUEL TANK OIL LEVEL GAUGE

Ref. No.	Part Number	Number Required A	B	C	D	E	Description
VALVE . . Shut-Off - Fuel Level Gauge							
18	8182942	2	-	-	-	-	VALVE . . Shut-off
19	8208497	-	2	-	2	2	VALVE . . Shut-off
19A	8240834	-	-	2	-	-	VALVE . . Shut-off
19B	8184060	2	-	-	-	-	RING . . Retaining - Shut-off valve
FRAME . . Window - Fuel Level Gauge							
20	8182943	12	10	12	16	14	FRAME . . Window
WINDOW . . Glo-Rod - Fuel Level Gauge							
21	8182944	1	-	1	-	-	WINDOW . . Glo-rod
22	8208809	-	1	-	-	-	WINDOW . . Glo-rod
23	8208493	-	-	-	1	-	WINDOW . . Glo-rod
24	8208945	-	-	-	-	1	WINDOW . . Glo-rod-Formerly 8208495
GASKET . . Window - Fuel Level Gauge							
25	8182945	1	-	1	-	-	GASKET . . Window
26	8208808	-	1	-	-	-	GASKET . . Window
27	8208492	-	-	-	1	-	GASKET . . Window
28	8208946	-	-	-	-	1	GASKET . . Window - Formerly 8208496
29	8182946	2	-	-	-	-	GASKET . . Gauge body to fuel tank - Repl. 8163779
30	8208491	-	2	-	2	2	GASKET . . Gauge body to fuel tank
30A	8198591	-	-	2	-	-	GASKET . . Gauge body to fuel tank
RING and FASTENERS . . Fuel Level Gauge							
31	8182947	2	2	4	2	2	RING . . "O" - Shut-off valve - 5/16 I. D. x 7/16 O. D.
32	8182948	1	1	1	1	1	RING . . "O" - Gauge shield - 1/2 I. D. x 11/16 O. D.
33	423554	16	-	-	-	-	FASTENER . . Frame - 1/4-20 x 7/16 hex. hd.
34	133046	-	14	16	20	18	SCREW . . Frame - 1/4-20 x 7/8 rd. hd. slotted
35	186493	2	-	2	2	2	FASTENER . . Shield - 1/4-20 x 5/8 rd. hd. slotted
36	120583	-	2	-	2	2	SCREW . . Shield - 1/4-20 x 5/8 rd. hd. slotted
37	8182949	2	-	-	-	-	RING . . "O" - Shutooff valve - 3/16 I. D. x 5/16 O. D.
GLO-ROD . . Fuel Level Gauge							
38	8182950	1	-	-	-	-	GLO-ROD . . Fuel gauge
39	8208807	-	1	-	-	-	GLO-ROD . . Fuel gauge
39A	8240831	-	-	1	-	-	GLO-ROD . . Fuel gauge
40	8208496	-	-	-	1	-	GLO-ROD . . Fuel gauge
41	8208944	-	-	-	-	1	GLO-ROD . . Fuel gauge
42	8182951	1	1	-	1	1	BOOT . . Glo-rod
FRAME . . Gauge - Fuel Level							
44	8184059	2	-	2	-	-	FRAME . . Gauge
45	8208805	-	2	-	-	-	FRAME . . Gauge
46	8208488	-	-	-	2	-	FRAME . . Gauge
47	8208947	-	-	-	-	2	FRAME . . Gauge
48	8184067	2	-	-	-	-	FRAME . . Gauge
49	8208806	-	2	-	-	-	FRAME . . Gauge
50	8208487	-	-	-	2	-	FRAME . . Gauge
51	8208948	-	-	-	-	2	FRAME . . Gauge
51A	8184061	-	-	2	-	-	FRAME . . Gauge
*52	455973	-	2	2	2	2	PIN . . Roll
53	189987	-	-	2	-	-	PLUG . . Body

P. L. No. G728

FUEL TANK OIL LEVEL GAUGE

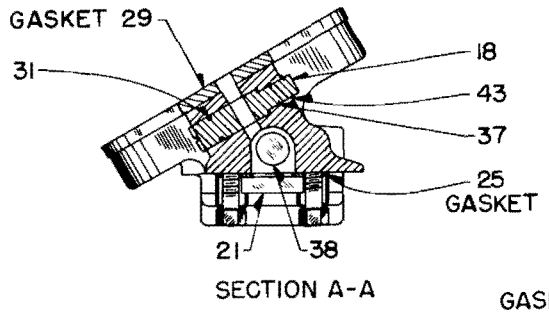

SECTION A-A

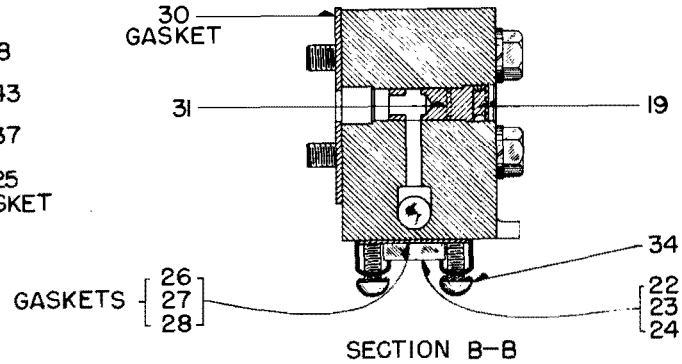

SECTION B-B

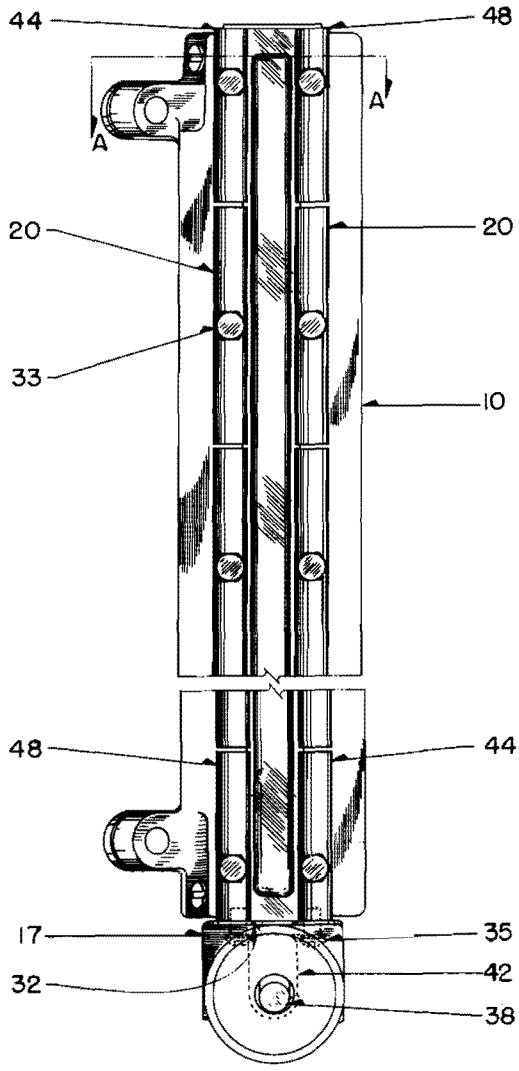

Ref. No. 2

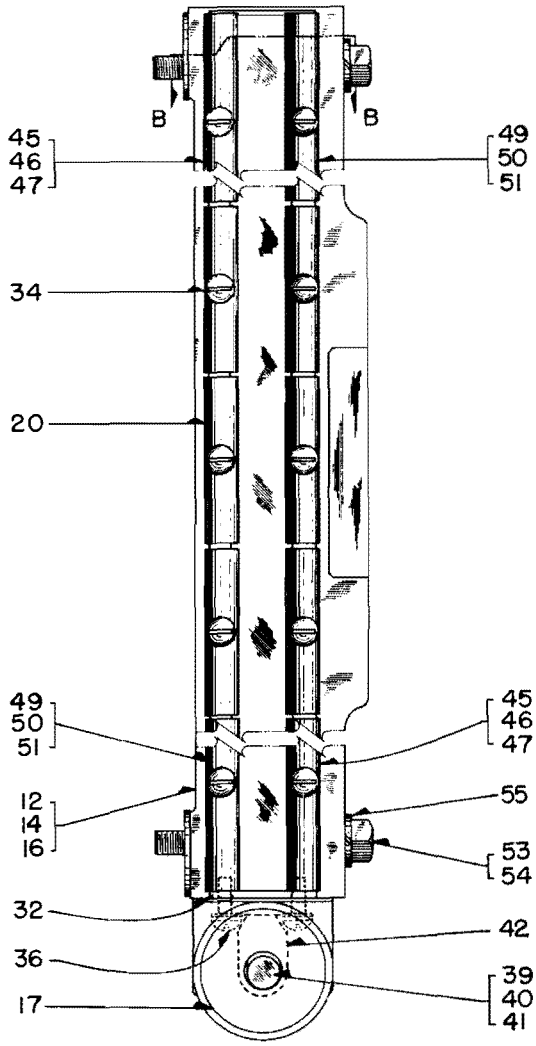

Ref. No. 4, 6 and 8

FULL LENGTH GAUGE (NATHAN GLO-ROD)

PLATE E728-4

Parts List No. E729

EMERGENCY FUEL CUT-OFF VALVE

ALL SWITCHER, SD7, SD9, GP7, GP9, TR9, TR12
F3, F7, FP7, F9, FP9, E8, E9 LOCOMOTIVES

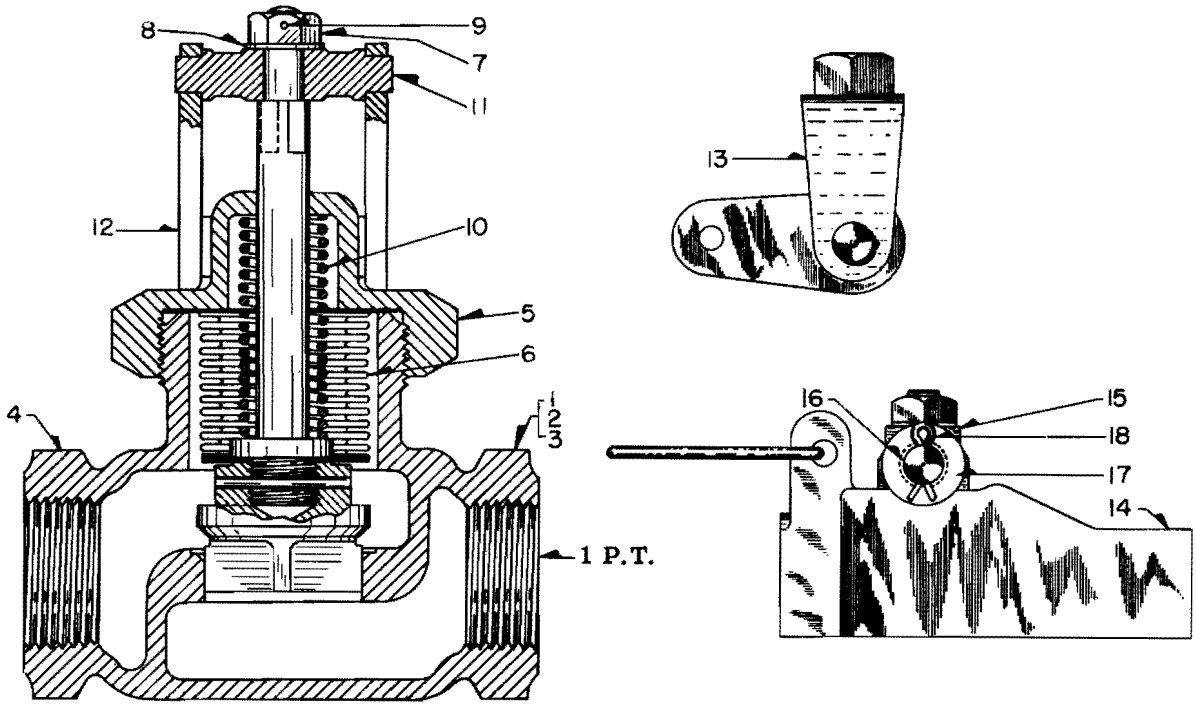

PLATE E729-1

Ref. No.	Part Number	No. Req.			Description
1	8083883	X	-	-	VALVE .. Emergency fuel cut-off - All switchers, SD7, TR9, TR12
2	8175543	-	X	-	VALVE .. Emergency fuel cut-off - F7, FP7, F9, FP9, GP7, GP9, SD9
3	8144807	-	-	X	VALVE .. Emergency fuel cut-off - E8, E9

NOTE: Cut-off valve 8083883 was originally furnished with 8039158 stem, 8039165 pin, and 8142612 disc as serviceable items. These items have been redesigned and are now furnished as 8177962 bellows asy..

4	8038916	1	1	1	BODY .. Valve
5	8039156	1	1	1	CAP... Valve
6	8177962	1	1	1	BELLOWS ASY.
7	8039159	1	1	1	NUT .. Valve stem
8	8039160	1	1	1	WASHER .. Valve stem
9	8039163	1	1	1	PIN
10	8039164	1	1	1	SPRING .. Valve
11	8039161	1	-	1	YOKE .. Valve tripping
12	8039162	1	-	-	HANDLE
13	8211383	-	-	1	YOKE ASY. .. Reset
14	8175544	-	1	-	CAM ASY. .. Reset
15	8175545	-	1	-	AXLE .. Yoke
16	8175546	-	2	-	ROLLER .. Yoke axle
17	103341	-	2	-	WASHER .. Plain - 3/8
18	103384	-	2	-	PIN .. Cotter - 1/4 x 3/4
*19	8008347	-	-	-	VALVE .. Emergency fuel cut-off - 1/2 P.T. - SW1, NW2, F3, F7

Parts List No. E730

FUEL OIL FILTER

F2, F3, F7, FP7, F9, FL9 AND FP9 LOCOMOTIVES

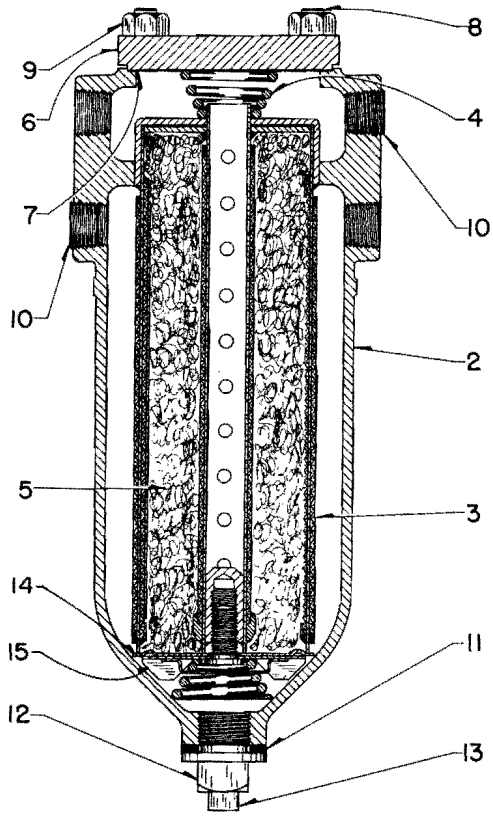

PLATE D730-1

Ref. No.	Part Number	No. Req.	Description
FILTER . . Dual Fuel			
1	8079494	1	FILTER . . Fuel oil
OIL FILTER COMPONENTS			
2	8014224	1	HOUSING . . Filter
3	8168109	1	CONTAINER . . Cartridge
4	8127236	2	SPRING . . Tapered coil
/ 5	8164725	1	CARTRIDGE . . Filter - See Plate 730-2
6	8079424	1	COVER . . Filter housing - Replaces 8079422
7	8014858	1	GASKET . . Filter cover to bushing
8	8014340	4	STUD . . Filter housing - 1/2-13 x 1-7/8 in. lg.
9	102637	4	NUT . . Filter housing - 1/2-13 hex. - Replaces 429608
10	103874	2	PLUG . . Pipe - 1/2 P. T. countersunk headless
11	8010874	1	GASKET . . Bottom filter plug to housing
12	8014130	1	PLUG . . Filter bottom - 1-5/8 in. dia.
13	103879	1	PLUG . . Pipe - 3/8 P. T. - Screws in filter bottom plug
14	8202553	1	WASHER . . Element
15	8202552	1	SPACER ASSEMBLY . . Element - Includes bolt, spring and cover

/ Element 8164725 recommended as replacement for 8 ounce bag wastex 8079818

P. L. No. E730

FULFLO FUEL FILTER CARTRIDGE

PART NO. 8164725

Our Engineering Department has recently completed a series of fuel filter element laboratory and field tests. The results of these tests proved that the highly efficient, skillfully engineered "Fulflo" fuel filter element is best suited to meet the rigid requirements for balanced design in our equipment. Among the more important features of the Fulflo element are:

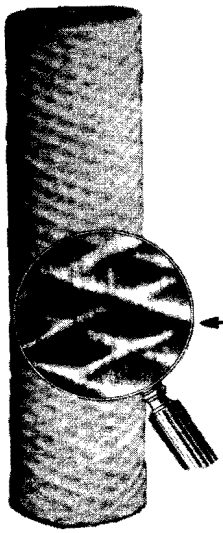

Magnified view of cartridge showing the fringed diamond-shaped filtering passage.

1. CONSTRUCTION - The cartridge is made of pure cotton cellulose yarn specially processed to remove oil gums and waxes. The yarn is wound under controlled tension over an open metal core, forming a diamond-shaped network of uniform-density filtering sheets.

2. OPERATION - As the fuel oil passes through this series of filtering layers, the coarser impurities are removed at the outer walls. The smaller impurities are trapped as the oil reaches the inner layers of the progressively denser webs.

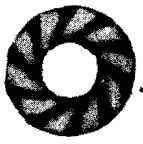

8164725

Filtering tunnels are curved and tapered, increasing in density toward discharge point.

3. DEPTH FILTRATION - The principle of progressive filtration through the entire thickness of the cartridge reduces to a minimum the objectionable surface - clogging common to other filters.

FILTER ELEMENT

4. LONG LIFE - Every layer of the cartridge is a filtering sheet. Full depth filtration makes possible a longer filtering life.

5. LOW COST - Filtering costs are reduced because of less frequent change-outs, elimination of repacking operations, plus increased filter efficiency.

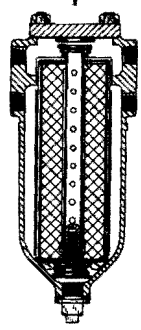

Filter 8079494

Parts List No. E732

FULFLO FUEL OIL FILTER

SW1, NW2, SW7, TR, E7, FT, F2, F3, F7, F9, FP7, FP9 LOCOMOTIVES

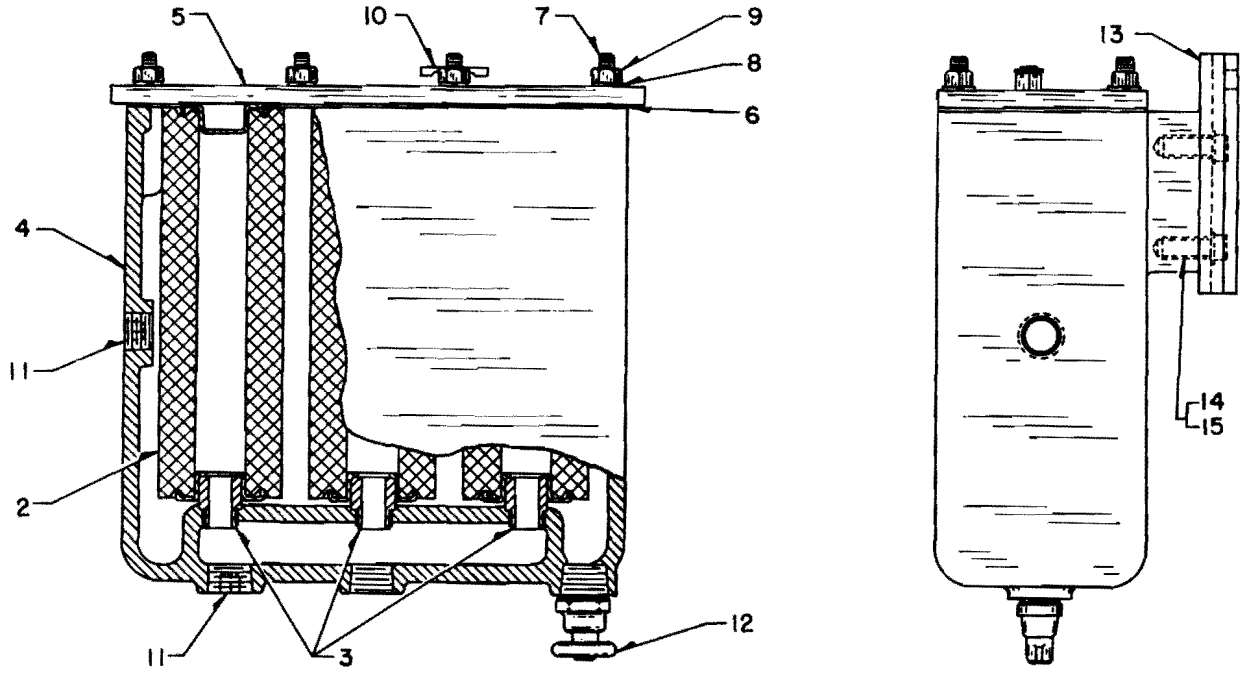

PLATE D732-1

Ref. No.	Part Number	No. Req.	Description
FILTER . . Fulflo Fuel Oil			
1	8132295	X	FILTER . . Fulflo fuel oil
CARTRIDGE and ADAPTER SEAT BUSHING . . Fuel Oil Filter			
2	8059961	3	CARTRIDGE . . Filter
3	8064851	3	SEAT . . Cartridge and adapter bushing
SHELL . . Fuel Oil Filter			
4	8064847	1	SHELL . . Filter
5	8064846	1	COVER . . Filter shell
6	8059975	1	GASKET . . Filter cover to shell
7	8064850	8	STUD . . Filter shell
8	103321	8	WASHER . . Lock - 3/8
9	103026	8	NUT . . 3/8 hex.
10	103647	1	COCK . . Vent drain - 1/4 P. T. brass
11	103874	3	PLUG . . Pipe - Countersunk headless - 1/2-14
12	8064849	1	COCK . . Drain 1/2 P. T. brass
MOUNTING BRACKET . . Fuel Oil Filter			
13	8064848	1	BRACKET . . Filter mounting
14	179839	4	BOLT . . Filter mounting to shell - 3/8-16 x 1 hex. hd. - Replaces 100134
15	103321	4	WASHER . . Lock - 3/8

P. L. No. E732

FULFLO FUEL FILTER CARTRIDGE
PART NO. 8059961

Our Engineering Department has recently completed a series of fuel filter element laboratory and field tests. The results of these tests proved that the highly efficient skillfully engineered "Fulflo" fuel filter element is best suited to meet the rigid requirements for balanced design in our equipment. Among the more important features of the Fulflo element are:

1. CONSTRUCTION - The cartridge is made of pure cotton cellulose yarn specially processed to remove oil gums and waxes. The yarn is wound under controlled tension over an open metal core, forming a diamond-shaped network of uniform-density filtering sheets.

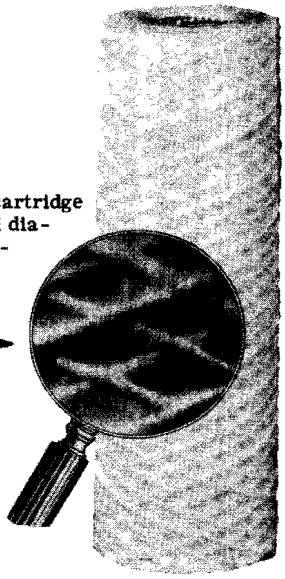

Magnified view of cartridge showing the fringed diamond-shaped filtering passage.

2. OPERATION - As the fuel oil passes through this series of filtering layers, the coarser impurities are removed at the outer walls. The smaller impurities are trapped as the oil reaches the inner layers of the progressively denser webs.

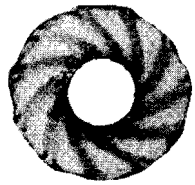

Filtering tunnels are curved and tapered, increasing in density toward discharge point.

8059961

3. DEPTH FILTRATION - The principle of progressive filtration through the entire thickness of the cartridge reduces to a minimum the objectionable surface - clogging common to other filters.

4. LONG LIFE - Every layer of the cartridge is a filtering sheet. Full depth filtration makes possible a longer filtering life.

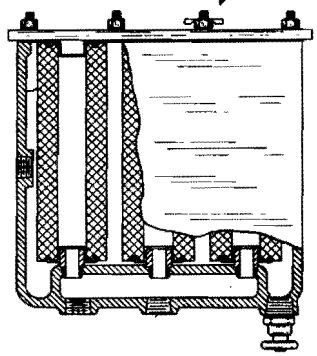

Fulflo Filter 8132295

5. LOW COST - Filtering costs are reduced because of less frequent change-outs, elimination of repacking operations, plus increased filter efficiency.

Parts List No. C734

COMBINATION FUEL OIL SIGHT GLASS AND RELIEF VALVE

E3, E4, E5, E6, E7, FT LOCOMOTIVES

PLATE B734-1

Ref. No.	Part Number	No. Req.		Description
VALVE ASSEMBLY . . Combination Fuel Oil Sight Glass and Relief				
1	8059617	A	-	VALVE ASSEMBLY . . Combination fuel oil sight glass and relief - Replaced by 8065068
2	8065068	-	B	VALVE ASSEMBLY . . Combination fuel oil sight glass and relief - E3, E4, E5, E6, E7, FT locomotives
SIGHT GLASS AND VALVE COMPONENTS				
3	8054200	3	3	GLASS . . Sight
4	8054201	3	3	TUBE . . Flared
5	8054202	8	6	GASKET . . Flared tube and sight glass
6	8054204	6	3	GASKET . . Valve cap bushing to body
7	8065048	-	3	NUT . . Adjusting screw lock - 1/2 inch
8	8065049	-	3	DISC . . Valve
9	8065050	-	3	SCREW . . Adjusting - 1/2 inch
10	8065051	-	3	CAP . . Valve
11	8065052	-	2	RING . . Regulating
12	8065053	-	6	WASHER . . Spring - 1/2 inch
13	8065054	-	3	STEM
14	8054206	1	-	SPRING . . Relief valve - 5 lb.
*15	8054207	1	-	SPRING . . Relief valve - 100 lb.
*16	8054208	1	-	SPRING . . Relief valve - 30 lb.
17	8065055	-	2	SPRING . . Relief valve - 65 and 100 lb.
18	8065075	-	1	SPRING . . Relief valve - 5 lb.
*19	8065071	1	-	GASKET . . 30 lb. glass - Use 8054204 on 5 and 100 lb. glass
20	8065061	-	3	BUSHING . . Glass retainer
21	8065070	-	3	BUSHING . . Valve seat
22	8060552	3	-	PISTON . . Relief valve
23	8054203	3	-	CYLINDER . . Relief valve
24	8065072	-	3	BUSHING . . Valve cap
25	8054198	3	-	BUSHING . . Glass retaining
26	8054197	3	-	PLUG . . Valve
27	103877	1	1	PLUG . . Pipe - 1/8 inch square head
28	8113712	-	A. R.	PACKING . . Graphite
29	102928	-	2	SCREW . . Set - 1/4-20 x 7/8 square head
30	109084	-	2	NUT . . Lock - 1/4-20 hex. - Replaces 451395 and 174843

P. L. No. C734

COMBINATION FUEL OIL SIGHT GLASS AND RELIEF VALVE

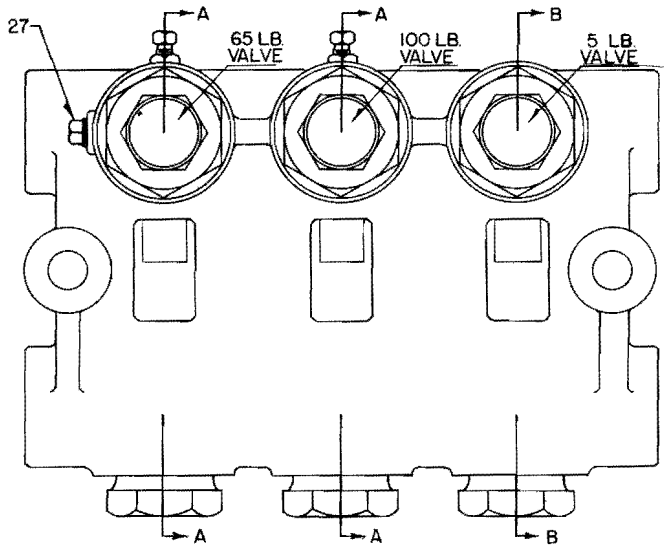

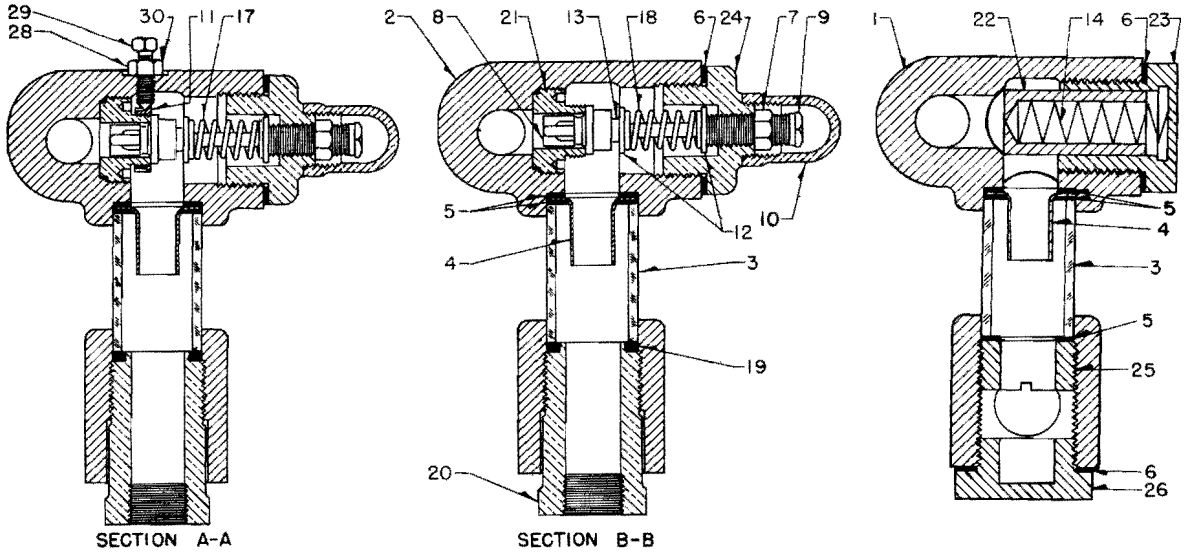

PLATE C734-1

P. L. No. C734

COMBINATION SIGHT GLASS AND RELIEF VALVE ASSEMBLY

(Not Illustrated)

NOTE 1: Improved combination sight glass and relief valve assembly 8065068 replaces 8059617 valve as a complete assembly only.

Fuel oil piping alteration parts required for changeover are listed in the following text. Quantities are for one engine only.

NOTE 2: For necessary fuel piping alteration drawings (8065282 for freight - 8065283 for passenger) contact our Service Department.

Ref. No.	Part Number	No. Req.		Description
		A	-	E7 Locomotive Application
		-	B	FT Locomotive Application
1	8065068	1	1	VALVE ASY. .. Relief - Combination sight glass - Replaces 8059617 valve assembly - See P. L. No. 734
2	8065227	1	1	TEE .. Reducing - 3/4 x 1/2 x 1/2 solder
3	8073299	3	3	NIPPLE .. Close - 1/2
4	8061459	3	1	NIPPLE .. Close - 1/2
5	179702	3	1	UNION .. Female - 1/2
6	179644	1	-	TEE .. Reducing - 1/2 x 3/8 x 1/2
7	8133013	A.R.	A.R.	TUBING .. Copper - 3/4 - 20 ft. lg.
8	8166871	A.R.	A.R.	PIPE .. Brass - 1/2 - 12 ft. lg.
9	8062372	1	1	VALVE .. Angle - 1/2 solder
10	118804	1	-	UNION .. Tube - 1/2
11	8062287	1	1	TEE .. 1/2 solder
12	113177	1	1	PLUG .. Pipe - 3/4
13	8074202	1	1	TEE .. 3/4 solder
14	179729	-	1	ELBOW .. Union - 1/2 - 90°
15	8116511	-	A.R.	TUBING .. Copper - 1/4 - 50 ft. lg.
16	116453	-	1	ELBOW .. 1/4 tube x 1/4 P.T.
17	144051	-	1	BUSHING .. Reducing - 1/2 x 1/4
18	8027428	-	1	CONNECTOR .. 1/2 tube x 1/2 M.P.T.
19	144089	-	2	TEE .. 1/2
20	8062374	-	1	ELBOW .. 1/2-90° solder

Parts List No. B735

RELIEF VALVE

FUEL OIL PRESSURE RELIEF VALVE

SW1, NW2, TR, TR3, TR4, F2, F3, F7, FP7, GP7, GP9, E8, E9, BL, SD9 LOCOMOTIVES

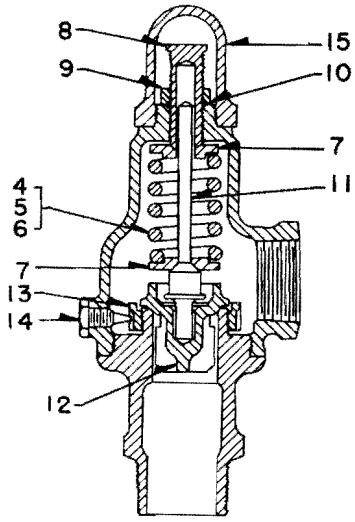

Ref. No. 1, 2, and 3
PLATE B735-1

Ref No.	Part Number	Number Required			Description
VALVE . . Relief					
1	8003961	X	-	-	VALVE . . Relief - 1/2 inch P. T. -5 lb. setting - Side outlet
2	8037889	-	X	-	VALVE . . Relief - 1/2 inch P. T. -35 lb. setting - Side outlet
3	8131058	-	-	X	VALVE . . Relief - 1/2 inch P. T. - 60 lb. setting - Side outlet
SPRING . . Relief Valve					
4	8065075	1	-	-	SPRING . . Relief valve
5	8196100	-	1	-	SPRING . . Relief valve
6	8249329	-	-	1	SPRING . . Relief valve
7	8065053	2	2	2	WASHER . . Relief valve spring
8	8065050	1	1	1	SCREW . . Adjusting
9	8065048	1	1	1	NUT . . Lock - Adjusting screw
10	8196102	1	1	1	PACKING . . Adjusting screw locknut
STEM . . Relief Valve					
11	8065054	1	1	1	STEM . . Relief valve
12	8065049	1	1	1	DISC . . Relief valve stem
13	8065052	1	1	1	RING . . Regulating
14	8196101	1	1	1	PLUG . . Locking - Regulating ring
CAP . . Relief Valve					
15	8065051	1	1	1	CAP . . Relief valve - Bonnet

Parts List No. C738

FUEL OIL FILTER

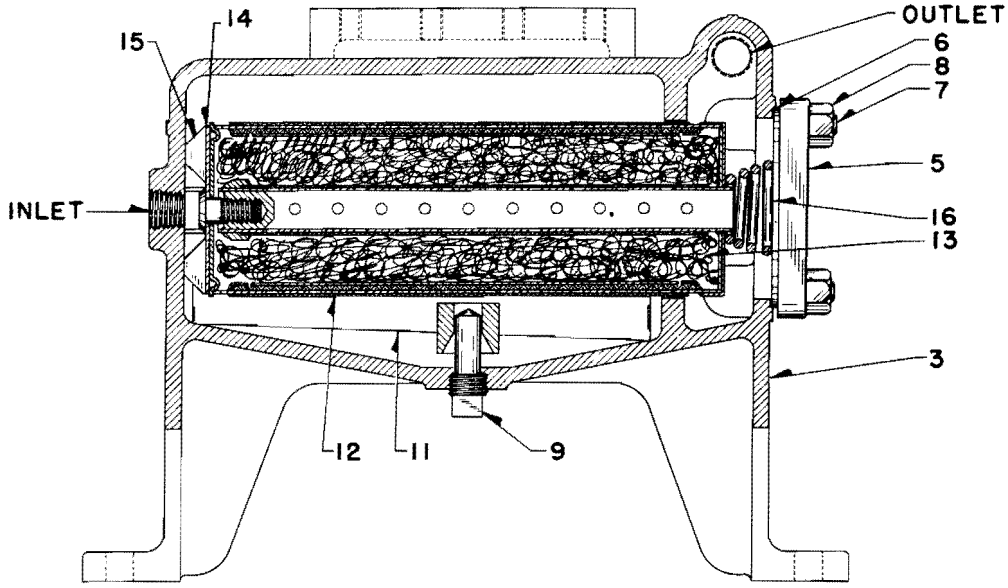

PLATE C738-1

Ref. No.	Part Number	No. Req.		Description
FILTER ASSEMBLY . . Fuel Oil				
* 1	8081492	X	-	FILTER ASSEMBLY . . Fuel oil - Replaces Purolator Assembly 8015685 - E7 locomotive
2	8098257	-	X	FILTER ASSEMBLY . . Fuel oil - SW1, NW2, TR2, TR3, and TR4 locomotives

NOTE: The Purolator filter element 8011462 used in assembly 8015685 has been replaced by the Fulfo filter cartridge 8164725. Ref. No's. 5, 6, 9, 11, 12, 13 and 16.

HOUSING . . Fuel Oil Filter				
3	8015686	1	1	HOUSING . . Filter - Replaces 8025380 - See Note
* 4	144034	4	-	BUSHING . . Housing
5	8079424	1	1	COVER . . Housing
6	8014858	1	1	GASKET . . Cover
7	8015731	4	4	STUD . . Housing
8	102637	4	4	NUT . . Stud - 1/2-13 hex. - Replaces 173685 and 429608
9	8079428	1	1	PLUG . . Drain
*10	187778	1	-	BUSHING . . Drain plug
ELEMENT CRADLE and CONTAINER . . Fuel Oil Filter				
11	8079427	1	1	CRADLE . . Element
12	8168108	1	1	CONTAINER . . Filter
⁄13	8164725	1	1	CARTRIDGE . . Filter - Fulflo - Replaces 8127899 element
14	8202553	-	1	WASHER . . Element
15	8202552	-	1	SPACER ASSEMBLY . . Element - Includes bolt, spring and cover
16	8127236	1	1	SPRING . . Tapered coil

⁄ Cartridge 8164725 recommended as replacement for 8 ounce bag of wastex 8079818.

Parts List No. B739

DUPLEX FUEL OIL FILTER

SW1 AND NW2 LOCOMOTIVES

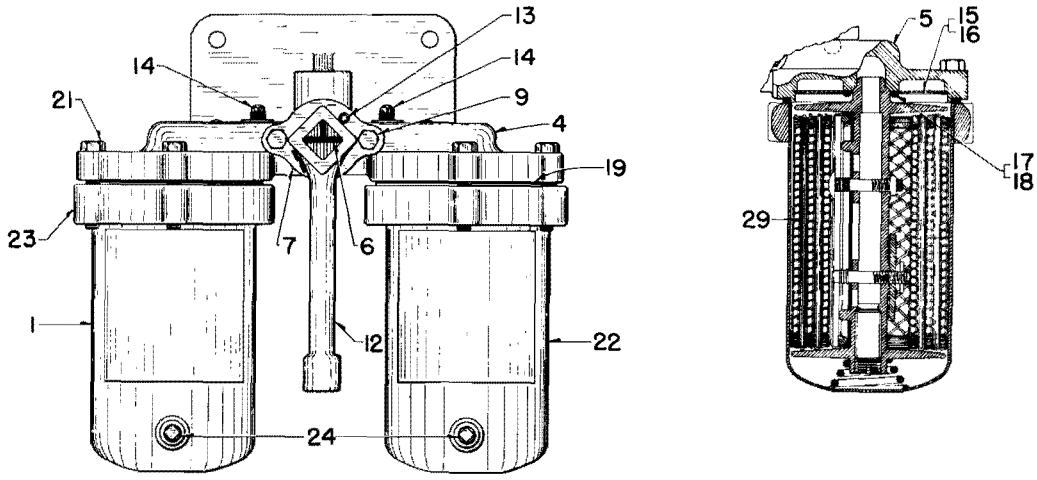

PLATE B739-1

Ref. No.	Part Number	No. Req.			Description
1	8088018	X	-	-	FILTER .. Duplex fuel oil - Type SV-0
* 2	8033946	-	X	-	FILTER .. Duplex fuel oil - Type LY-0 - Repl. by 8088018
* 3	8033822	-	-	X	FILTER .. Duplex fuel oil - Type MF-0 - Repl. by 8088018
4	8041417	1	-	-	VALVE ASSEMBLY .. Manifold
5	8087539	-	1	1	VALVE ASSEMBLY .. Manifold
6	8047147	1	1	1	PLUG .. Valve
7	8037243	1	1	1	GLAND .. Packing
* 8	8041419	-	1	1	PACKING .. Gland
9	100123	1	1	1	SCREW .. Cap - Gland to manifold - 5/16-18 x 1-1/4 hex. hd.
*10	8047148	1	1	1	PIN .. Valve stop
*11	8047149	1	1	1	GASKET .. Valve stop screw
12	8041422	1	1	1	HANDLE .. Valve
13	103376	1	1	1	PIN .. Cotter - Handle - 3/32 x 1-1/2
14	113175	4	4	4	PLUG .. Pipe - 1/8 inch
15	8041420	2	2	2	SCREEN .. Cover guard
16	8041421	2	2	2	PLATE .. Cover guard
17	112871	4	4	4	SCREW .. 6-32 x 5/16 lg. rd. hd.
18	106495	4	4	4	WASHER .. Lock - No. 6
19	8041057	2	-	-	GASKET .. Shell to valve
*20	8027651	-	2	2	GASKET .. Shell to valve
21	100138	6	6	6	SCREW .. Cap - Valve to shell - 3/8-16 x 2 hex. hd.
/22	8041415	2	-	-	SHELL ASSEMBLY .. Filter - See note
23	8027647	2	2	2	RING .. Cover bolt
24	113175	2	2	2	PLUG .. Pipe - Vent and drain - 1/8 in.
*25	8037499	-	-	1	COVER .. Filter - L.H.
*26	8037245	-	-	1	COVER .. Filter - R.H.
*27	8037593	-	-	2	GASKET .. Manifold to filter cover
*28	100029	-	-	4	SCREW .. Cap - Manifold to filter cover - 3/8-24 x 1-3/4 hex. hd.
29	8074522	2	2	2	ELEMENT .. Filter - Replaces 8037610 - See Plate 739-2

/ NOTE: When filter shells for 8033946 or 8033822 require replacement, it is recommended to replace the complete filter by the improved design filter assembly 8088018.

P. L. No. B739

DUPLEX FUEL OIL FILTER

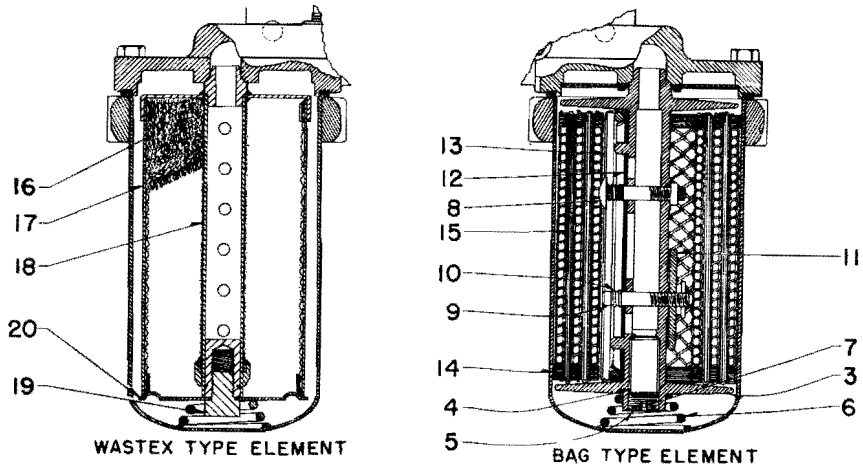

PLATE B739-2

Ref. No.	Part Number	No. Req.		Description
1	8037610	X	-	ELEMENT .. Filter - Bag type - Replaced by 8074522
2	8074522	-	X	ELEMENT .. Filter - Cartridge or wastex type
3	8027666	1	-	SPOOL .. Filter bag
4	8027668	1	-	PLUG .. By-pass
5	8027650	1	-	NUT .. By-pass adjustment
6	8027661	1	-	SPRING .. Shock
7	8027665	1	-	PIN .. Cotter
8	8027655	2	-	SCREW .. T-bolt clamp
9	8027662	2	-	PIN .. Clamp screw
10	8027656	2	-	SPRING .. Clamp screw
11	8027669	2	-	NUT .. Clamp screw
12	8027663	1	-	GASKET .. Filter bag to spool
13	8027649	1	-	RING .. Clamping
14	8027670	1	-	MAT .. Spacing
15	8027660	1	-	BAG .. Filter
†/16	8168889	-	1	CARTRIDGE .. Filter - See note
				NOTE: Cartridge 8168889 recommended as replacement for 9 ounce bag of wastex 8074599.
17	8087666	-	1	SHELL .. Filter
18	8087667	-	1	TUBE .. Center
19	8087665	-	1	SPRING ASY. .. Includes cap screw
20	8087668	-	1	WASHER .. Bottom

NOTE: When conversion is made from the "bag type" element to the "cartridge or wastex type" element, it is necessary to reverse the inlet and outlet connections so the fuel will flow through the element in the opposite direction. The screen and cover guard plates must also be removed.

/ 8104963 and 8159460 filter cartridge that is used in lube oil filter element 8168621 may be used in Nugent duplex fuel filter. Fuel filter container is longer than the lube oil filter element; therefore, the spacer plate and spring assembly, 8190905, must be used to insure a tight seal on the end of the cartridge.

Part List No. D740

FLAME ARRESTOR

ALL LOCOMOTIVES

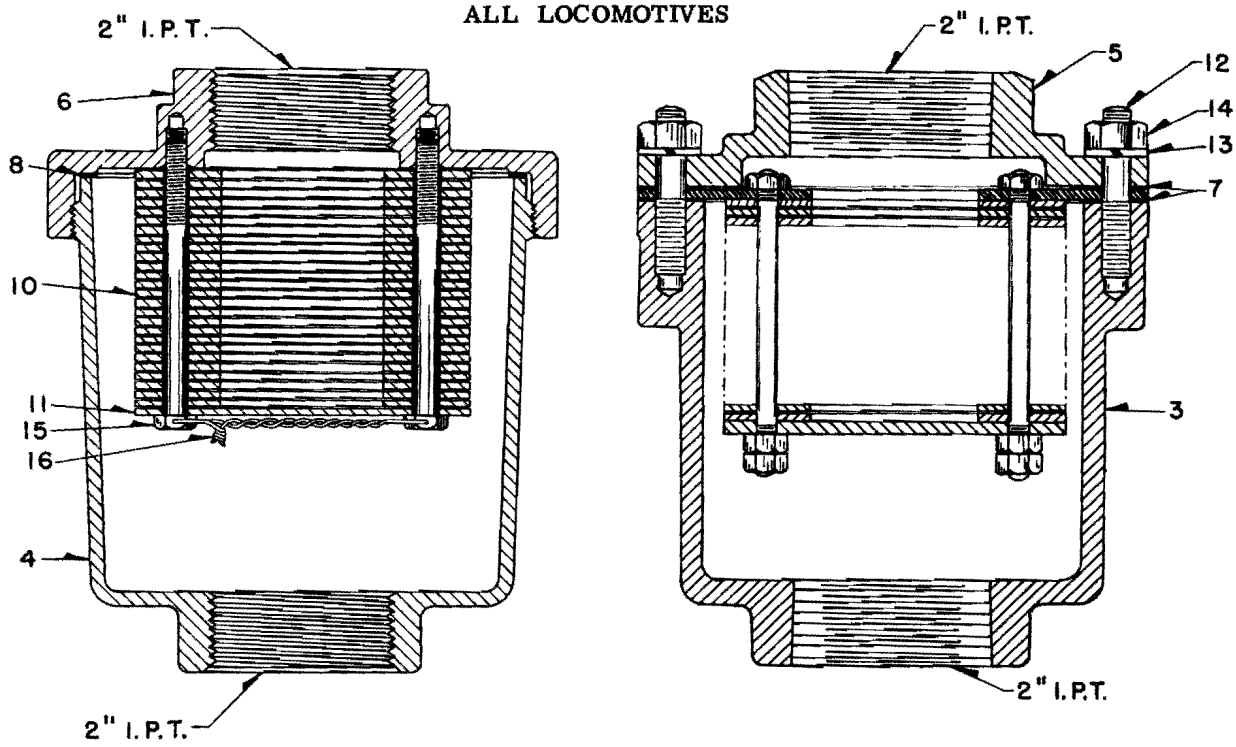

PART NO. 8167296 PLATE B740-1 PART NO. 8015809

Ref. No.	Part Number	No. Req.		Description
ARRESTOR . . Flame				
1	8015809	A	-	ARRESTOR . . Flame - FT, F2, F7, FP7, FL9, BL, E7, E8 - Replaced by 8167296
2	8167296	-	B	ARRESTOR . . Flame - All locomotives
FLAME ARRESTOR COMPONENTS				
3	8137469	1	-	BODY . . Flame arrestor
4	8167294	-	1	HOUSING . . Flame arrestor
5	8137470	1	-	CAP . . Flame arrestor body
6	8167291	-	1	COVER . . Flame arrestor housing
7	8137432	2	-	GASKET . . Cap to body
8	8167319	-	1	GASKET . . Cover to housing
9	8137431	1	-	GRID ASSEMBLY . . Element - Furnished as an assembly only
10	8167292	-	25	PLATE . . Flame arrestor
11	8167293	-	1	PLATE . . Blind
12	8137471	8	-	STUD . . Body
13	120382	8	-	WASHER . . Lock - 3/8
14	193228	8	-	NUT . . Body stud - 3/8-16 hex. - Replaces 174855
15	8167295	-	4	BOLT . . 1/4-20
16	8122066	-	A. R.	WIRE . . Lock - 20 ga. - Avail. 100 ft. lg.

DUAL FUEL FILTER

Parts List No. D741

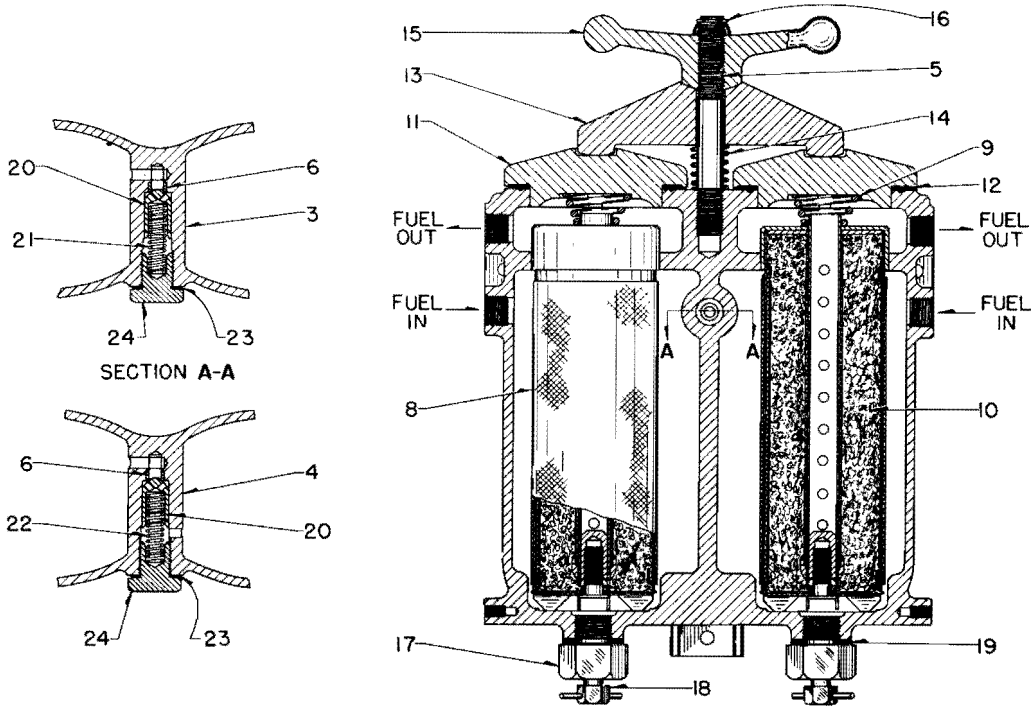

Ref. No. 1 and 2
PLATE A741-1

Ref. No.	Part Number	No. Req.		Description
FILTER . . Dual Fuel				
1	8147239	A	-	FILTER . . Dual fuel-SW8,9, 600, 900, 1200-TR9, 12-E8, E9, GP and SD
2	8124180	-	B	FILTER . . Dual fuel - BL
DUAL FUEL FILTER COMPONENTS				
3	8147238	1	-	HOUSING ASSEMBLY . . Dual fuel filter
4	8124181	-	1	HOUSING ASSEMBLY . . Dual fuel filter
5	8124179	1	1	STUD . . Crab - Housing cover - 3/4-10 x 6-1/4
6	8134576	1	1	SLEEVE . . Valve housing
* 7	103877	1	-	PLUG . . Pipe - 1/8 P. T. square head
8	8168108	2	2	CONTAINER . . Cartridge
9	8127236	2	2	SPRING . . Tapered coil
* 9A	8202553	2	2	WASHER . . Container
* 9B	8228908	2	2	SPACER . . Includes stud
10	8164725	2	2	CARTRIDGE . . Filter
NOTE: Element 8164725 recommended as a replacement for 8 ounce bag wastex 8079818.				
11	8124186	2	2	COVER . . Housing
12	8124185	2	2	GASKET . . Cover to housing
13	8124183	1	1	CRAB . . Hand wheel cover
14	8124182	1	1	SPRING . . Hand wheel cover crab
15	8085246	1	1	WHEEL . . Hand - Dual filter
16	8124184	1	1	RING . . Snap - Housing stud
17	8124187	2	2	BODY . . Drain valve
18	8124188	2	2	SCREW . . Drain valve
19	8010874	2	2	GASKET . . Drain valve body
20	8124189	1	1	PLUNGER . . Valve
21	8147236	1	-	SPRING . . Valve
22	8124190	-	1	SPRING . . Valve
23	8104175	1	1	WASHER . . Retainer - 29/32 - Copper
24	8104059	1	1	RETAINER . . Valve plunger

Parts List No. B743

FUEL SYSTEM

REDUCING RELIEF VALVE AND FILTER
ALL LOCOMOTIVES WITH REMOTE READING FUEL GAUGE

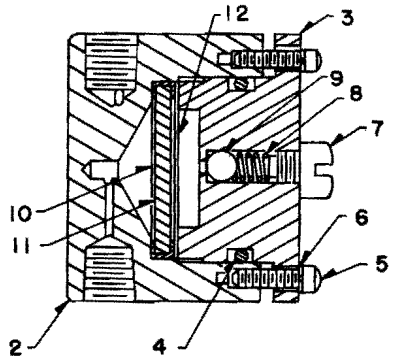

Ref. No. 1

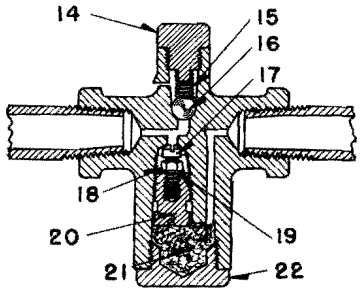

Ref. No. 13

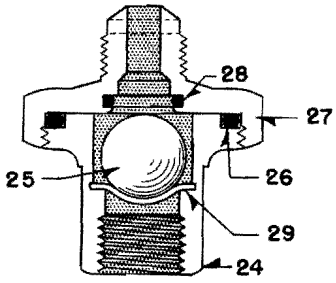

Ref. No. 23

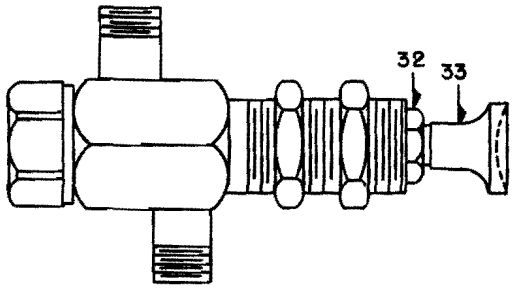

Ref. No. 30

PLATE B743-1

Ref. No.	Part Number	No. Req.	Description
1	8173974	X	VALVE ASY... Reducing relief
2	8173975	1	BODY .. Valve
3	8173972	1	PLUG .. Valve
4	8173973	1	GASKET .. Body
5	100713	4	SCREW .. 8-32 x 5/8 fil. hd.
6	106496	4	WASHER .. Lock - No. 10
7	8173977	1	SCREW .. Adjusting
8	8173976	1	SPRING .. Adjusting screw
9	453630	1	BALL .. 1/4 in. dia.
10	8173971	1	GASKET .. Plate
11	8129931	1	DISC .. Plate
12	8129930	1	PLATE
13	8135376	X	VALVE ASY... Reducing relief
14	8145328	1	SCREW .. Ball chamber - 5/16-24
15	8145327	1	SPRING .. Ball
16	8035377	1	BALL .. 1/4 in. dia.
17	8079009	1	SCREW .. Ball chamber
18	8079012	1	NUT .. Lock
19	8079011	1	WASHER
20	8079010	1	SCREW .. Throttling-Brass
21	8068156	1	PACKING .. Wool yarn - 2 oz. ball
22	8079013	1	CAP .. Strainer-Brass
23	8173964	X	VALVE ASY... Check-SeeNote
24	8175433	1	PLUG .. Valve - Brass
25	8175434	1	BALL .. Valve
26	8175435	1	RING .. "O"
27	8175432	1	CAP .. Valve - Brass
28	8175001	1	RING .. "O"
29	8194216	1	SCREEN .. Brass
30	8134734	X	VALVE ASY... Push button
*31	8165262	1	WASHER
32	8165263	1	NUT .. Packing
33	8165682	1	PLUNGER .. Valve
*34	8165264	1	SPRING
*35	453630	1	BALL .. 1/4 in. dia.
*36	8165681	1	WASHER
*37	8165266	1	SEAT .. Valve
*38	8165267	1	WASHER
*39	8165683	1	RING .. Retaining
*40	8049089	X	STRAINER ASY ... Air line
*41	8049090	1	PLUG .. Includes screen
*42	8068156	1	PACKING .. Wool yard - 2 oz. ball

NOTE: Check valve assembly 8173964 Ref. No. 23 used on E8 locomotives with combination fuel and steam generator water tank and hatch water tank at the gauge line connection to the tank.

Parts List No. D748

FUEL OIL STRAINER

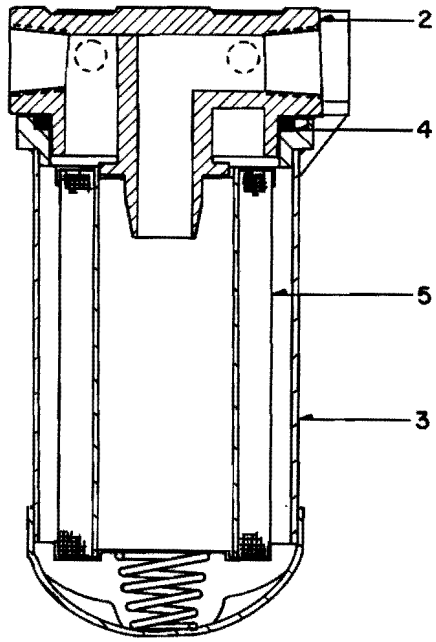

Ref. No. 1

PLATE D748-1

Ref. No.	Part Number	No. Req.	Description
STRAINER ASSEMBLY . . Fuel			
1	8341983	1	STRAINER ASSEMBLY .. Fuel suction
2	8344105	1	COVER .. Filter
3	8344104	1	SHELL .. Filter
4	8343161	1	RING .. "O" - Housing to cover
5	8344103	1	ELEMENT .. Filter - Wire mesh
* 6	179847	2	BOLT .. Cover to shell - 3/8-16 x 2 hex. head
* 7	103341	2	WASHER .. Plain - 3/8

P. L. No. D748

FUEL OIL STRAINER

Ref. No.	Part Number	No. Req.	Description
STRAINER ASSEMBLY . . Fuel			
1	8260930	1	STRAINER ASSEMBLY .. Fuel
2	8177027	1	HOUSING .. Fuel strainer
3	8325646	1	COVER .. Fuel strainer - Formerly 8177026
4	8177030	1	SEAL .. Cover to housing
5	8177025	1	YOKE .. Handwheel mounting
6	141037	2	SCREW .. Set - 1/2-13 x 1-1/4 headless
7	114505	2	NUT .. Jam - 1/2-13 hex.
8	8177024	1	HANDWHEEL ASSEMBLY .. Fuel strainer - Includes bolt
9	8261452	1	ELEMENT .. Fuel strainer
9A	8321929	1	GROMMET .. Element
10	8177035	1	STAND .. Pipe
11	103868	1	PLUG .. Drain - 1/2 P. T.

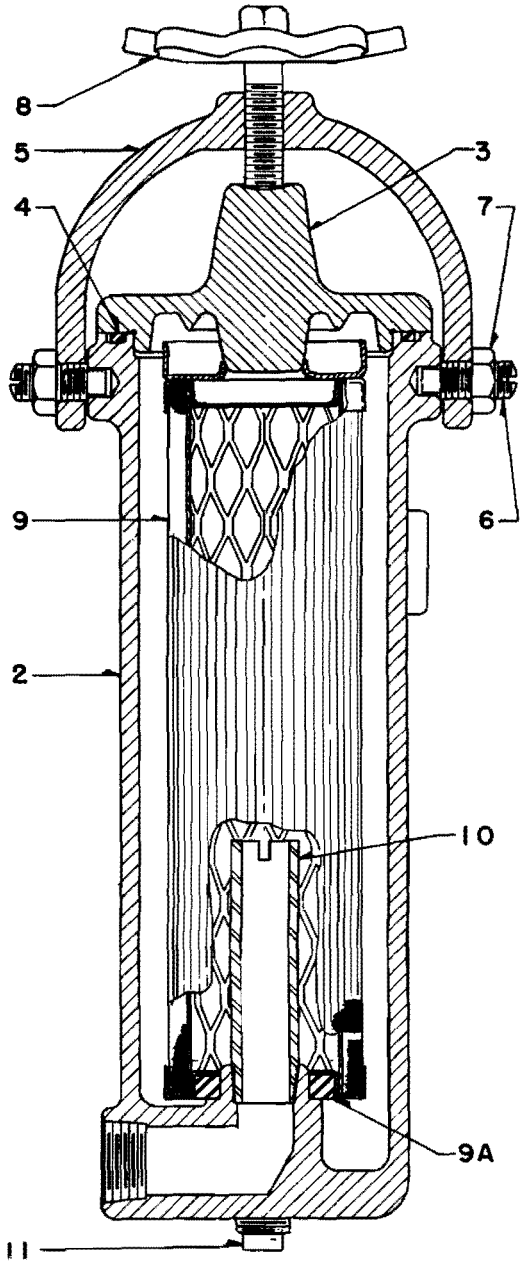

Ref. No. 1

PLATE A 748-2

Parts List No. C749

FUEL OIL FILTER

SINGLE CARTRIDGE FUEL OIL FILTER

PLATE C749-1

Ref. No.	Part Number	Number Required			Description
1	8356717	A	-	-	FILTER .. Fuel oil - Vertical mounted - Replaces 8306446 and 8288530
2	8306446	-	B	-	FILTER .. Fuel oil - Vertical mounted - Replaced by 8356717
3	8288530	-	-	C	FILTER .. Fuel oil - Horizontal mounted - Replaced by 8356717

Filter 8288530 Ref. No. 3 is no longer available. When replacement filter is required, use filter 8356717 Ref. No. 1 and Ref. Nos. 15 thru 27. Filter 8306446 Ref. No. 2 and 8356717 Ref. No. 1 are directly interchangeable.

COVER . . Filter

4	8213371	-	1	1	COVER .. Filter
5	8359422	1	-	-	COVER .. Filter
6	8253898	-	1	1	GASKET .. Cover
7	8358905	1	-	-	GASKET .. Cover
8	8359168	2	-	-	NUT .. Cover - 1/2-13 flanged hex.

CARTRIDGE . . Filter

9	8275432	1	1	1	CARTRIDGE .. Filter - Cageless
10	8035262	-	1	1	SPRING .. Cartridge hold down

PLUG .. Drain

11	103880	1	1	1	PLUG .. Drain - 1/2 M. P. T. square head

FITTINGS AND GASKETS

*12	8173563	2	2	-	FLANGE .. Swivel
*13	8261878	-	2	-	INSERT .. Swivel flange
*14	8231713	2	-	-	INSERT .. Swivel flange
*15	8306502	2	2	-	GASKET .. Swivel flange to filter
*16	179882	4	4	-	BOLT .. Flange to filter - 1/2-13 x 1-1/8 hex. head
*17	8306449	1	1	-	BRACKET .. Filter mounting - Upper
*18	8305753	1	1	-	BRACKET .. Filter mounting - Lower
*19	8283100	2	2	-	STRAP .. Filter mounting
*20	179885	4	4	-	BOLT .. Strap to bracket - 1/2-13 x 1-1/2 hex. head
*21	103323	4	4	-	WASHER .. Lock - 1/2
*22	102637	4	4	-	NUT .. 1/2-13 hex.
*23	8305754	1	-	-	TUBE ASSEMBLY .. Filter inlet
*24	8305756	1	-	-	TUBE ASSEMBLY .. Filter outlet
*25	8305757	1	-	-	TUBE ASSEMBLY .. Filter outlet - Manifold to elbow
*26	8152981	1	-	-	NIPPLE .. 1/2 P. T. x Sol. x 3
*27	144283	1	-	-	ELBOW .. 5/8 tube x 1/2 P. T.

P. L. No. C749

FUEL OIL FILTER

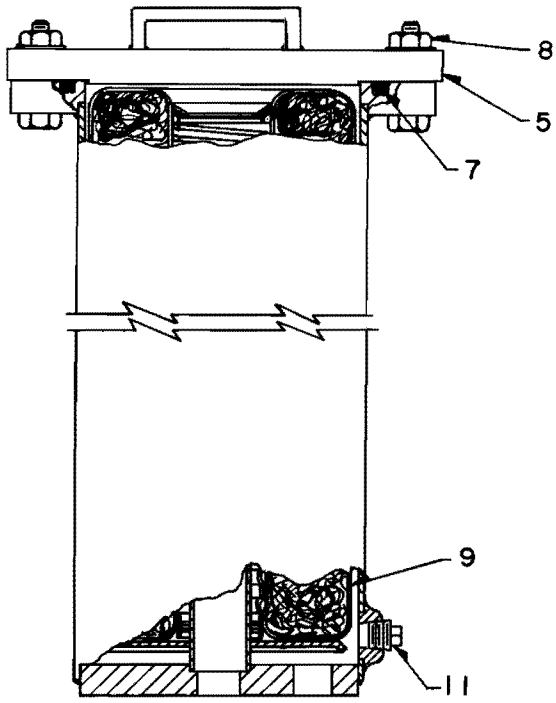

REF. NO. 1

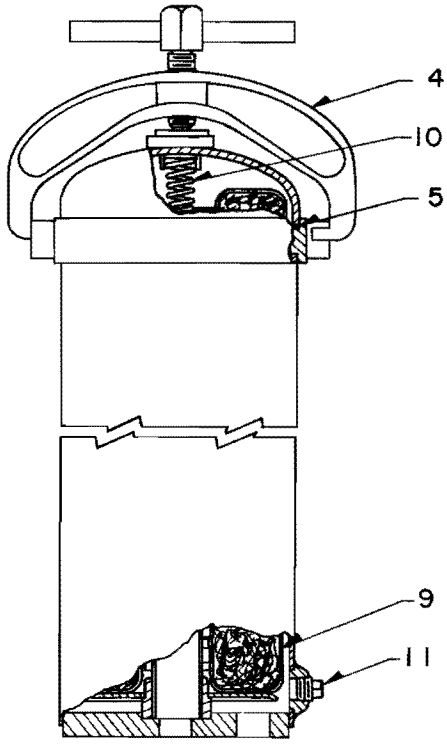

REF. NO. 2&3

PLATE C749-1

Parts List No. A780

FUEL OIL HEAT EXCHANGER

THERMOSTATIC MIXING VALVE

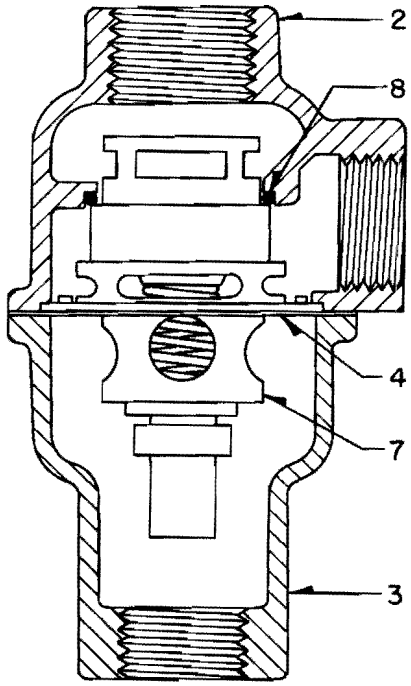

Ref. No. 1

PLATE A780-1

Ref. No.	Number	Req.	Description
VALVE . . Mixing - Thermostatic - Fuel Oil			
1	8243044	1	VALVE . . Mixing - Thermostatic - Fuel oil - 3/4 F. P. T.
HOUSING - Valve			
2	8247014	1	HOUSING . . Valve - Upper
3	8247017	1	HOUSING . . Valve - Lower
4	8247015	1	GASKET . . Housing to housing
* 5	180020	4	BOLT . . Housing to housing - 1/4-20 x 3/4 hex. hd.
* 6	120380	4	WASHER . . Lock - Housing to housing bolt - 1/4
ELEMENT ASSEMBLY . . Thermostat			
7	8247016	1	ELEMENT ASSEMBLY . . Thermostat
GASKET . . "O" Ring			
8	8175435	1	GASKET . . "O" ring

P. L. No. A780

FUEL OIL HEAT EXCHANGER

PLATE A780-2

Ref. No.	Part Number	No. Req.		Description
EXCHANGER ASSEMBLY . . Heat - Fuel Oil				
1	8211287	A	-	EXCHANGER ASSEMBLY .. Heat - Fuel oil - Replaced by 8220398
2	8220398	-	B	EXCHANGER ASSEMBLY .. Heat - Fuel oil
CORE AND SHELL ASSEMBLY . . Heat Exchanger				
3	8224796	1	-	CORE ASSEMBLY .. Heat exchanger - Includes shell and tubes
4	8234381	-	1	SHELL ASSEMBLY .. Heat exchanger - Includes tubes
BONNET . . Heat Exchanger				
5	8224798	1	-	BONNET .. Heat exchanger - Inlet and outlet end
6	8260396	-	1	BONNET .. Heat exchanger - Inlet and outlet end
7	8224799	1	-	BONNET .. Heat exchanger - Return end
8	8260544	-	1	BONNET .. Heat exchanger - Return end
9	8224800	1	-	GASKET .. Inlet and outlet end bonnet
10	8234382	-	1	GASKET .. Inlet and outlet end bonnet
11	8224801	1	-	GASKET .. Return end bonnet
12	8234383	-	1	GASKET .. Return end bonnet
13	179816	12	-	BOLT .. 5/16-18 x 3/4 hex. hd.
14	180124	-	8	BOLT .. 3/8-16 x 1-1/4 hex. hd.
15	120382	-	8	WASHER .. Lock - 3/8
CRADLE AND MOUNTING . . Heat Exchanger				
16	8224797	2	-	CRADLE ASSEMBLY .. Heat exchanger
17	8260539	2	-	BOLT .. "U"
18	8260540	4	-	NUT .. "U" bolt
19	8260542	-	2	MOUNTING .. Heat exchanger
20	8260543	-	2	BOLT .. "U"
21	120380	-	4	WASHER .. Lock - 1/4
22	124818	-	4	NUT .. 1/4-20 hex.
23	113176	2	-	PLUG .. Pipe - 1/2 M. P. T. square hd. - Brass
24	143980	-	3	PLUG .. Pipe - 3/8 M. P. T. square hd. - Steel
25	143981	-	2	PLUG .. Pipe - 1/2 M. P. T. square hd. - Steel
26	8260541	3	-	ROD .. Protector

P. L. No. A780

FUEL OIL HEAT EXCHANGER

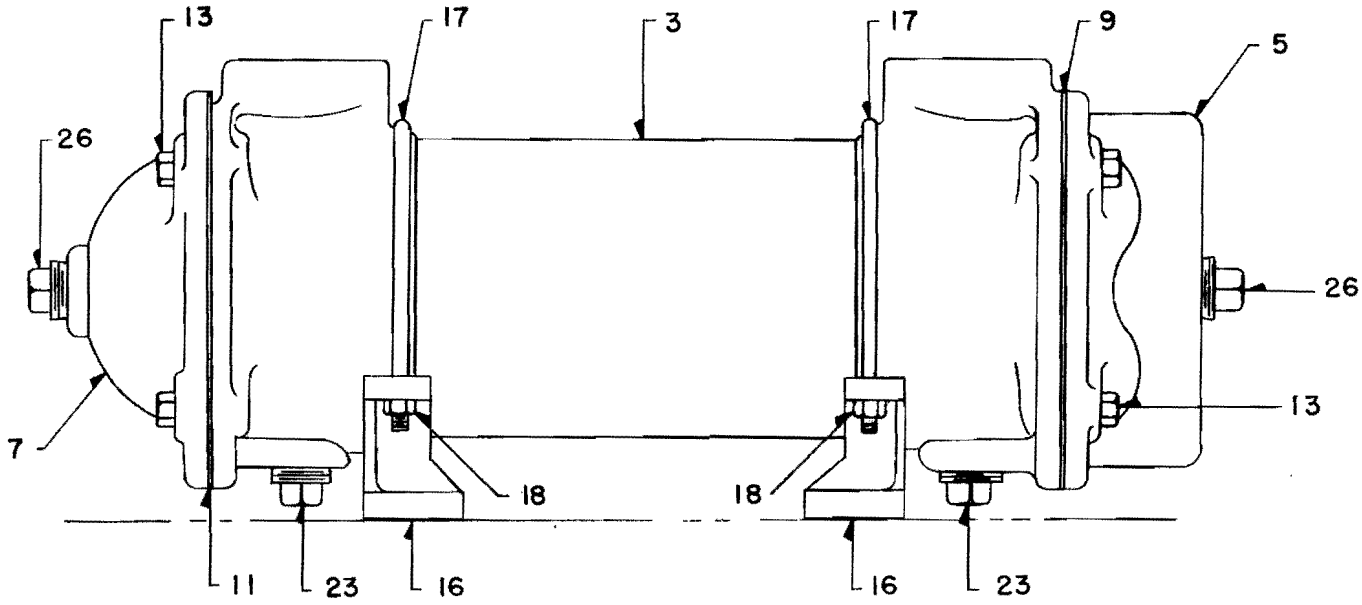

Ref. No. 1

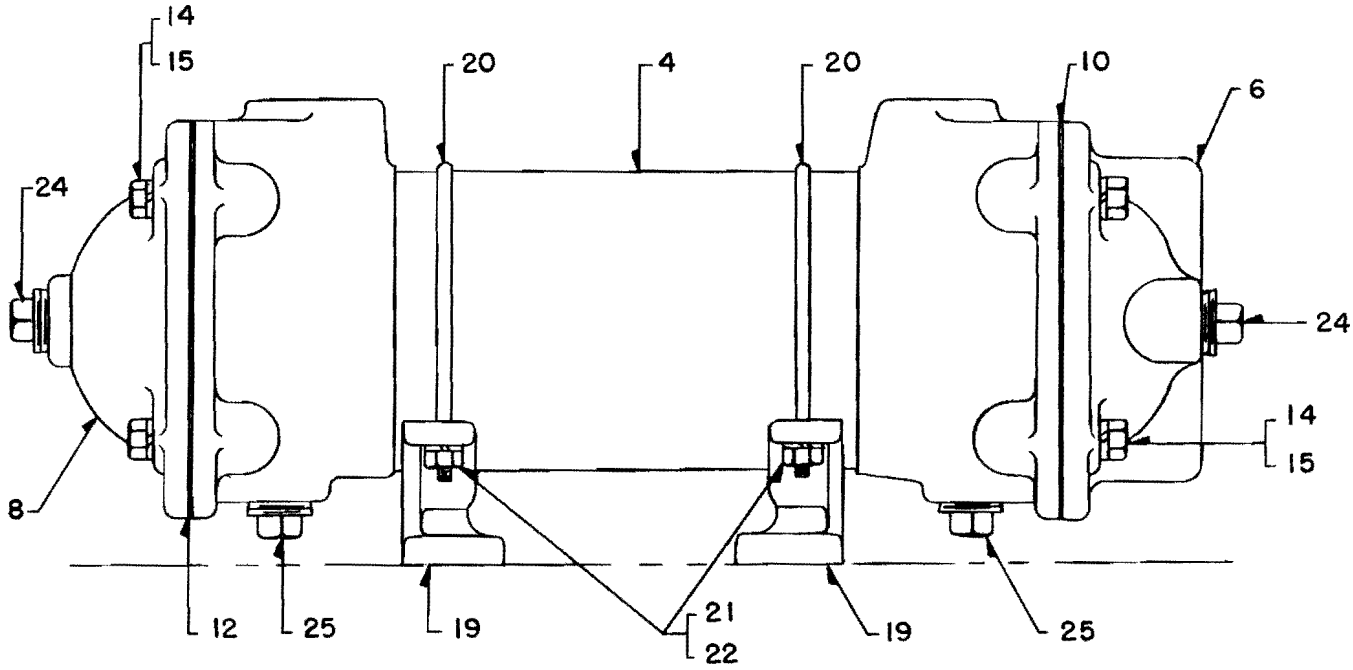

Ref. No. 2

PLATE A780-2

Parts List No. C900

LUBE OIL PIPING

F2, F3, F7, FP7, F9, FP9 LOCOMOTIVES

PLATE C900-1

Ref. No.	Part Number	No. Req.	Description
1	8090027	1	FILTER .. Lube oil - See P.L. 926
2	8072568	1	HOSE .. Flexible metal - 4 inch
3	8058494	1	HOSE .. Flexible metal - 3 inch
* 4	8080961	1	ELBOW .. Oil cooler to lube oil filter
5	8071587	2	GASKET .. Flange - 4 inch flexibl3 metal hose
6	179889	12	BOLT .. 1/2-13 x 2 hex. hd. - Replaces 173836
7	103323	28	WASHER .. Lock - 1/2
8	102637	12	NUT .. 1/2-13 hex. - Replaces 173685
9	179884	8	BOLT .. Flexible hose to oil return - 1/2-13 x 1-3/8 hex. hd. Replaces 173826
10	8080941	1	ELBOW .. Oil return
11	8080947	1	GASKET .. Flange - Oil return elbow to strainer case
12	181432	4	BOLT .. Oil return elbow to strainer case - 1/2-20 x 1-5/8 hex. hd. Replaces 176079
13	8126649	2	GASKET .. Flange - 3 inch flexible hose - Replaces 8038897
14	8090082	1	ELBOW .. Scavenging pump
15	8029467	2	GASKET .. Flange - Scavenging pump
16	113176	1	PLUG .. Pipe - 1/2-14 P.T.
17	179897	4	BOLT .. Scavenging pump elbow - 1/4-13 x 4 hex. hd. Replaces 173865
18	118539	4	NUT .. Flared tube - 3/8
19	8116856	A.R.	TUBING .. Copper - 3/8x 25 ft. - Replaces 8023251
20	118537	4	NUT .. Flared tube - 1/4
21	8116511	A.R.	TUBING .. Copper - 1/4 x 50 ft. - Replaces 8023249
22	118800	1	UNION .. Flared tube - 1/2
23	116453	1	ELBOW .. Flared tube - 1/4 x 1/4 M.P.T.
24	8061466	1	NIPPLE .. Short pipe - 1/4 P.T. x 1-1/2 in. lg.
25	118576	1	ELBOW .. Flared tube - 3/8 tube x 1/4 F.P.T.
26	8027428	1	CONNECTOR .. Flared tube - 1/2 tube x 1/2 M.P.T.
27	8083498	1	NIPPLE .. Close pipe - 1 P.T. x 1-1/2 in. lg.
28	179553	1	ELBOW .. Reducing - 1 P.T. x 1/2 P.T.
29	8116730	A.R.	TUBING .. Copper - 1/2 x 50 ft. - Replaces 8023252
*30	8027437	1	ELBOW .. Flared tube - 1/2 tube x 1/2 M.P.T.
31	8116747	A.R.	PIPE .. 1-1/2 inch x 20 ft. - Replaces 8077993
32	8062563	1	ELBOW .. Union - 1-1/2 - 90°
33	8060977	2	NIPPLE .. Short pipe - 1-1/2 P.T. x 2-9/16 in. lg.
34	106643	1	PLUG .. Pipe - 1-1/2 P.T.
35	8042829	1	ELBOW .. Pipe - 1-1/2 - 90°
36	118541	2	NUT .. Flared tube - 1/2
*37	179885	8	BOLT .. 1/2-13 x 1-1/2 hex. hd.
*38	118810	1	UNION .. Tube - 1/4

NOTE: Ref. No. 39-46 apply only to engines equipped with 8084671 oil strainer requiring an external drain. Oil strainer 8186776 incorporates an internal drain in the design of the strainer eliminating the necessity of external drain piping.

39	219347	1	NIPPLE .. Pipe - 3/4 x 10 in. lg.
40	8061808	1	VALVE .. Union globe - 3/4
41	8116747	A.R.	PIPE .. 3/4 inch x 20 ft. - Replaces 8077993
42	8042826	4	ELBOW .. Pipe - 3/4
43	219341	1	NIPPLE .. Pipe - 3/4 x 3-1/2 in. lg.
44	111661	1	COUPLING .. Pipe - 3/4
45	103869	1	PLUG .. Pipe - 3/4-14 P.T.
46	8096249	1	VALVE .. Globe - 1-1/2 P.T.

P. L. No. C900

LUBE OIL PIPING

Ref. No.	Part Number	No. Req.	Description
			AIR BOX DRAIN PIPING
NOTE: Ref. No. 47-57 apply to F7, FP7, F9, FP9 locomotives.			
47	8178307	2	COCK .. Cut-out - 1/2
48	8081567	2	GASKET
49	8034030	4	GASKET
50	8196675	1	TUBE ASY. .. Air box drain - Left side
*51	8196676	1	TUBE ASY. .. Air box drain - Right side
52	181361	4	BOLT .. 3/8-24 x 7/8 hex. hd.
53	181444	4	BOLT .. 1/2-20 x 3-1/2 hex. hd.
54	103321	4	WASHER .. Lock - 3/8
55	103323	4	WASHER .. Lock - 1/2
56	8062374	2	ELBOW .. Solder - 1/2
57	8116854	A.R.	TUBING .. Copper - 1/2 I.P.S. x 20 ft.
			PARTS REQUIRED WHEN NOT USING ELECTRO-HYDRAULIC GOVERNOR
58	8082941	1	SWITCH .. Vacuum - Lube oil suction alarm - See P.L. 5503
59	8074612	1	SWITCH .. Pressure control - Lube oil pump - See P.L. 5505
60	8040347	1	ELBOW .. Flared tube - 1/4 tube x 1/4 F.P.T.
61	8052441	2	TEE .. Pipe - 1/4 P.T.
62	118750	2	CONNECTOR .. Flared tube - 3/8 tube x 1/4 P.T.

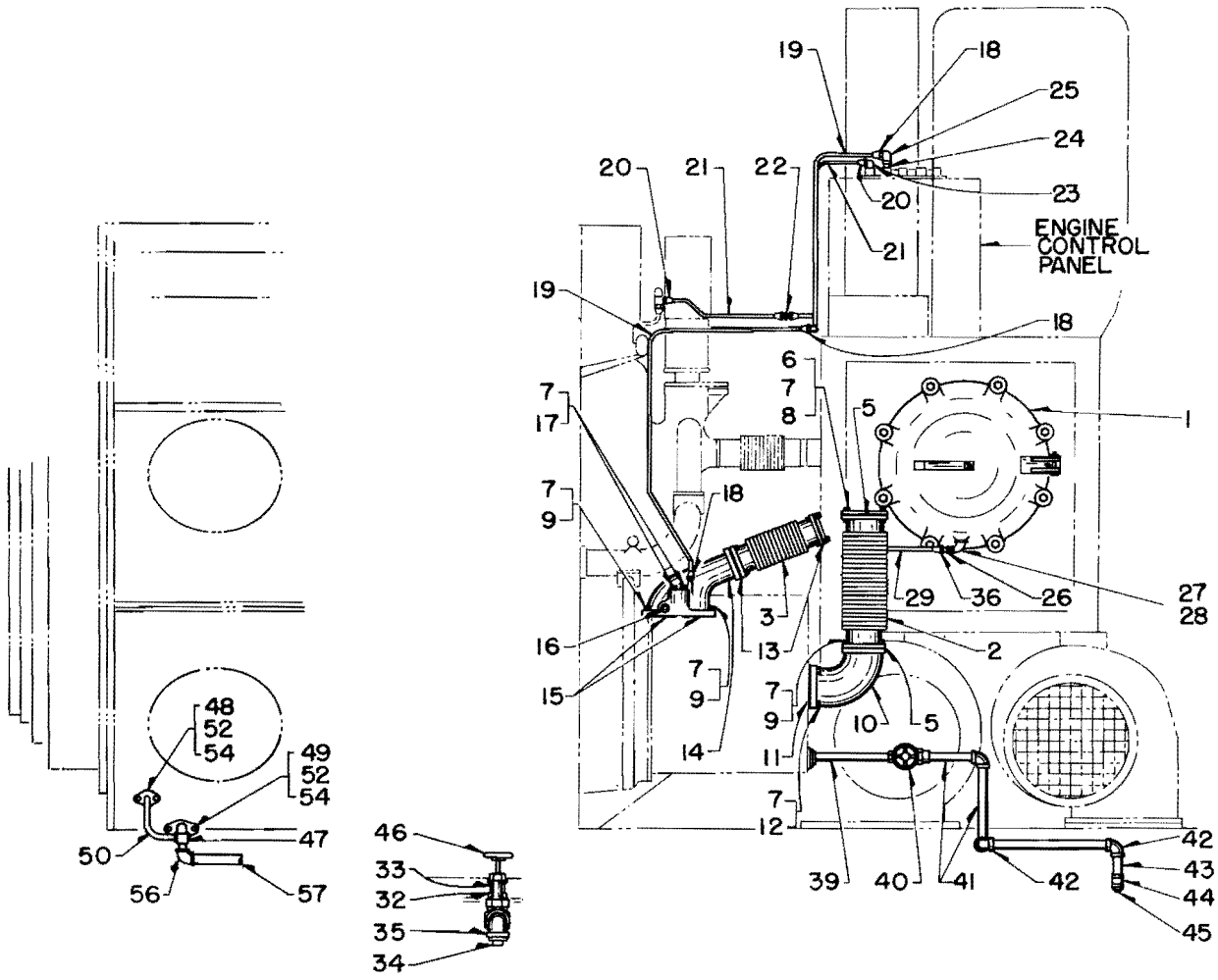

PLATE C900-1

Parts List No. C905

LUBE OIL SYSTEM

E7 LOCOMOTIVE

PLATE B905-1 and 2

Ref. No.	Part Number	No. Req.	Description
1	216344	1	NIPPLE .. 1-1/2 P. T. x 6 in. lg.
2	8022447	2	FITTING .. Scavenging pump outlet
3	8022448	2	GASKET .. Scavenging pump outlet fitting
4	8020816	18	FLANGE .. 2 in.
5	8015648	20	GASKET .. 2 in. flange
6	8004075	2	VENT .. 1 in. female - Lube oil tank
7	8062398	5	ELBOW .. 2 in. solder - 90°
8	8022451	4	FLANGE .. 2 in.
9	8064336	1	VALVE .. Angle - 1 P. T.
10	8060975	3	NIPPLE .. Pipe - 1 P. T. short
11	113957	6	SCREW .. Machine - 1/4-20 x 3/4 rd. hd.
12	186477	1	ELBOW .. Reducing - 1-1/2 P. T. x 1 P. T.
13	8077253	1	UNION .. 1/2 P. T.
14	179892	8	BOLT .. 1/2-13 x 2-3/4 hex. hd. - Replaces 173844
15	113176	2	PLUG .. Pipe - 1/2 P. T. - Square hd. - Brass
16	8029150	2	GASKET .. Intake elbow
17	8064131	4	ELBOW .. Flanged - 3 in.
18	8041732	4	GASKET .. Flange - 3 in.
19	8062400	2	ELBOW .. 3 in. solder - 90°
*20	179889	8	BOLT .. 1/2-13 x 2 in. heavy hex. hd. - Replaces 173836
21	8051228	2	FLANGE .. Sump - 3 in.
22	8028758	2	GASKET .. Flange - 3 in.
*23	8035929	4	PLATE .. Cover - Front of oil cooler
*24	8109820	1	NIPPLE .. 1 P. T. x 2-1/2 in. lg. - Brass
*25	8032593	2	GASKET .. Ring
*26	179887	8	BOLT .. 1/2-13 x 1-3/4 hex. hd. - Replaces 173829
27	8084001	2	MANIFOLD
28	8038897	4	GASKET
29	8038896	6	FLANGE .. 3 in.
*30	8062395	1	ELBOW .. 1 P. T. 90°
31	179895	4	BOLT .. 1/2-13 x 3-1/2 heavy hex. hd. - Replaces 173862
32	8064210	2	DUCT ASSEMBLY .. Tube
33	8108296	2	CLAMP ASSEMBLY .. Tube
34	103323	184	WASHER .. Lock - 1/2
*35	8045939	1	ELBOW .. Union - 1 P. T. - 90°
36	8029151	2	GASKET .. Piston cooling elbow to pump
37	128137	1	COUPLING .. 1 P. T.
38	114501	6	NUT .. 1/4-20 hex. - Replaces 123390
39	103319	6	WASHER .. Lock - 1/4
40	451411	4	NUT .. 5/8-11 hex. - Replaces 173687
41	119100	6	ELBOW .. 1 P. T. - 90°
*42	8105873	A. R.	TAPE .. Insulating - 3/16 x 1-9/16 x 50 ft. - 50 ft. required
43	8116511	A. R.	TUBING .. 1/4 O. D. copper - 50 ft. - 7 ft. required
44	8059055	3	VALVE .. Gate - 1 P. T.
45	118537	4	NUT .. 1/4 tube
46	8040325	2	CONNECTOR .. 1/4 tube x 1/4 P. T.
47	8040347	2	ELBOW .. 1/4 tube x 1/4 P. T.
48	8032123	2	GAUGE .. Lube oil pressure - 0-100 lbs. - See P. L. 935
49	271562	8	BOLT .. 5/8-11 x 2 hex. hd. - Replaces 173957

P. L. No. C905

LUBE OIL SYSTEM

Ref. No.	Part Number	No. Req.	Description
50	103323	8	WASHER .. Lock - 5/8
51	103345	8	WASHER .. Plain - 5/8
52	113177	4	PLUG .. Pipe - 3/4 P. T. sq. hd. - Brass
53	8064129	2	ELBOW .. Flanged 2 in.
54	8064132	2	GASKET .. Flanged elbow
55	103870	4	PLUG .. Pipe - 1 P. T. - Square hd.
56	8022449	2	FLANGE .. 1 in.
57	8022450	2	GASKET .. Flange - 1 in.
58	8116872	A. R.	PIPE .. 1 in. std. brass - 12 ft. - 2 ft. required
59	8116937	A. R.	PIPE .. 1 in. std. steel - Approx. 20 ft. - 15 ft. required
60	103321	8	WASHER .. Lock - 3/8
61	179839	8	BOLT .. 3/8-16 x 1 hex. hd. - Replaces 100134
62	8122502	A. R.	TUBING .. 2 in. I. P. S. copper - 20 ft. - 60 ft. required
63	8049150	A. R.	TUBING .. 3 in. I. P. S. copper - Sold by the foot - Repl. 8122574 - 20 ft. req.
64	180173	16	BOLT .. 1/2-13 x 1 hex. hd. - Replaces 178100 and 173819
65	179897	8	BOLT .. 1/2-13 x 4 hex. hd. - Replaces 73865
66	8061466	2	NIPPLE .. Short - 1/4 P. T.
67	102637	56	NUT .. 1/2-13 hex. - Replaces 173685 and 429608
68	179890	32	BOLT .. 1/2-13 x 2-1/4 hex. hd. - Replaces 173837
*69	179889	16	BOLT .. 1/2-13 x 2 hex. hd. - Replaces 173836
70	179885	56	BOLT .. 1/2-13 x 1-1/2 hex. hd. - Replaces 173827
71	179883	20	BOLT .. 1/2-13 x 1-1/4 hex. hd. - Replaces 173825
72	8045220	1	ELBOW .. Union - 1 P. T. - 90° - Replaces 187404
73	8108640	1	PIPE .. 1 P. T. x 20-1/2 in. lg.
74	8105686	1	PIPE .. 1 P. T. x 37-1/2 in. lg.
75	8080329	1	NIPPLE .. 1 P. T. - 3 in. lg.
76	8108127	1	CLAMP .. Pipe
77	8108215	1	CLAMP .. Pipe
78	187562	2	BUSHING .. Face - 1-1/2 in. x 1 in.
79	8060954	1	NIPPLE .. Close - 1 P. T.
80	8038892	2	FLASHING .. 2 in. pipe
81	8062429	2	ELBOW .. 2 in. solder - 45°
82	8062430	1	ELBOW .. 3 in. solder - 45°
83	8062490	2	ELBOW .. 2 in. solder
84	8072582	2	ELBOW .. 2 in. solder - 45°
85	8068788	2	TANK .. Lube oil - See P. L. 925
86	119096	1	ELBOW .. 1 P. T. - 45°
87	179886	16	BOLT .. 1/2-13 x 1-5/8 hex. hd. - Replaces 173828
88	179731	1	ELBOW .. 1 P. T. - 90° - Brass
89	179886	16	BOLT .. 1/2-13 x 1-5/8 hex. hd. - Replaces 173828
90	8035970	1	COOLER .. Lube oil - See P. L. 927

P. L. No. C905

LUBE OIL SYSTEM

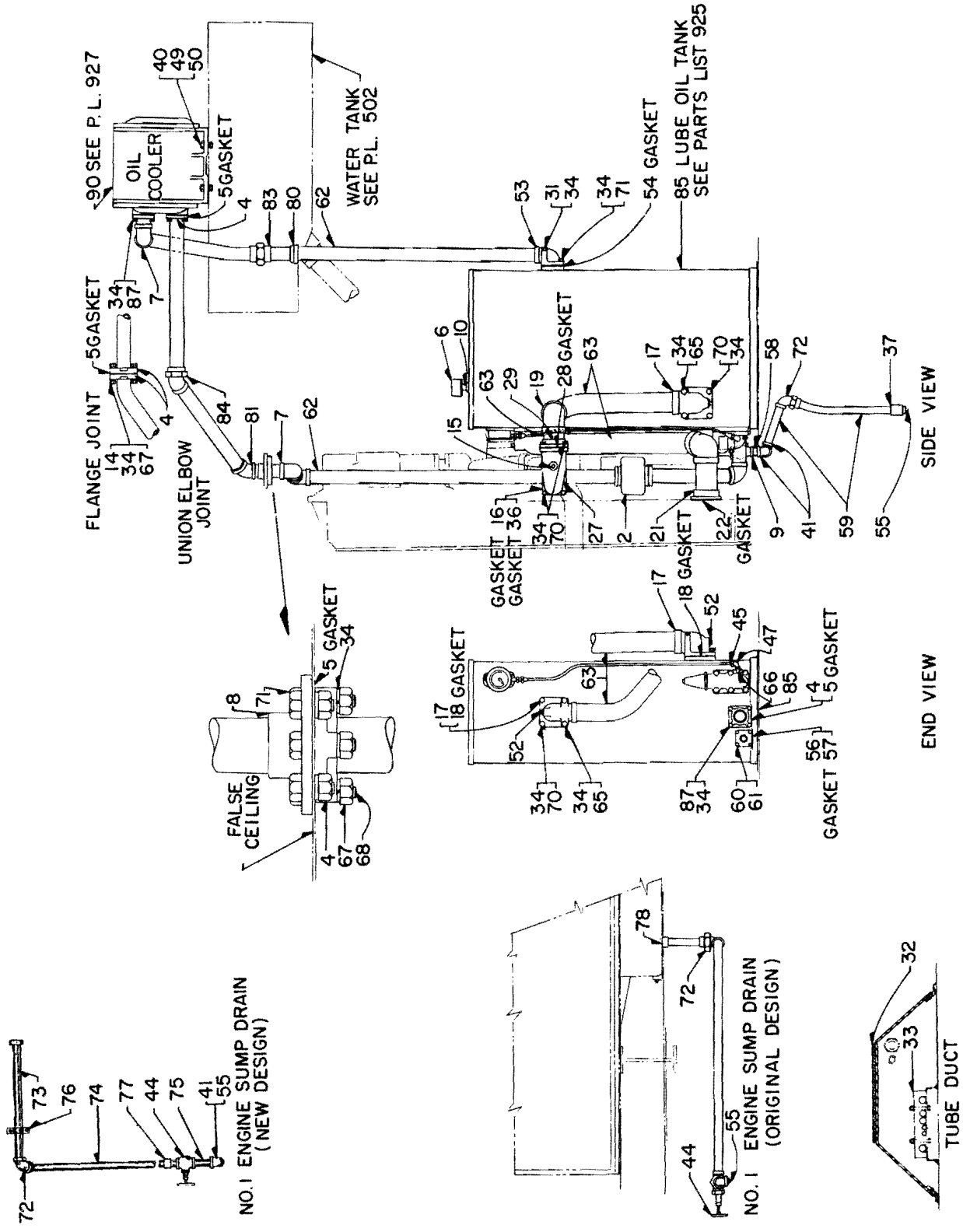

NO. 1 ENGINE

PLATE B905-1

P. L. No. C905

LUBE OIL SYSTEM

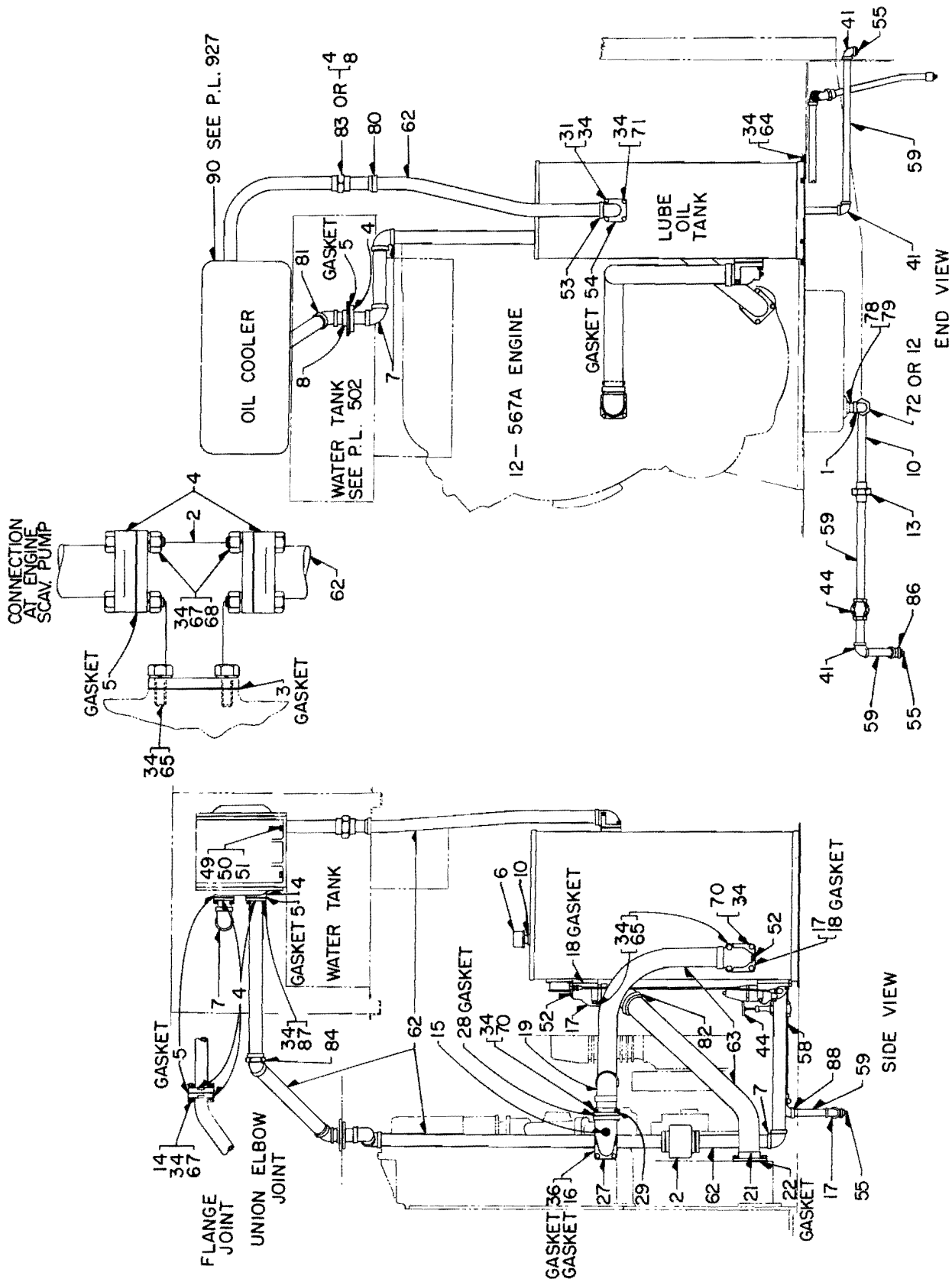

NO. 2 ENGINE

PLATE B905-1

P. L. No. C905

LUBE OIL SYSTEM

AIR BOX DRAIN AND TANK

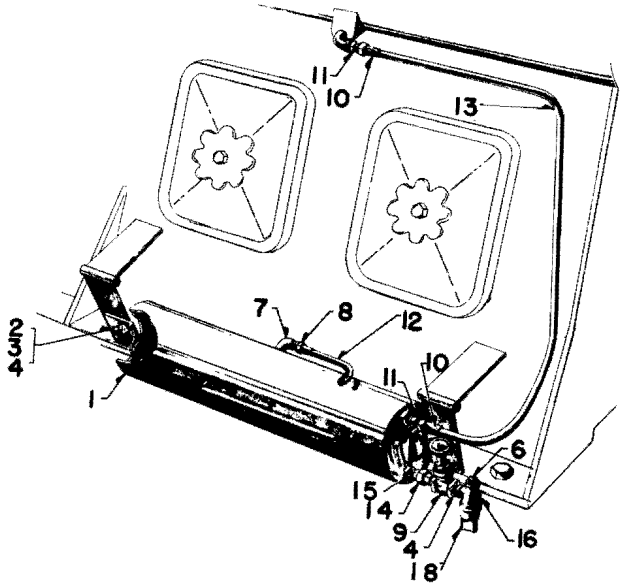

PLATE C905-3

Ref. No.	Part Number	No. Req.	Description
TANK . . Air Box Drain			
1	8055594	4	TANK . . Air box drain
2	179883	8	BOLT . . Tank mounting - Replaces 173825
3	103323	8	WASHER . . Lock - 1/2
4	102637	8	NUT . . 1/2-13 hex. - Replaces 173685 and 429608
AIR BOX DRAIN TANK PIPING			
* 5	119100	8	ELBOW . . 1 P. T. - 90° - Tank drain
6	103868	4	PLUT . . Pipe - 1/2 P. T. - Square hd.
7	118755	4	ELBOW . . 3/8 tube - 1/4 P. T.
8	118539	4	NUT . . 3/8 tube
9	8055291	4	VALVE . . Gate - 1/2 P. T.
10	118541	8	NUT . . 1/2 tube
11	8027428	8	CONNECTOR . . 1/2 tube x 1/2 P. T.
12	8116856	A. R.	TUBING . . 3/8 in. copper - 25 ft. - 4 ft. required
13	8116730	A. R.	TUBING . . 1/2 in. copper - 50 ft. - 16 ft. required
14	8044160	4	UNION . . 1/2 M. P. T. - Replaces 187368
15	8060963	4	NIPPLE . . Close - 1/2 P. T.
16	187720	4	TEE . . Reducing - 1 P. T. x 1/2 P. T. x 1/2 P. T.
*17	103866	4	PLUG . . Pipe - 1/4 P. T. - Square hd.
18	8116937	A. R.	PIPE . . 1 in. std. steel. - Approx. 20 ft. - 16 ft. required
*19	8095871	2	NIPPLE . . 1/2 P. T. x 6 in. lg.
*20	8088722	2	NIPPLE . . 1/2 P. T. x 2 in. lg.

P. L. No. C905

LUBE OIL SYSTEM

LOW OIL PRESSURE AND LUBE OIL SUCTION ALARM SWITCHES

Ref. No.	Part Number	No. Req.	Description
LOW OIL PRESSURE SWITCH APPLICATION			
1	8074612	1	SWITCH .. Engine low oil pressure alarm - See P. L. 5507
2	105417	2	TEE .. 1/4 P. T.
3	116453	1	ELBOW .. 1/4 tube x 1/4 P. T.
4	118537	2	NUT .. 1/4 tube
5	8094870	1	BRACKET .. Switch mounting
6	8116511	A. R.	TUBING .. 1/4 in. copper - 50 ft. - 10 ft. required
7	8064116	3	CLAMP .. Pipe - 1/4 in.
8	8087071	1	CLAMP .. 1/4 in.
9	132830	4	SCREW .. 10-24 x 3/8 rd. hd.
10	179789	3	BOLT .. 1/4-20 x 3/8 hex. hd. - Replaces 106962
*11	120217	4	WASHER .. Lock - No. 10
12	103319	3	WASHER .. Lock - 1/4
13	120361	4	NUT .. 10-24 hex.
14	116536	1	CONNECTOR .. 1/4 tube x 1/4 P. T.
15	8088469	3	PAD .. Tapping
16	103878	1	PLUG .. Pipe - 1/4P. D. - Square hd. - Replaces 103866
*17	8077101	A. R.	TAPE .. Friction - 3/4 in. wide - 82-1/2 ft. per roll
LUBE OIL SUCTION SWITCH APPLICATION			
18	8082941	1	SWITCH .. Engine lube oil suction alarm - See P. L. 5507
19	8085906	1	BRACKET .. Switch
20	118755	1	ELBOW .. 3/8 tube x 1/4 P. T.
21	116524	1	BUSHING .. Reducing - 1/2 P. T. x 1/4 P. T.
22	118539	2	NUT :. 3/8 tube
23	118750	1	CONNECTOR .. 3/8 tube x 1/4 P. T.
24	103878	1	PLUG .. Pipe - 1/4 P. T. - Square hd. - Replaces 103866
25	8116856	A. R.	TUBING .. 3/8 in. copper - 25 ft. - 7 ft. required
26	8038643	1	BUSHING .. Insulating - 1/2 M. P. T.

P. L. No. C905

LUBE OIL SYSTEM

LOW OIL PRESSURE AND LUBE OIL SUCTION ALARM SWITCHES

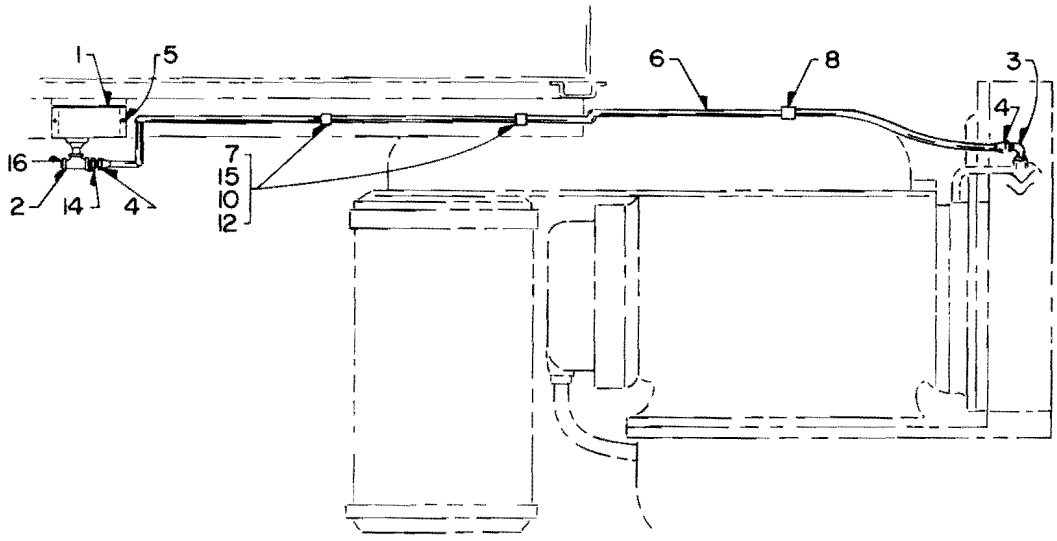

PRESSURE SWITCH APPLICATION

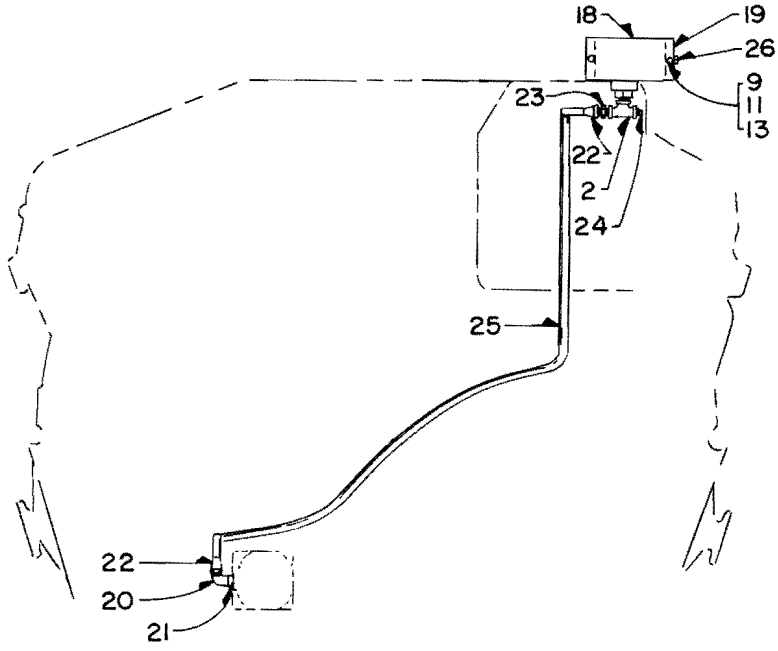

SUCTION SWITCH APPLICATION

PLATE B905-4

Parts List No. B910

LUBE OIL SYSTEM

GP7, GP9 LOCOMOTIVES

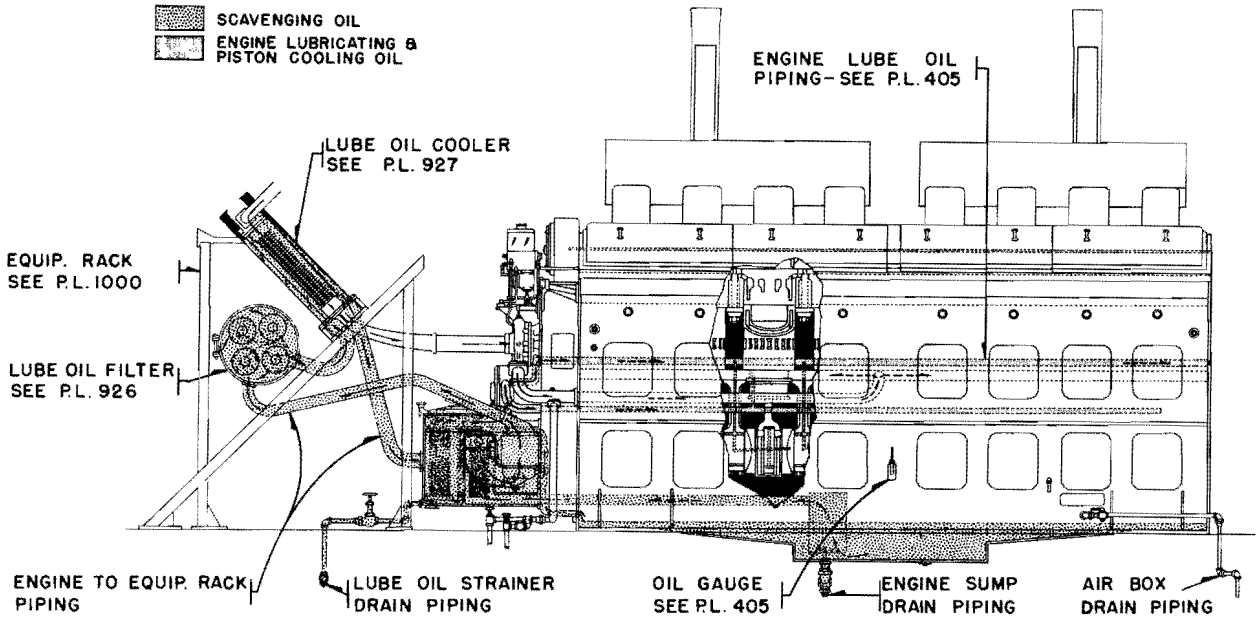

LUBE OIL PIPING ARRANGEMENT

PLATE A910-1

NOTE: Reference numbers are not illustrated on above lube oil piping arrangement plate.

Ref. No.	Part Number	No. Req.	Description
			ENGINE TO EQUIPMENT RACK PIPING
1	8154957	1	RACK .. Equipment - See P. L. 1000
2	8142823	1	FILTER .. Lube oil - See P. L. 926
3	8080381	1	COOLER .. Lube oil - See P. L. 927
4	8029467	1	GASKET .. Scavenging pump to elbow
5	8090082	1	ELBOW .. Scavenging oil pump
6	173827	4	BOLT .. Elbow to scavenging pump - 1/2-13 x 1-1/2 hex. head
7	179897	4	BOLT .. Elbow to scavenging pump - 1/2-13 x 4 hex. head - Replaces 100166
8	103323	36	WASHER .. Lock - 1/2
9	8126649	4	GASKET .. Lube oil filter pipe and cooler oil line
10	8143546	1	PIPE .. Lube oil filter
11	173836	4	BOLT .. Elbow to pipe - 1/2-13 x 2 hex. head
12	429608	4	NUT .. Elbow to pipe - 1/2-13 hex.
13	173825	4	BOLT .. Pipe to filter - 1/2-13 x 1-1/4 hex. head
14	8038896	2	FLANGE .. Lube oil cooler to filter line
15	8062400	2	ELBOW .. Solder - Oil cooler to filter line
16	- - - -	A R	TUBING .. Copper - 3 I.P.S. - Available 12 ft. - 8116865
17	173826	4	BOLT .. Flange to filter - 1/2-13 x 1-3/8 hex. head
18	173827	4	BOLT .. Flange to cooler - 1/2-13 x 1-1/2 hex. head
19	8080947	2	GASKET .. Oil cooler to return elbow and oil strainer to elbow
20	8142500	1	ELBOW .. Oil cooler return
21	8072568	1	HOSE .. Flexible metal - Oil return
22	8071587	2	GASKET .. Flexible metal hose
23	8080941	1	ELBOW .. Oil strainer oil return
24	173827	8	BOLT .. Flexible metal hose - 1/2-13 x 1-1/2 hex. head
25	176079	4	BOLT .. Elbow to oil strainer - 1/2-20 x 1-5/8 hex. head

8196888 8158866

P. L. No. B910

LUBE OIL SYSTEM

Ref. No.	Part Number	No. Req.	Description
26	- - - -	A R	TUBING .. Copper - 3/8 O.D. - Lube oil cooler to engine vent in overspeed trip housing - Available 25 ft. - 8116856
27	8160967	1	CLAMP .. Pipe - Overspeed trip housing
28	116488	2	NUT .. Flared tube - 5/8
29	109429	1	ELBOW .. Flared tube - 5/8 tube x 1/2 P.T.
30	8156588	1	FLANGE .. Overspeed trip housing
31	8058257	1	GASKET .. Flange - Overspeed trip housing
32	106275	2	BOLT .. Flange to housing - 1/4-28 x 7/8 hex. head
33	103319	2	WASHER .. Lock - 1/4
34	116487	1	CONNECTOR .. Flared tube - 5/8 tube x 1/2 F.P.T.
35	179536	1	ELBOW .. Reducing pipe - 1/2 x 1 P.T.
36	- - - -	A R	TUBING .. Copper - 1/2 O.D. - Governor to load regulator - Available 50 ft. - 8116730
37	- - - -	A R	TUBING .. Asbestos - 1/2 I.D. - Available 160 ft. - 8122131
38	8137923	5	CLAMP .. Pipe - Governor to load regulator
39	8108197	1	CLAMP .. Pipe - Water tank bracket
40	118814	2	ELBOW .. Union - 1/2 tube
41	8040352	2	ELBOW .. Flared tube - 1/2 tube x 1/2 F.P.T.
42	219900	1	NIPPLE .. Brass pipe - 1/2 P.T. x 5 in. lg.
43	441275	1	NIPPLE .. Pipe - 1/2 P.T. x 6-1/2 in. lg.
44	- - - -	A R	TUBING .. Copper - 1/4 O.D. - Governor to lube oil pressure gauge - Available 25 ft. - 8116854
45	118537	4	NUT .. Flared tube - 1/4
46	118810	1	ELBOW .. Union - 1/4 tube
47	8108199	2	CLAMP .. Pipe - Lube oil pressure gauge line
48	8032123	1	GAUGE .. Lube oil pressure - 0-100 lb. - 3-1/2 in. dial - See P. L. 935
49	118541	2	NUT .. Flared tube - 1/2
50	118752	1	CONNECTOR .. Flared tube - 1/2 tube x 3/8 P.T.
51	8108113	3	CLAMP .. Pipe - Engine to load regulator line
52	8108207	2	CLAMP .. Pipe - Engine to load regulator line
53	118757	1	ELBOW .. Pipe - Load regulator - 1/2 x 3/8 P.T.
54	179754	1	COUPLING .. Reducing pipe - 3/8 F.P.T. x 1/8 F.P.T.
55	142851	1	NIPPLE .. Pipe - 1/8 P.T. x 2-1/2 in. lg.
56	- - - -	A R	TUBING .. Copper - 5/8 O.D. - Lube oil filter to return line - Available 50 ft. lg. - 8116729
57	116488	4	NUT .. Flared tube - 5/8
58	109429	4	ELBOW .. Flared tube - 5/8 tube x 1/2 P.T.
59	8015322	1	RESERVOIR .. Center bearing oil
60	8040313	1	CONNECTOR .. Flared tube - 3/8 tube x 3/8 P.T.
61	8108111	1	CLAMP .. Pipe - Center bearing oil line - 3/8

ENGINE SUMP DRAIN PIPING

NOTE: Ref. No. 62-65 cover piping applied to GP7 locomotives prior to October, 1953.

62	8110386	1	VALVE .. Globe - 1-1/2 P.T.
63	8062563	1	ELBOW .. Union - 1-1/2 P.T.
64	216342	1	NIPPLE .. Pipe - 1-1/2 P.T. x 5 in. lg.
65	187558	1	ELBOW .. Pipe - 1-1/2 P.T.

Ref. No.	Part Number	No. Req.	Description
			ENGINE SUMP DRAIN PIPING (continued)
66	8096250	1	VALVE .. Angle - 1-1/2 P.T.
67	8064725	1	ELBOW .. Union - 45 degree - 1-1/2 P.T.
68	107404	1	ELBOW .. Pipe - 45 degree - 1-1/2 P.T.
69	106643	1	PLUG .. Pipe - 1-1/2 P.T. square head
70	- - - -	A R	PIPE .. Steel - 1-1/2 in. - Available 20 ft. - 8116747
71	8146725	1	CLAMP .. Pipe - Engine sump drain
			ENGINE OIL STRAINER DRAIN PIPING
			NOTE: Ref. No. 73-86 apply only to engines equipped with 8084671 oil strainer requiring an external drain. Oil strainer 8186776 incorporates an internal drain in the design of the strainer eliminating the necessity of external drain piping.
72	8186776	1	STRAINER .. Oil - See P. L. 407
73	8084671	-	STRAINER .. Oil - Replaced by 8186776 - See P. L. 407
74	8166968	1	VALVE .. Globe - 3/4 solder
75	8087411	1	FLANGE .. Oil strainer drain
76	8087412	1	GASKET .. Drain flange
77	8088890	1	NIPPLE .. Short pipe - Oil strainer - 3/4 P.T. threaded one end
78	8062394	2	ELBOW .. Solder - 3/4
79	- - - -	A R	TUBING .. Copper - 3/4 - Available 20 ft. - 8133013
80	8145014	1	NIPPLE .. Pipe - 3/4 P.T. x 5-1/2 in. lg. - Threaded one end
81	8044169	1	ELBOW .. Union - 3/4 P.T.
82	431491	1	NIPPLE .. Pipe - 3/4 P.T. x 8-1/2 in. lg.
83	119099	2	ELBOW .. Pipe - 3/4 P.T.
84	- - - -	A R	PIPE .. Steel - 3/4 - Available 20 ft. - 8116936
85	103869	1	PLUG .. Pipe - 3/4 P.T. square head
86	8108348	1	CLAMP .. Pipe
			AIR BOX DRAIN PIPING
			NOTE: Ref. No. 87-94 apply to air box drain piping applied to locomotives prior to January, 1953. Ref. No. 95-105 apply to locomotives after January, 1953.
87	8058531	2	COCK .. Cut-out - 1/2 P.T.
88	8044168	2	ELBOW .. Union - 1/2 P.T.
89	119098	2	ELBOW .. Pipe - 1/2 P.T.
90	144612	2	NIPPLE .. Pipe - Air box - 1/2 P.T.
91	140807	2	NIPPLE .. Pipe - 1/2 P.T. x 3 in. lg.
92	219334	2	NIPPLE .. Pipe - 1/2 P.T. x 5-1/2 in. lg.
93	- - - -	A R	PIPE .. Steel - 1/2 - Available 20 ft. lg. - 8116751
94	8108115	2	CLAMP .. Pipe - Air box drain line
95	8178307	2	COCK .. Flanged cut-out - 1/2
96	8034030	4	GASKET .. Flanged cut-out cock
97	181444	4	BOLT .. Cut-out cock to air box
98	103323	4	WASHER .. Lock - 1/2
99	8196675	1	TUBE ASSEMBLY .. Flanged - Air box - L.S.
100	8196676	1	TUBE ASSEMBLY .. Flanged - Air box - R.S.
101	8081567	2	GASKET .. Flanged tube assembly to air box
102	181361	4	BOLT .. Flanged tube assembly to air box - 3/8-24 x 7/8 hex. head
103	103321	4	WASHER .. Lock - 3/8
104	8062374	2	ELBOW .. Solder - 1/2
105	8062402	2	ELBOW .. Pipe - 1/2 P.T. x solder

Parts List No. A911

LUBE OIL SYSTEM
E8 LOCOMOTIVE

PLATES A911-1 AND 2

Ref. No.	Part Number	No. Req.	Description
			Note: Quantities listed are requirements per unit. Illustrations show lube oil piping for No. 1 engine. No. 2 engine lube oil piping is identical except for engine sump drain - See Note of Ref. 15 Page 2.
1	8127684	2	FILTER .. Lube oil - See Parts List 926
2	8137311	2	ELBOW .. Lube oil filter
3	173864	4	BOLT .. Hex. hd.
4	173826	12	BOLT .. Hex. hd.
5	103323	56	WASHER .. Lock
6	8126649	4	GASKET .. Elbow and hose flange
7	8058494	2	HOSE .. Filter elbow to tee
8	173827	32	BOLT .. Hex. hd.
9	8137288	2	TEE .. Flanged - 3 in. - Hose to strainer to by-pass valve
10	8080947	2	GASKET .. Tee to lube oil strainer
11	8147551	2	TUBE .. Tee to by-pass valve
12	8126326	2	UNION .. 3 sol.
13	- - - -	A.R.	PIPE .. 3 in. I.P.S. - Approx. 5 in. req. - Avail. 12 ft. lg. 8116881
14	8137583	2	COUPLING .. Side outlet reducing
15	8027437	4	ELBOW .. 1/2 P.T. x 1/2 tube - Side outlet coupling
16	- - - -	A.R.	PIPE .. 2 in. I.P.S. - Approx. 4 in. req. - Avail. 12 ft. lg. 8116847
17	8137575	2	PIPE .. Cross - 2 in. sol.
18	8137543	4	GAUGE .. Oil
19	8142948	2	TEE .. Reducing - 2 x 2 x 1 sol.
20	8147550	2	NIPPLE .. 1 P.T. x 1 sol.
21	8004075	2	VENT
22	- - - -	A.R.	NIPPLE .. 2 P.T. x 2 sol. x 4-11/16 in. lg. - Avail. 12 ft. lg. 8116847
23	8137491	2	VALVE .. Lube oil by-pass
24	8061464	2	NIPPLE .. 2 P.T. x 2 sol. x 2 in. lg.
25	8045934	2	UNION .. Elbow - 2 sol.
26	- - - -	A.R.	TUBING .. 2 I.P.S. - Approx. 18 ft. req. - Avail. 20 ft. lg. 8122502
* 27	8062291	2	TEE .. 2 x 2 x 2 sol. - Relief valve, oil cooler and scavenging pump
28	8062398	2	ELBOW .. 2 sol.
29	8137212	2	ELBOW .. Scavenging pump
30	8022448	2	GASKET .. Scavenging pump elbow
* 31	- - - -	2	RACK ASSEMBLY .. See Parts List 1000
32	113176	2	PLUG .. Pipe 1/2 P.T. - Oil cooler elbow
33	8062429	2	ELBOW .. 45 ^{O} - 2 sol.
34	8137287	2	FLANGE .. Filter inlet
35	8041732	4	GASKET .. Filter inlet and outlet
36	173865	8	BOLT .. Hex. hd.
37	8108239	2	CLAMP .. Pipe
38	8084671	2	STRAINER .. Lube oil - See Parts List 405
39	- - - -	A.R.	TUBING .. 1/2 in. O.D. - Approx. 10 ft. required - Avail. 50 ft. lg. 8116730 - Lube oil filter to vent and governor to load regulator and load regulator to crankcase - See Rack Assembly Parts List 1000
40	118541	10	NUT .. Tube - 1/2 in.
41	120141	6	NUT .. Short - 1/2 in. - Load regulator to governor lube line
42	118804	6	UNION .. 1/2 in. tube - Load regulator lube line - See Rack Assembly - Parts List 1000
43	118752	2	CONNECTOR .. 3/8 P.T. x 1/2 in. tube - Load regulator to crankcase lube oil line

P. L. No. A911

LUBE OIL SYSTEM
E8 LOCOMOTIVE

Ref. No.	Part Number	No. Req.	Description
44	- - - -	A.R.	TUBING .. 3/8 in. O.D. - Approx. 12 ft. req. - Avail. 25 ft. lg. 8116856 - Lube oil suction gauge line to lube oil strainer
45	118539	4	NUT .. Tube - 3/8 in.
46	8109746	1	CLIP .. Tube
* 47	118802	2	UNION .. 3/8 in. O.D. tube - Lube oil suction gauge and strainer line - See Rack Assembly - Parts List 1000
48	- - - -	A.R.	TUBING .. 1/4 in. O.D. - Approx. 5 ft. req. - Avail. 50 ft. lg. 8116511 - Gov. to lube oil pressure gauge
49	118537	4	NUT .. Tube - 1/4 in.
* 50	118800	2	UNION .. 1/4 in. tube - Gov. to lube oil pressure gauge line - See Rack Assembly - Parts List 1000
* 51	- - - -	-	PIPING .. Engine lube oil - See Parts List 405
			LUBE OIL DRAIN
1	8087411	2	FLANGE .. Drain - 3/4 in. P.T. - See Parts List 405
2	8088890	4	NIPPLE .. 3/4 P.T. x sol. x 2 in. - Strainer and filter drain
3	8062394	2	ELBOW .. 90 ° - 3/4 sol. - Strainer drain
4	- - - -	A.R.	TUBING .. 3/4 I.P.S. - Approx. 3 ft. required - Avail. 20 ft. lg. 8133013 - Strainer and filter drain
5	8088917	4	VALVE .. Angle - 3/4 sol. - Strainer and filter drain
6	8045911	4	UNION .. 3/4 sol. x P.T. - Strainer and filter drain
7	8045930	2	ELBOW .. Union - 90 ° fem. sol. - Filter drain
8	- - - -	A.R.	PIPE .. 3/4 in. - Approx. 6 ft. required - Avail. 12 ft. lg. 8113050 - Engine filter drain
9	8095266	2	TEE .. 3/4 x 1 x 3/4 sol. - Reducing - Engine filter and strainer drain
10	- - - -	A.R.	TUBING .. 1 in. I.P.S. - Approx. 10 ft. required - Avail. 20 ft. lg. 8113301 - Eng. filter and strainer drain
11	8062404	2	ELBOW .. 1 in. sol. x P.T. - Eng. filter and strainer drain
12	103870	2	PLUG .. Pipe - 1 in. P.T. - Eng. filter and strainer drain
13	219377	4	NIPPLE .. 1-1/2 P.T. x 3 - Eng. sump drain
14	8062563	2	ELBOW .. Union - 1-1/2 N.P.T. - 90 ° - Eng. sump drain
15	- - - -	A.R.	PIPE .. 1-1/2 in. - Approx. 6-1/2 ft. required - Avail. 20 ft. lg. 8116747 - Engine sump drain
16	8096249	2	VALVE .. Globe 1-1/2 in. - Eng. sump drain
17	187558	2	ELBOW .. 1-1/2 N.P.T. 90 ° - Eng. sump drain
18	106643	2	PLUG .. Pipe 1-1/2 in. - Eng. sump drain
19	219333	4	NIPPLE .. 1/2 P.T. x 4-1/2 in. - Air box drain - Right and left side
20	119098	4	ELBOW .. 1/2 P.T. - 90 ° - Air box drain - Right and left side
21	8060973	4	NIPPLE .. Short 1/2 P.T. - Air box drain - Right and left side
22	8058531	4	COCK .. Cut-out - 1/2 P.T. - Air box drain - Right and left side
23	- - - -	A.R.	PIPE .. 1/2 in. - Approx. 32 ft. required - Avail. 20 ft. lg. 8116751 - Air box drain - Right and left side
24	8044168	4	ELBOW .. Union - 1/2 F.P.T. - Air box drain - Right and left side
25	8108115	4	CLAMP .. Pipe
26	8108196	8	CLAMP .. Pipe
27	8108221	2	CLAMP .. Pipe
28	8108133	2	CLAMP .. Pipe

Note: Engine sump drain piping of No. 1 and No. 2 engine is located on the left side of the locomotive.

P. L. No. A911

LUBE OIL SYSTEM
E8 LOCOMOTIVE

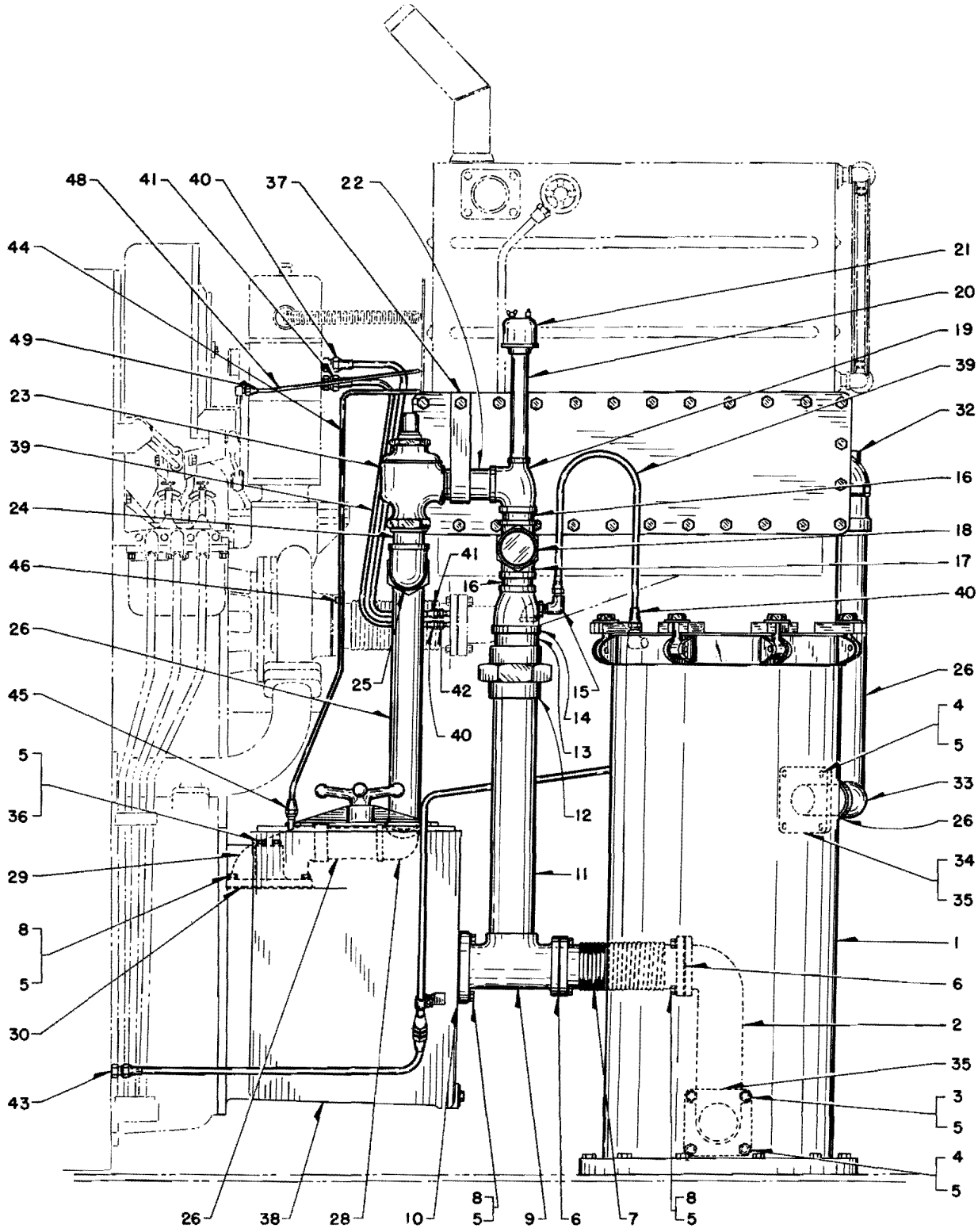

PLATE A911-1

P. L. No. A911

LUBE OIL SYSTEM
DRAIN PIPING
E8 LOCOMOTIVE

SIDE VIEW — LEFT SIDE

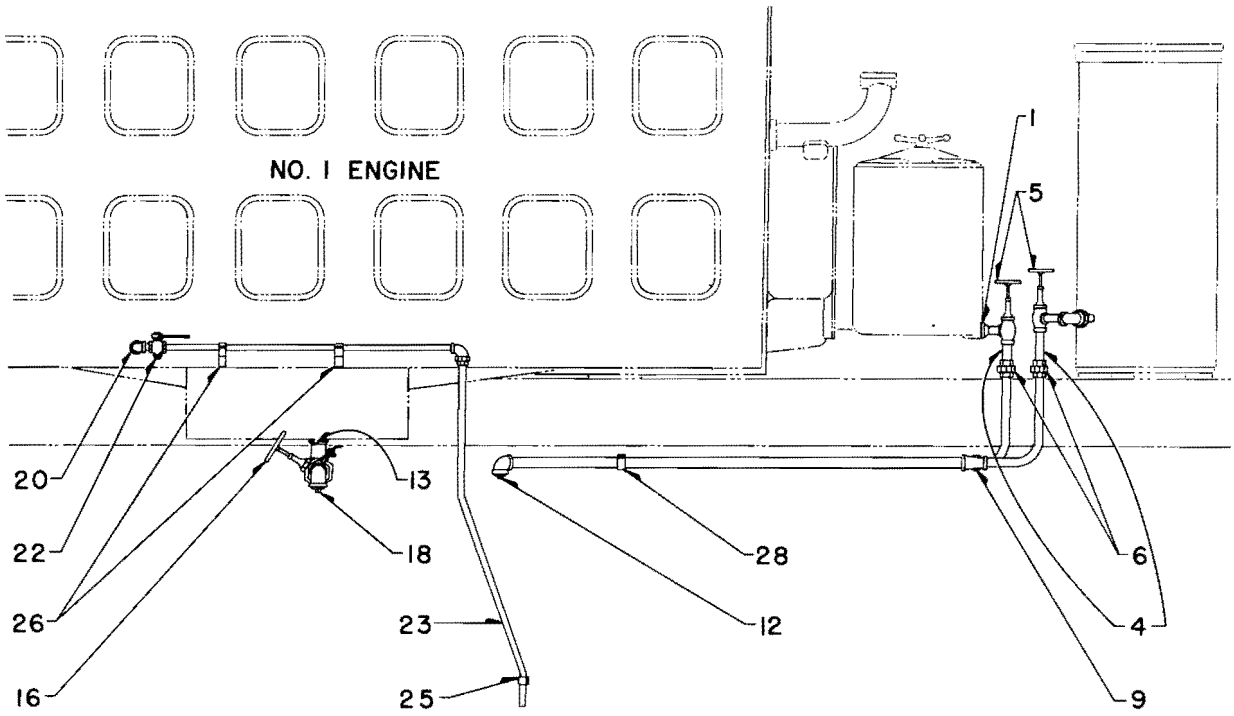

TOP VIEW — LEFT SIDE

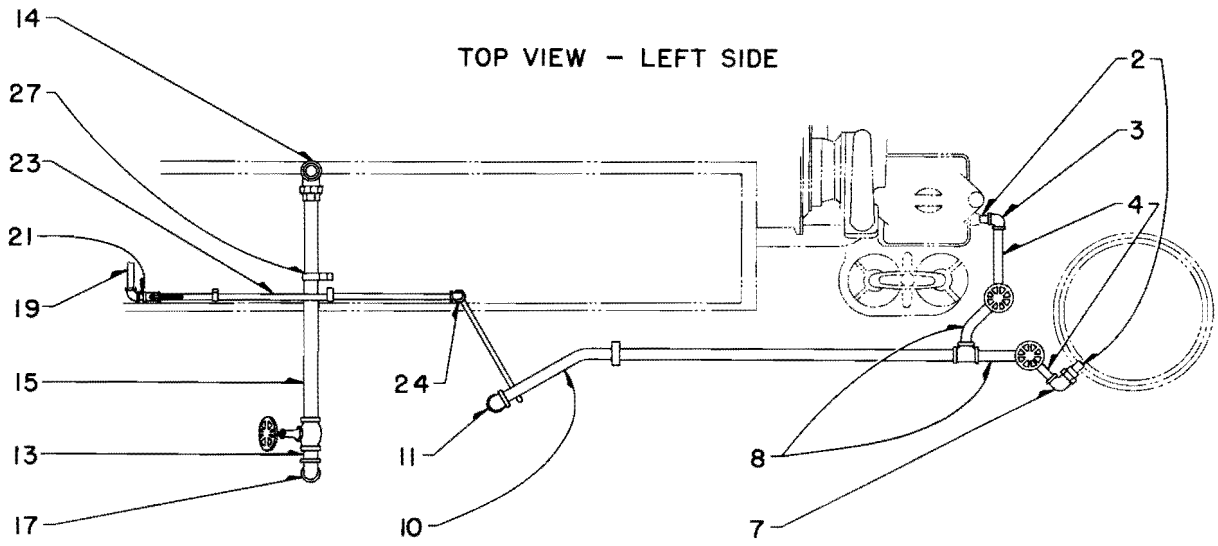

PLATE A911-2

Parts List No. A913

LUBE OIL SYSTEM

SW8 AND SW9 LOCOMOTIVE

PLATE A913-1

Ref. No.	Part Number	No. Req.	Description
			Parts listed apply to either SW8 or SW9 except where noted.
1	- - - -	-	RACK .. Equipment - See Parts List No. 1000
2	- - - -	-	PIPING .. Engine lube oil and strainer - See Parts List No. 405
2A	- - - -	-	PUMP ASSEMBLY .. Lube oil - Scavenging and piston cooling - See Parts List No. 395
3	8137460	1	COOLER .. Lube oil - See Parts List No. 927
4	8165183	1	FILTER .. Lube oil - See Parts List No. 926
5	- - - -	A.R.	PIPE .. 2 L.P.S. - Approx. 15 in. req. - Avail. 20 ft. lg. - 8122502
6	8137200	2	ELBOW .. Flanged - Lube oil cooler
7	8137287	1	FLANGE .. Pipe to filter
8	8041732	1	GASKET .. Flange to filter
9	8138872	2	GASKET .. Flange to lube oil cooler
10	103868	2	PLUG .. Pipe flanged elbow
11	173847	8	SCREW .. Cap - Hex. head - Flanged elbow - Long
12	173827	8	SCREW .. Cap - Hex. head - Flanged elbow - Short
13	103323	28	WASHER .. Lock
14	173826	6	SCREW .. Cap - Hex. head - Pipe flange and elbow to filter
15	- - - -	A.R.	TUBING .. 3 in. - Approx. 5 ft. req. - Avail. 12 ft. lg. - 8116865
16	8163969	1	ELBOW .. Tubing to lube oil filter
17	8038896	1	FLANGE .. Tubing to oil strainer tee
18	8126649	1	GASKET .. Pipe flange to oil strainer tee
19	8041732	1	GASKET .. Lube oil filter to elbow
20	8080947	1	GASKET .. Tee to strainer
21	176078	4	SCREW .. Cap - Hex. head - Tee to strainer
22	173865	2	SCREW .. Cap - Hex. head - Elbow to filter
23	8062400	1	ELBOW .. 3 in. - Solder (S x S)
24	8137288	1	TEE .. Flanged - Filter to strainer
25	8165175	1	TUBE .. Tee to union
26	- - - -	A.R.	PIPE .. 2 in. brass - Approx. 7 in. req. - Avail. 12 ft. lg. - 8116847
27	- - - -	A.R.	PIPE .. 3 in. brass - Approx. 2-1/2 in. req. - Avail. 12 ft. lg. - 8116881
28	8061464	1	NIPPLE .. Close - By-pass valve to elbow
29	8137491	1	VALVE .. Lube oil by-pass
30	8045934	1	UNION .. Elbow - 2 in. - By-pass valve
31	8126326	1	UNION .. 3 in. - Tee to reducing coupling
⁄32	8137543	2	GAUGE .. Oil sight - Complete with glass and gaskets
33	8142948	1	TEE .. Reducing - 2 x 2 x 1
34	8147550	1	NIPPLE .. Vent assembly
35	8004075	1	VENT ASSEMBLY .. Oil by-pass
36	8137583	1	COUPLING .. Side outlet reducing
37	8137575	1	PIPE .. Cross - Oil sight gauge
38	8164060	1	ELBOW .. Scavenging pump - SW8 loco. only
39	8137212	1	ELBOW .. Scavenging pump - SW9 loco. only
40	- - - -	A.R.	TUBING .. 2 in. - Approx. 5 ft. req. - Avail. 20 ft. lg. - 8122502
41	8062398	1	ELBOW .. 2 in.
*42	8062291	1	TEE .. 2 in.
*43	8108130	1	CLAMP .. Angle - Scavenger pump piping

⁄ Furnished as an assembly because of machining required during application of glass.

8164597 8166776 8161586

P. L. No. A913

LUBE OIL SYSTEM

Ref. No.	Part Number	No. Req.	Description
44	8029467	1	GASKET .. Elbow to scavenger pump
45	100166	4	SCREW .. Cap - Elbow to scavenger pump
46	- - - -	A.R.	TUBING .. Copper - 1/2 O.D. - Approx. 17 in. req. - Available 25 ft. lg. - 8116857
47	118541	2	NUT .. Flared tube
48	8061468	1	NIPPLE .. Short - 1/2 P.T. x solder
49	8040352	1	ELBOW .. 1/2 tube x 1/2 F.P.T.
50	8027428	1	CONNECTOR .. 1/2 P.T. x 1/2 tube

ENGINE SUMP DRAIN PIPING

-	- - - -	X	-	SW8 loco. and SW9 loco. prior to E4091
-	- - - -	-	X	SW9 loco. after E4091
51	8065757	1	1	VALVE .. Globe - 1 in.
52	8045220	1	1	UNION .. Elbow - 1 P.T.
53	119100	1	1	ELBOW .. 1 P.T.
54	128137	1	1	COUPLING .. 1 P.T.
55	103870	1	1	PLUG .. Pipe - 1 P.T.
56	190570	1	-	NIPPLE .. 1 P.T. x 3
57	- - - -	A.R.		PIPE .. Steel - 1 in. O.D. - Avail. 20 ft. lg. - 8116937
58	8108215	1	1	CLAMP .. Pipe - Includes hanger
*59	8108217	-	1	CLAMP .. Pipe - Includes hanger
60	119096	1	1	ELBOW .. L.P.T. x 45°
61	8060975	2	2	NIPPLE .. Short - 1 in. P.T.

AIR BOX DRAIN PIPING

NOTE: Number required column is for one drain line only. Parts are identical for either right or left hand drains.

62	8044168	1	1	ELBOW .. Union - 1/2 P.T.
63	119098	4	4	ELBOW .. 1/2 P.T.
64	- - - -	A.R.		PIPE .. Steel - 1/2 O.D. - Avail. 20 ft. lg. - 8116751
65	140537	2	-	NIPPLE .. 1/2 P.T. x 2
66	8058531	1	1	COCK .. Cut-out - 1/2 P.T.
67	8060973	2	-	NIPPLE .. Short - 1/2 P.T.
*68	219337	1	-	NIPPLE .. 1/2 P.T. x 10
*69	187249	-	1	NIPPLE .. 1/2 P.T. x 7
*70	121664	-	3	NIPPLE .. 1/2 P.T. x 2-1/2 lg.
71	8081626	2	2	CLAMP .. Pipe - Air box drain piping
72	120706	4	4	SCREW .. Cap - Hex. head - Drain pipe clamp
73	120380	4	4	WASHER .. Lock

LUBE OIL SYSTEM

Ref. No.	Part Number	No. Req.	Description
			ENGINE OIL STRAINER DRAIN
			NOTE: Oil strainer drain piping is identical on all SW8 - SW9 locomotives.
74	119099	3	ELBOW .. 3/4 P.T.
75	8108212	3	CLAMP .. Pipe
76	103869	1	PLUG .. Pipe - 3/4 P.T.
77	219344	1	NIPPLE .. 3/4 P.T. x 8
78	- - - -	A.R.	PIPE .. 3/4 steel - Approx. 55 in. req. - Avail. 20 ft. lg. - 8116936
79	8066435	1	VALVE .. 3/4 P.T. - Strainer drain pipe
80	8044155	1	UNION .. 3/4 P.T.
81	126168	1	NIPPLE .. 3/4 P.T. x 3
82	8060974	1	NIPPLE .. 3/4 P.T.

P. L. No. A913

LUBE OIL SYSTEM

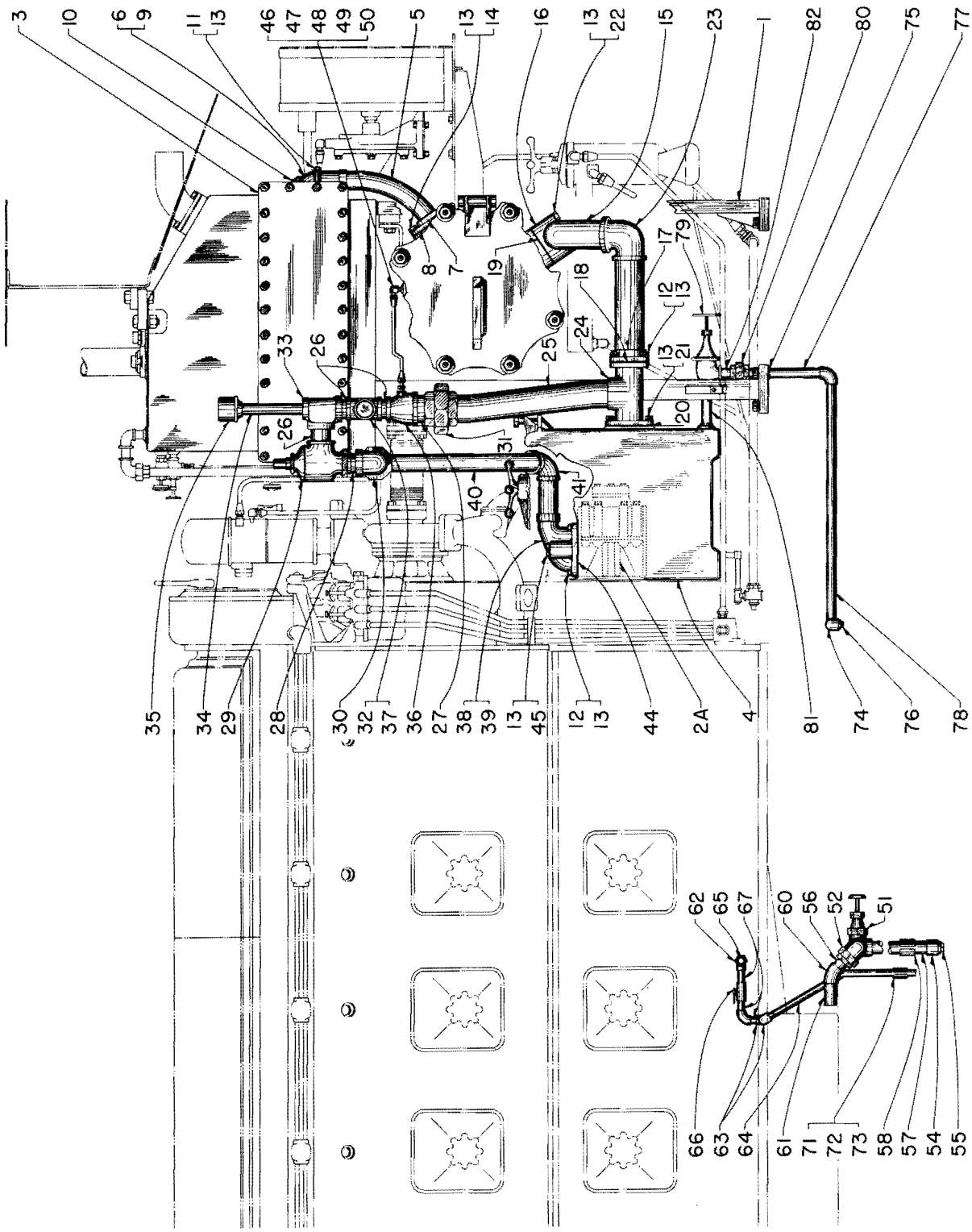

PLATE A913-1

Parts List No. C915

LUBE OIL SYSTEM

SD7, SD9 LOCOMOTIVES

PLATE B915-1

Ref. No.	Part Number	No. Req.	Description
1	8165183	1	FILTER .. Lube oil - See P. L. No. 926
2	8183064	1	COOLER .. Lube oil - See P. L. No. 927
3	8084556	1	PUMP .. Lube oil - See P. L. 395
4	8179511	1	VALVE .. Lube oil by-pass
5	8137288	1	TEE .. Flanged - 3 in.
6	8179749	1	TUBE .. Tee to coupling - Can be made from 8116865 - 3 in. dia. copper tubing
7	8153277	1	NIPPLE .. Pipe - 2-1/2 x 4 in. lg.
8	8178306	1	TEE .. 2-1/2 sol. x 3/4 P.T. x 2-1/2 sol.
9	8179513	1	CROSS .. Reducing - 2-1/2 sol. x 2 P.T.
10	8145679	A.R.	TUBING .. Copper - 2-1/2 O.D. - Avail. 20 ft. lg.
11	8187718	1	COUPLING .. Side outlet - Reducing
12	8137543	2	GAUGE .. Oil - Includes glass and gaskets
13	8179812	1	TUBE .. Flange to strainer - Can be made from 8116865 - 3 in. dia. copper tubing
14	8163969	1	ELBOW .. Flanged - 3 in.
15	8038896	1	FLANGE .. 3 in.
16	8126649	5	GASKET .. Pipe connection
17	8080947	1	GASKET .. Flanged tee to strainer
18	8029467	2	GASKET .. Elbow to strainer
19	8041732	1	GASKET .. Strainer pipe to filter
20	179897	4	BOLT .. Elbow to strainer - 1/2-13 x 4 hex. hd. - Replaces 100166
21	179884	6	BOLT .. Elbow to filter - 1/2-13 x 1-3/8 hex. hd. - Replaces 173826
22	181432	4	BOLT .. Tee to strainer - 1/2-20 x 1-5/8 hex. hd. - Replaces 176079
23	179885	10	BOLT .. Pipe flange to strainer tee - 1/2-13 x 1-1/2 hex. hd. Replaces 173827
24	179897	2	BOLT .. Elbow to filter - 1/2-13 x 1-1/2 hex. hd. - Replaces 173865
25	103323	20	WASHER .. Lock - 1/2
26	8116729	A.R.	TUBING .. Copper - 5/8 O.D. - Avail. 50 ft.
27	116488	2	NUT .. Flared tube - 5/8 tube
28	8116730	A.R.	TUBING .. Copper - 1/2 O.D. - Avail. 50 ft.
29	118541	2	NUT .. Flared tube - 5/8 tube
30	8040345	1	ELBOW .. 3/4 P.T. x 5/8 tube
* 31	8027437	1	ELBOW .. 1/2 P.T. x 1/2 tube
32	8040352	1	ELBOW .. 1/2 F.P.T. x 1/2 tube
33	8060973	1	NIPPLE .. Short - 1/2 in.
34	8179291	1	ELBOW .. Scavenging pump
* 35	8077101	A.R.	TAPE .. Friction - 3/4 in. - 82-1/2 ft. per roll
* 36	8105873	A.R.	TAPE .. Insulation - 3/16 x 1-9/16 - Avail. 50 ft.
* 37	8155243	2	CLAMP .. Open end pipe
38	113176	2	PLUG .. Pipe - 1/2 P.T.
39	8179290	1	ELBOW .. 3 flange - Cooling tank to filter
* 40	8122574	A.R.	TUBING .. Copper - 3 in. - Avail. 20 ft.
* 41	8062400	1	ELBOW .. 3 in. sol.
42	8179566	1	TUBE .. 3 in. - Elbow to filter flange
43	8182658	1	FLANGE .. 3 in. - Tube to filter
44	190270	2	BOLT .. Flange to cooler tank - 1/2-13 x 4-1/4 hex. hd. - Replaces 174772
45	8041732	2	GASKET .. Cooler to filter piping
46	179883	4	BOLT .. Flange to filter - 1/2-13 x 1-1/4 hex. hd. - Replaces 173825
47	8058257	1	GAKSET .. Flange to O.S. trip housing

8188291 8187138 8198143

P. L. No. C915

LUBE OIL SYSTEM

Ref. No.	Part Number	No. Req.	Description
48	8156588	1	FLANGE .. Tubing to O.S. trip housing
49	116487	1	CONNECTOR .. 1/2 P.T. x 5/8 tube
50	181314	2	BOLT .. Cap-flange mounting - 1/4-28 x 7/8 hex. hd. - Replaces 106275
51	103319	2	WASHER .. Lock - 1/4
52	8179737	1	TUBE ASY. .. Can be made from 8116865 - 3 in. copper tubing
* 53	8179272	1	TEE .. Flanged - Reducing
* 54	113176	1	PLUG .. Pipe - 1/2 P.T.
55	8188143	1	ELBOW .. Union pipe - 2-1/2
-	- - - -	1	RACK .. Equipment - See P. L. 1002
-	- - - -	-	PIPING .. Engine lube oil and strainer - See P. L. 405

ENGINE AND ACCESSORY RACK DRAIN PIPING

		A	-	SD7 DRAIN PIPING
		-	B	SD9 DRAIN PIPING
56	8044171	1	-	ELBOW .. Union - 2 P.T.
* 56A	189777	1	1	ELBOW .. 2 P.T.
57	8116748	1	1	PIPE .. Steel - 2 in. - Avail. 20 ft.
58	219538	1	1	NIPPLE .. Pipe - 2 P.T. x 7 in. lg.
* 59	8108196	-	2	CLAMP ASY. .. Pipe
60	8108239	1	1	CLAMP ASY. .. Pipe
61	8108238	1	-	CLAMP ASY. .. Pipe
62	8183058	2	-	PIPE .. Air box drain - Can be made from 8116511 pipe
63	144283	2	-	ELBOW .. Tube - 1/2
64	8108115	2	2	CLAMP ASY. .. Pipe
65	8108125	2	-	CLAMP ASY. .. Pipe
66	8116747	A.R.	A.R.	PIPE .. Steel - 2 in. - Avail. 20 ft.
67	187558	1	1	ELBOW .. Pipe - 1/2 P.T.
* 68	216345	1	1	NIPPLE .. Pipe - 1-1/2 x 7 in. lg.
69	8062563	1	1	ELBOW .. Pipe - Union - 1-1/2 P.T.
70	8096249	1	1	VALVE .. Globe - 1-1/2 P.T.
* 71	219378	1	1	NIPPLE .. Pipe - 1-1/2 x 3 in. lg.
* 72	187558	1	1	ELBOW .. Pipe - 1-1/2 P.T.
73	113180	1	1	PLUG .. Pipe - 1-1/2 P.T.
74	8108236	1	2	CLAMP ASY. .. Pipe
75	190700	2	-	NIPPLE .. Pipe - 1-1/2 x 4 in. lg.
76	119098	2	-	ELBOW .. Pipe - 1/2 P.T.
77	8060973	2	-	NIPPLE .. Pipe - 1/2 P.T.
78	8058531	2	-	COCK .. Cut-out - 1/2 P.T.
79	116487	2	-	CONNECTOR .. Tube - 5/8 tube x 1/2 F.P.T.
80	8116729	A.R.	-	TUBING .. Copper - 5/8 O.D. - Avail. 50 ft.
81	116488	4	-	NUT .. Tube - 5/8
* 82	8196675	1	1	TUBE ASY. .. Air box drain
* 83	8196676	1	1	TUBE ASY. .. Air box drain
* 84	8178307	2	2	COCK .. Cut-out - 1/2 P.T.
* 85	8081567	2	2	GASKET
* 86	8034030	4	4	GASKET
* 87	181361	4	4	BOLT .. 3/8-24 x 7/8 hex. hd.
* 88	181444	4	4	BOLT .. 1/2-20 x 3-1/2 hex. hd.
* 89	103321	4	4	WASHER .. Lock - 3/8
* 90	103323	4	4	WASHER .. Lock - 1/2

LUBE OIL SYSTEM

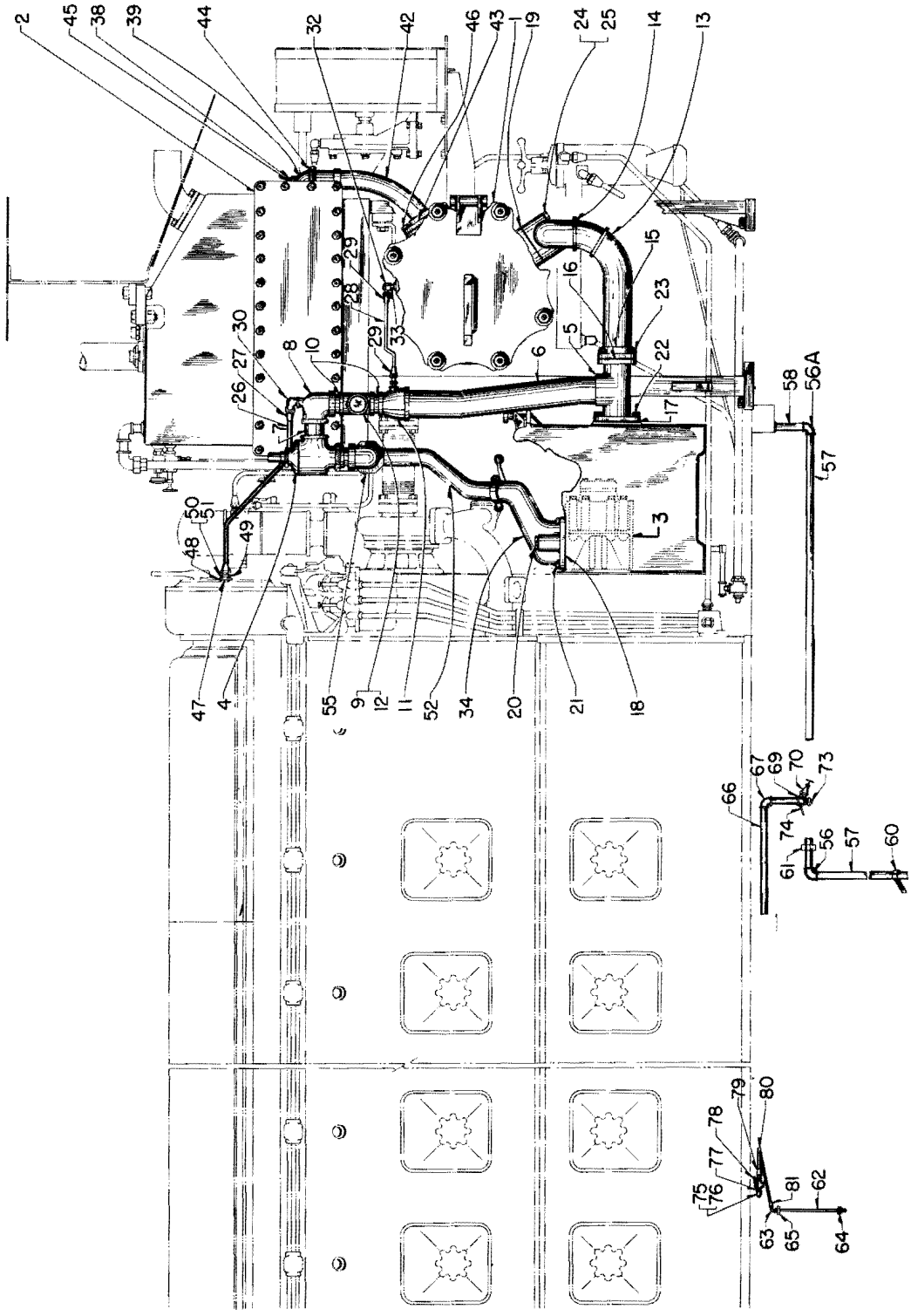

LUBE OIL PIPING ARRANGEMENT
SD7, SD9 LOCOMOTIVES

PLATE B915-1

Parts List No. A924

LUBE OIL PIPING

LUBE OIL TANK WITH EXTERNAL FILTER

600 H. P. LOCOMOTIVE

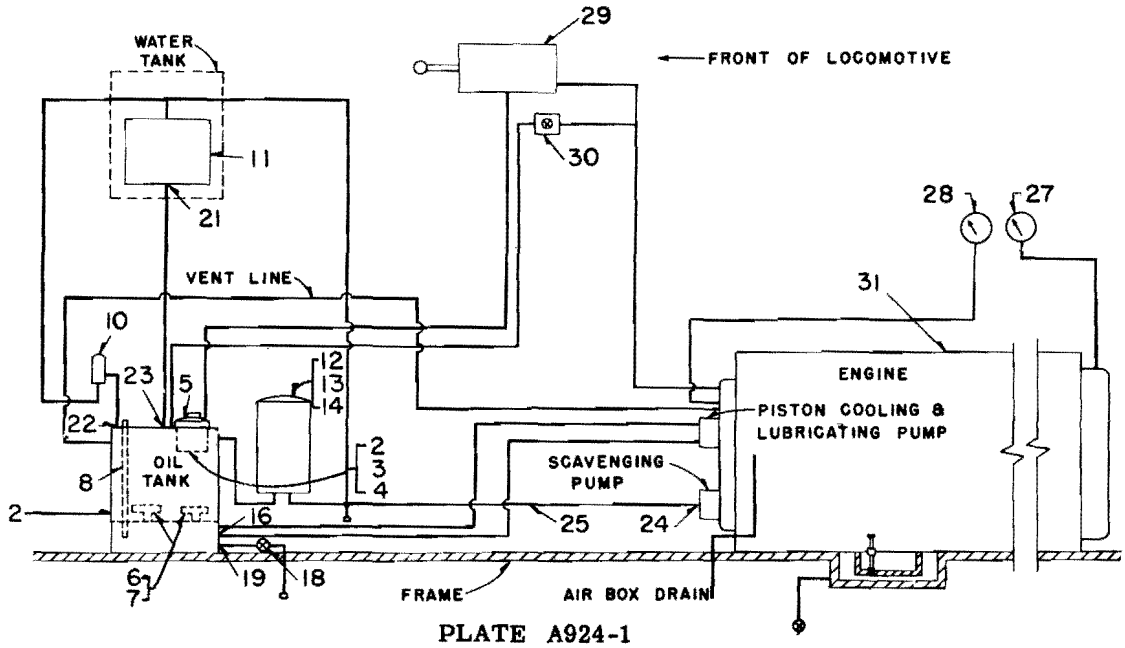

PLATE A924-1

Ref. No.	Part Number	No. Req.	Description
1	8024611	1	TANK ASSEMBLY .. Lube oil
2	8024765	1	STRAINER .. Basket - Top
3	8104776	1	SCREEN .. Bottom - 9-5/8 dia. - #40 mesh - Brass
4	8116385	1	SCREEN .. Side - 7-1/4 x 2 ft. 6-1/4 in. - #40 mesh - Brass
5	8024764	1	COVER .. Strainer
6	8107876	2	STRAINER ASSEMBLY .. Oil suction - Incl. cover and end flange
7	8010142	2	STRAINER .. Oil suction lower
8	8025007	1	GAUGE .. Bayonet
* 9	8041650	1	GASKET .. Clean out hole - 1/32 in. thick
10	8118296	1	VALVE .. Relief - 1-1/4 P.T. brass - Set at 50# pressure
11	- - - -	1	COOLER .. Oil - See Parts List No. 927
12	8034832	1	FILTER .. Lube oil (Michiana) - See Parts List No. 926
13	8033854	1	FILTER .. Lube oil (Nugent) - See Parts List No. 924
14	8022291	1	FILTER .. Lube oil (Nugent) - See Parts List No. 924
*15	8035925	1	GAUGE .. Oil line - 3/8 F.P.T.
*16	8045502	1	GASKET .. Gauge
*17	8045501	1	GLASS .. Gauge
18	8064150	1	VALVE .. Angle - 1 P.T. brass
19	8022450	1	GASKET .. 1 in. drain - Oil tank
*20	8020822	1	GASKET .. 3/4 in. filter outlet to oil tank
21	8022305	1	GASKET .. 2 in. outlet - Oil cooler
22	8024477	2	GASKET .. 1-1/4 in. flange - Piston cooling and by-pass line
23	8020834	2	GASKET .. 1-1/2 in. flange - Oil tank inlet and press. pump line
24	8029467	1	GASKET .. 4 in. outlet - Scavenging pump
25	8042933	1	HOSE .. Metal flexible - 1-1/2 I.D. x 13 in. lg.
*26	8038897	2	GASKET .. 3-1/4 in. flange - Oil pump to sump and oil tank
27	8032123	1	GAUGE .. Lube oil pressure - See Parts List No. 935
28	8024624	1	Gauge .. Piston cooling oil pressure
29	8015095	1	CYLINDER ASSEMBLY .. Fuel shut off
30	8004773	1	VALVE .. Magnet
31	- - - -	1	ENGINE .. Diesel - See Parts Group 300 - 400

P. L. No. A924

LUBE OIL PIPING SCHEMATIC
LUBE OIL TANK WITH EXTERNAL FILTER
1000 H.P. LOCOMOTIVE

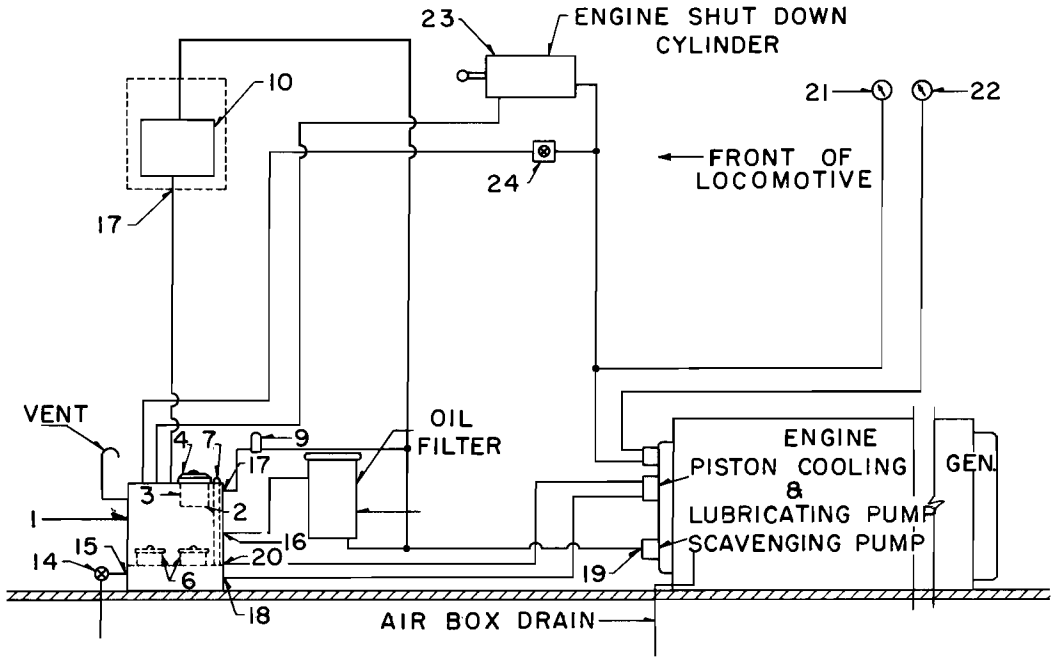

PLATE A924-2

Ref. No.	Part Number	No. Req.	Description
1	8031431	1	TANK ASSEMBLY .. Lube oil
2	8022275	1	STRAINER .. Basket - Top
3	8122086	1	SCREEN .. Brass - #40 mesh - 36 in. x 36 in.
4	8022276	1	COVER .. Strainer
* 5	8102903	2	STRAINER ASSEMBLY .. Oil suction
6	8009934	2	STRAINER .. Oil suction
7	8022285	1	GAUGE .. Bayonet
* 8	8041650	1	GASKET .. Clean out hole
9	8004509	1	VALVE .. Relief - 2 in. P.T. brass - 50#
10	8034221	2	COOLER .. Oil - See P. L. No. 927
11	8034832	1	FILTER .. Lube oil (Michiana) - See P. L. No. 926
12	8033854	1	FILTER .. Lube oil (Nugent) - See Plate 924-3
13	8022291	1	FILTER .. Lube oil (Nugent) - See Plate 924-3
14	8064150	2	VALVE .. Angle - 1 in. P.T. brass
15	8022450	1	GASKET .. 1 in. drain - Oil tank
16	8020822	1	GASKET .. 3/4 in. filter outlet to oil tank
17	8015648	6	GASKET .. 2 in. flange - Oil cooler and oil tank
18	8022305	1	GASKET .. 2 in. flange - Oil tank
19	8022448	1	GASKET .. Scavenging pump outlet fitting
20	8022304	1	GASKET .. 1-1/4 in. flange - Oil tank
21	8032123	1	GAUGE .. Lube oil pressure - See P. L. No. 935
22	8024624	1	GAUGE .. Piston cooling oil pressure
23	8034247	1	CYLINDER ASSEMBLY .. Fuel shut-off
24	8004773	1	VALVE .. Magnet

P. L. No. A924

LUBE OIL FILTER
EARLY 600 AND 1000 H.P. LOCOMOTIVES
WITH EXTERNAL FILTER
PLATE A924-3

Ref. No.	Part Number	No. Req.	Description
1	8033854	X	FILTER .. Lube oil (Nugent Type 1116 - UV - 4R)
2	8022291	X	FILTER .. Lube oil (Nugent Type 1116 - HA - 4R)
3	8047410	1	SHELL .. Filter
4	8047423	1	PLATE .. Instruction
* 5	103868	1	PLUG .. Pipe - Shell
6	8047417	4	BOLT .. Hinge
7	114498	4	NUT .. Hex. - Eye bolt hinge - Replaces 122366
8	8047420	4	BOLT .. Eye - Cover clamping
9	106641	4	NUT .. Hex.
10	8047612	4	WASHER .. Eye bolt
11	8047419	1	COVER .. Filter
12	8047409	1	COCK .. Air vent
13	8047418	1	SPRING .. Shock - Element
14	8047381	1	GASKET .. Cover to shell
*15	8033959	1	ELEMENT .. Filter
16	8047404	1	SPOOL .. Filter bag
17	8047615	8	STUD .. Filter bag spool
18	8047408	1	HANDLE .. Cross - Filter bag spool
19	8047428	1	SPRING .. Relief valve ball
20	8047416	1	BALL .. Relief valve
21	8047421	4	GASKET .. Filter bag spool
22	8027656	8	SPRING .. Bag clamp
23	8047406	4	RING .. Bag clamp
24	8047412	8	CLAMP .. Bag
25	8047425	8	NUT .. Wing - Bag clamp
26	8047426	4	MAT .. Wire screen - Bag spacer
27	8047413	1	BASKET .. Screen and bag
28	8047402	1	ROD .. Key - Basket
29	8047380	4	BAG .. Filter (wool)
*30	8041023	1	ELEMENT .. Filter (Michiana Type)
*31	8035734	1	WASTEX .. Filter (for Michiana Type Filter)
*32	8025093	2	BELT .. Filter support - Includes studs
*33	8104759	1	BRACKET .. Filter support
*34	100186	2	BOLT .. Hex. head - Belt to bracket
*35	103325	2	WASHER .. Lock
*36	117066	2	NUT .. Hex.

/ The 1116 VU-4R and 1116 HA-4R filters are identical except for the position of the outlets. The 1116 VU-4R has the inlet at center of the bottom and the outlet at the top on the side of the shell. The 1116 HA-4R has both the inlet and outlet at the bottom. Place the 103868 pipe plug in the bottom of the shell for the 1116 VU-4R Type or in the side for the 1116 HA-4R Type.

// 8041023 Element may be used to replace 8033959 filter element assembly. If this is done, it is important that the inlet and outlet be the reverse of installation for the 8033959 element assembly. For the Type 1116 VU-4R, the inlet connection should be at the top on the side and the outlet at the center of the bottom. For the Type 1116 HA-4R, the inlet should be at the side on the bottom and the outlet in the center of the bottom.

P. L. No. A924

LUBE OIL FILTER
EARLY 600 AND 1000 H.P. LOCOMOTIVES

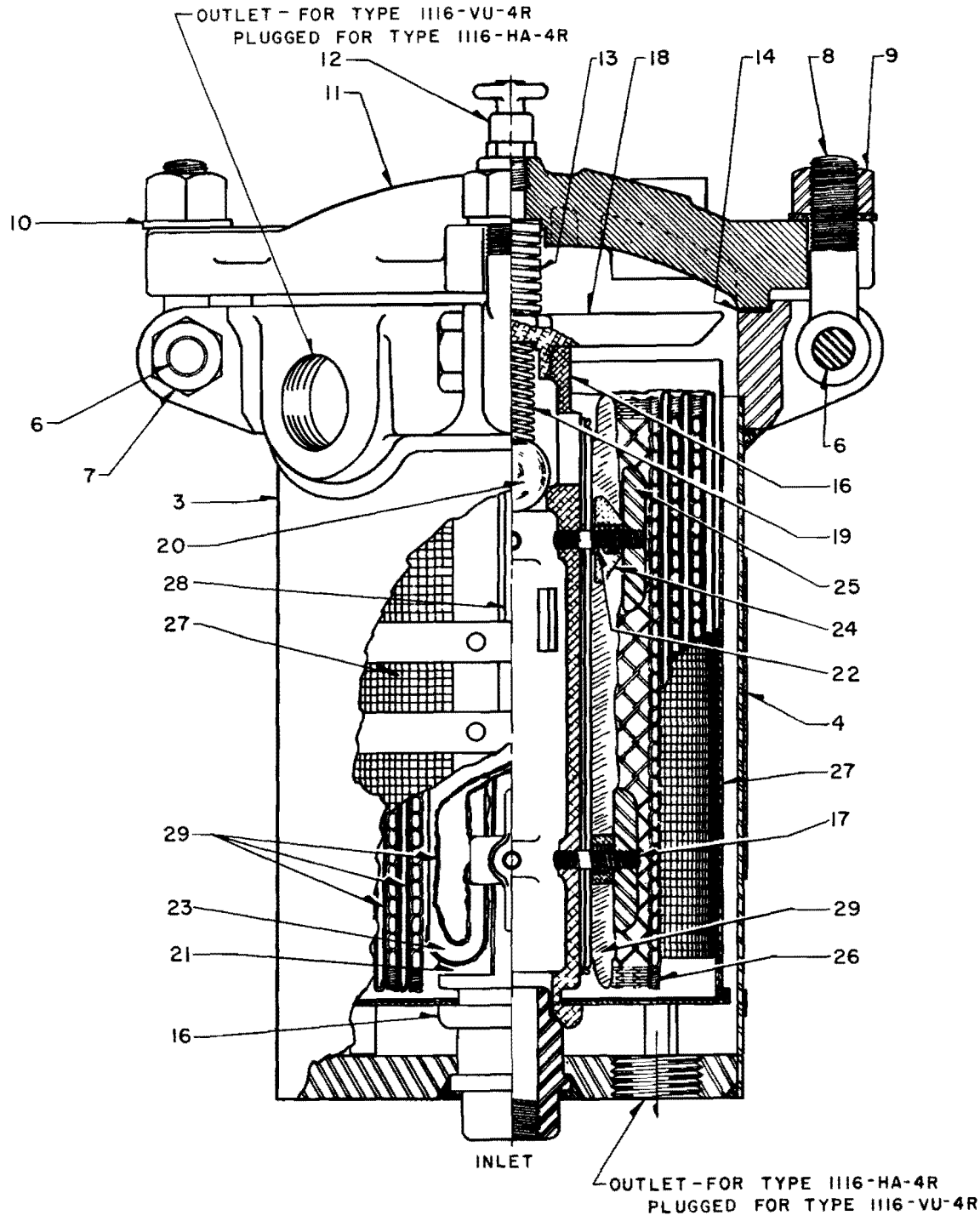

PLATE A924-3

LUBE OIL TANK AND FILTER

FT, SW1, NW2, SW7, E5, E6, E7, TR2, TR3, TR4 LOCOMOTIVES

RECTANGULAR TANK FILTER

SW1, NW2, SW7, E5, E6, E7, TR2, TR3, TR4 LOCOMOTIVES

PLATE B925-1 AND 2

Ref. No.	Part Number	No. Required					Description
1	8054602	X	-	-	-	-	TANK ASY. .. Lube oil - E5, E6 with horizontal suction strainer
2	8055043	-	X	-	-	-	TANK ASY. .. Lube oil - SW1 with horizontal suction strainer
3	8055129	-	-	X	-	-	TANK ASY. .. Lube oil - TR2, TR3, NW2 with horiz. suction strainer
4	8068788	-	-	-	X	-	TANK ASY. .. Lube oil - E6, E7 with angle mtd. suction strainer
5	8134622	-	-	-	-	X	TANK ASY. .. Lube oil - TR4, SW1, NW2, SW7 with angle mounted suction strainer
6	8054713	4	4	4	4	4	ELEMENT .. Filter - See P. L. 928
7	8054629	4	4	4	-	4	BUSHING .. Guide
8	8054625	4	4	4	4	4	CAP .. Pressure cylinder
9	8054617	4	4	4	4	4	SPRING .. Cylinder cap
10	8054628	4	4	4	4	4	NUT .. Clamping - Cylinder cap - 1-5/16-12
11	8054630	4	4	4	-	4	PIPE .. Discharge
*12	8064008	-	-	-	4	-	BOLT .. Discharge pipe - 1-5/16 - 12 x 4-11/16
13	8054631	4	4	4	-	4	CYLINDER .. Pressure
*14	8062782	-	-	-	4	-	CYLINDER .. Pressure
15	8054615	1	1	1	-	1	PLATE .. Brace
16	8054626	4	4	4	-	4	FLANGE .. Pressure cylinder
17	8054627	4	4	4	-	4	GASKET .. Flange to pressure cylinder support
18	8054619	1	1	1	-	1	SUPPORT .. Pressure cylinder
19	8054633	1	1	1	-	1	COLLAR .. Screw - Support assembly to oil tank
20	8054604	1	1	1	-	1	COVER ASSEMBLY .. Filter
*21	8064168	-	-	-	1	-	COVER ASSEMBLY .. Filter
22	8054583	4	4	4	4	4	GLASS ASSEMBLY .. Sight
23	8055847	4	4	4	4	4	GLASS .. Sight
24	8055849	4	4	4	4	4	GASKET .. Sight glass - 1/8 in.
24A	8055848	4	4	4	4	4	GASKET .. Sight glass - 1/16 in.
25	8055850	4	4	4	4	4	GASKET .. Housing - 1/16 in. thick
26	8055851	4	4	4	4	4	HOUSING .. Sight glass
27	8060215	4	4	4	4	4	RING .. Gasket retaining
28	187828	16	16	16	16	16	SCREW .. Socket head - 10-32 x 1/2
29	8054607	1	1	1	1	1	GASKET .. Cover to tank
*30	8107101	2	2	2	2	2	ANGLE .. Cover - 16-3/4 in. lg.
31	8107296	2	2	2	2	2	ANGLE .. Gasket retaining - 5/8 x 5/8 x 1/8 - 16-1/2 lg.
32	171420	12	12	12	12	12	SCREW .. 10-24 x 3/8 round head self-tapping
33	8020893	2	4	4	4	4	NUT .. Knurled - 3/8-16 - Filter and filler cover
34	8020891	2	4	4	4	4	BOLT .. Lube oil tank filler swivel - 3/8-16
35	8032459	2	2	2	4	4	PIN .. Swivel bolt - 3/8 in. x 1-3/8 in.
36	103372	2	2	2	4	4	PIN .. Cotter - 3/32 x 1/2 in. lg.
37	8068502	2	2	2	2	-	STRAINER ASSEMBLY .. Lube oil suction
38	8134652	-	-	-	-	2	STRAINER ASSEMBLY .. Lube oil suction
39	8065373	2	2	2	2	-	BODY .. Strainer
40	8151846	-	-	-	-	2	BODY .. Strainer
41	- - - -	As Required					SCREEN .. #40 - Mesh - Brass - 12-1/4 in. x 14-1/2 in. req. - Avail. 36 in. x 36 in. - 8122086
42	8042597	2	2	2	2	2	RING .. Seat
43	8042596	2	2	2	2	2	SPRING .. Seat ring
44	8042598	2	2	2	2	2	RING .. Seat ring retainer
45	113988	8	8	8	8	8	SCREW .. 1/4-20 x 1/2 flat head slotted

P. L. No. C925

LUBE OIL TANK AND FILTER

Ref. No.	Part Number	No. Required					Description
-	8054602	X	-	-	-	-	TANK ASSEMBLY .. Lube oil (cont'd.)
-	8055043	-	X	-	-	-	TANK ASSEMBLY .. Lube oil (cont'd.)
-	8055129	-	-	X	-	-	TANK ASSEMBLY .. Lube oil (cont'd.)
-	8068788	-	-	-	X	-	TANK ASSEMBLY .. Lube oil (cont'd.)
-	8134622	-	-	-	-	X	TANK ASSEMBLY .. Lube oil (cont'd.)
46	8060780	2	2	2	2	2	GASKET .. Suction strainer to tank - Replaces 8054632
47	8080445	-	-	-	-	1	CRAB .. Lube oil strainer
48	8085246	-	-	-	-	1	WHEEL .. Hand - Lube oil strainer
49	8062788	-	-	-	1	1	STRAINER ASSEMBLY .. Lube oil tank filler
50	8134698	-	-	-	-	1	COVER .. Strainer assembly
51	8134697	-	-	-	-	1	GASKET .. Strainer cover
52	179840	8	-	-	-	-	BOLT .. Strainer to tank - 3/8-16 x 1-1/8 hex.hd.- Replaces 106331
53	173825	-	8	-	8	-	BOLT .. Strainer to tank - 1/2-13 x 1-1/4 hex. head
53A	106341	-	-	8	-	-	BOLT .. Strainer to tank - 1/2-13 x 1-1/8 hex. head
54	103321	8	12	12	-	-	WASHER .. Lock - 3/8
55	103323	-	6	14	14	-	WASHER .. Lock - 1/2
55A	103325	-	8	-	-	-	WASHER .. Lock - 5/8
56	8055330	-	1	1	-	-	HOUSING .. Filler - Oil tank
57	8055331	-	1	1	-	-	COVER .. Filler housing
58	8042475	-	1	1	-	-	PIN .. Hinge - 1/4 in. x 7-3/8 in.
59	103361	-	6	6	-	-	PIN .. Cotter - 1/16 x 1/2 in. lg.
60	8020890	-	2	2	-	-	PIN .. Swivel bolt - 1/4 in. x 1-11/16 in.
61	8042493	-	1	1	-	-	SCREEN ASSEMBLY .. Lube oil filler
62	8055007	-	1	1	-	-	GAUGE .. Bayonet
63	8059738	-	1	1	-	-	BRACKET .. Gauge
64	8042476	-	2	2	-	-	PIN .. Bracket support
							NOTE: Items 62, 63, and 64 not used on Model 567A engine.
65	8041740	-	1	1	-	-	GASKET .. Lube oil tank filler to tank
66	179839	-	12	12	-	-	BOLT .. Filler to tank - 3/8-16 x 1 hex. head
67	178100	-	6	6	-	-	BOLT .. Lube oil tank to floor - 1/2-13 x 1 hex.hd.- Replaces 173819
68	8024765	1	-	-	-	-	STRAINER .. Basket - Top strainer in lube oil tank
69	8104776	1	-	-	-	-	SCREEN .. Bottom - 9-5/8 in. dia.
70	8116385	1	-	-	-	-	SCREEN .. Side - 7-1/4 in. x 30-1/4 in.
71	8054609	1	-	-	-	-	COVER .. Oil tank filler
72	8054677	1	-	-	-	-	GAUGE .. Bayonet
*73	8069001	-	-	-	1	-	VALVE .. Pressure relief - 2-1/4 in. flange mounted connection - 50 - 55# pressure
*74	8130984	-	-	1	-	1	VALVE .. Pressure relief - 2 in. male base connection - 2 in. female side outlet - 50# pressure
*75	8118296	-	1	-	-	-	VALVE .. Pressure relief - 1-1/4 in. male base connection - 1-1/4 in. female side outlet - 50# pressure
*76	8004509	1	-	-	-	-	VALVE .. Pressure relief - 2 in. female base connection - 2 in. female side outlet - 50# pressure

P. L. No. C925

LUBE OIL TANK AND FILTER

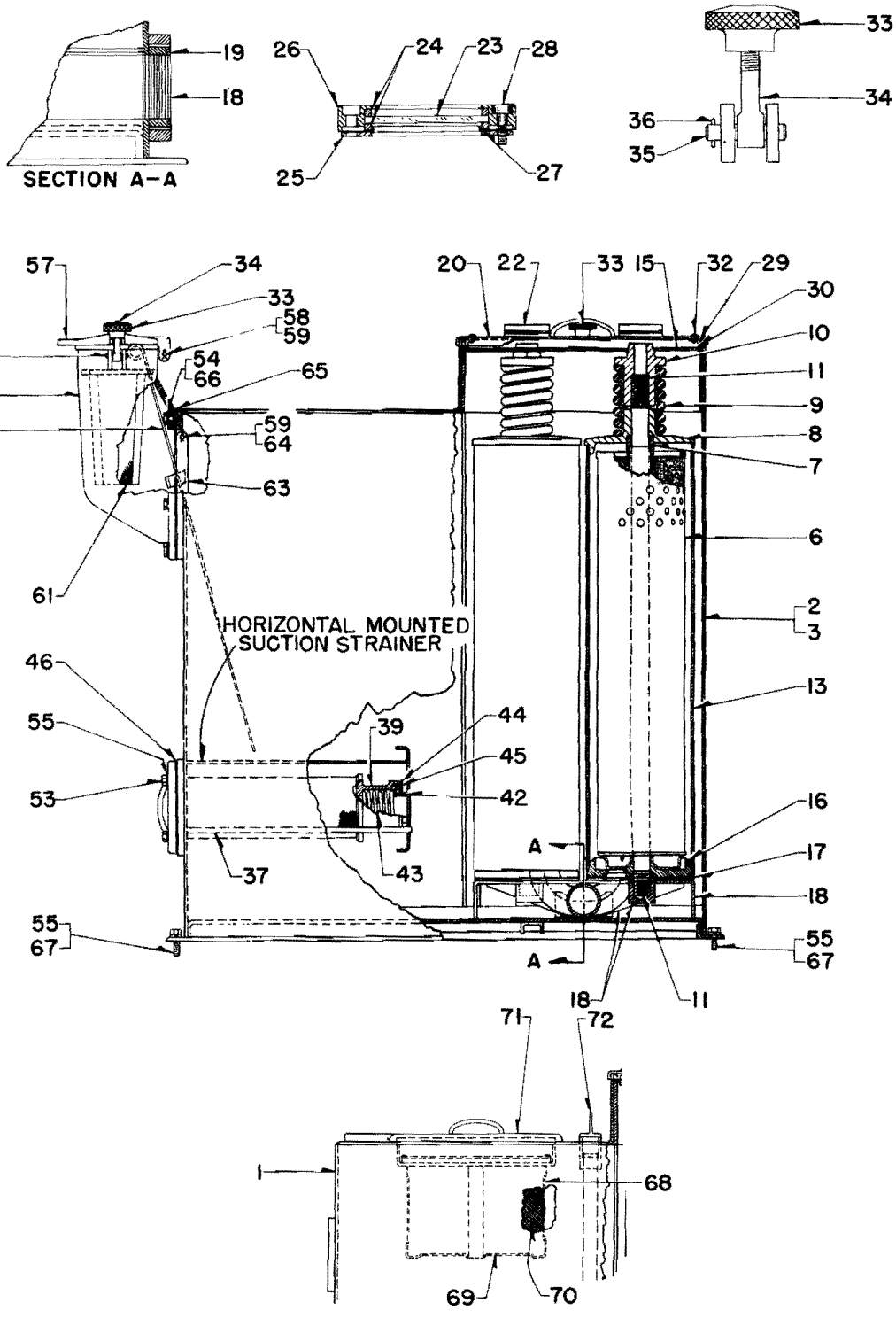

RECTANGULAR TANK WITH HORIZONTAL MOUNTED SUCTION STRAINER
SW1, NW2, TR2, TR3, E5, E6 LOCOMOTIVES

PLATE B925-1

P. L. No. C925

LUBE OIL TANK AND FILTER

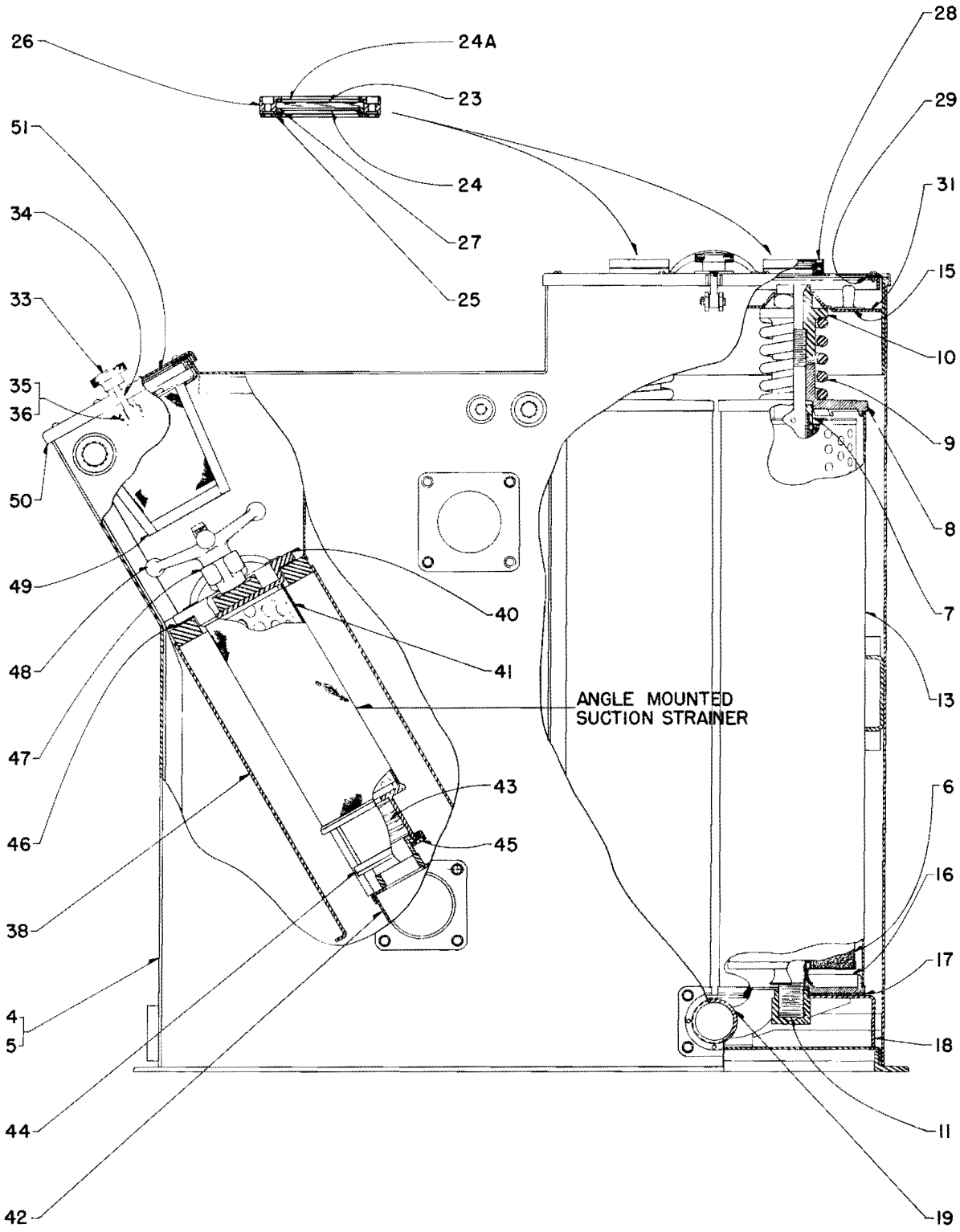

RECTANGULAR TANK WITH ANGLE MOUNTED SUCTION STRAINER
SW1, NW2, SW7, TR4, E6, E7 LOCOMOTIVES

PLATE B925-2

P. L. No. C925

LUBE OIL TANK AND FILTER

FT, FTA LOCOMOTIVES

PLATE B925-3

Ref. No.	Part Number	No. Req.		Description
* 1	- - - -	X	-	TANK ASY. .. Lube oil - FT locomotive
2	8077164	-	X	TANK ASY. .. Lube oil - FTA locomotive
3	8077126	1	1	BODY ASY. .. Lube oil tank
4	8041728	1	-	COOLER ASY. .. Lube oil - See P.L. 927
5	8228373	-	1	CORE .. Lube oil cooler - Replaces 8501534
* 6	8168621	4	-	ELEMENT .. Filter - Replaces 8035047 - See P.L. 928
7	8077094	-	1	ELBOW .. Inlet - R.H.
* 8	8077062	-	1	ELBOW .. Inlet - L.H.
9	8024321	-	2	GASKET .. Inlet elbows
10	8072310	-	1	HEADER .. Lube oil cooler core
11	8018975	-	2	GASKET .. Header to core
12	8070778	-	1	GASKET .. Clamp plate to core
13	8070673	-	2	PLATE .. Clamp - Lower
14	8160755	-	2	PLATE .. Clamp - Upper
*15	8072501	-	1	GASKET .. Hand hole cover
*16	8071598	-	2	GASKET .. Hand hole cover
*17	8077741	-	1	GASKET .. Hand hole cover
*18	8042579	-	1	GASKET .. Hand hole cover
*19	8077204	1	-	DISCHARGE TUBE .. Filter to tank
*20	8042542	1	-	ELBOW .. 3 in. solder
21	8041732	2	2	GASKET .. Inlet elbow
*22	179895	4	-	BOLT .. 1/4-13 x 4 hex. hd. - Replaces 173865
*23	103323	8	-	WASHER .. Lock - 1/2
*24	8077220	1	-	OIL LINE .. Scavenging
*25	8064131	1	-	ELBOW .. Flanged - 3 sol. - Replaces 8041735
*26	144023	1	-	PLUG .. Pipe - 3/4 P.T.
*27	173825	4	24	BOLT .. 1/2-13 x 1-1/4 hex. hd.
28	8077001	2	2	STRAINER ASY. .. Lube oil suction
29	8075784	2	2	BODY .. Strainer asy.
30	8075699	2	2	SCREEN
31	8075801	2	2	SCREEN
32	8042573	2	2	SPRING .. Lube oil strainer
33	8042574	2	2	RING .. Retainer
34	8069583	2	2	RING .. Seat
35	113988	8	8	BOLT .. 1/4-20 x 1/2 flat hd. slotted
36	8075654	2	2	BAR ASY. .. Clamping
37	103346	4	4	WASHER .. Plain
38	451415	4	4	NUT .. 3/4-10 hex. - Replaces 173688
39	8075769	1	1	STRAINER ASY. .. Lube oil filler
40	8020893	2	2	NUT .. Knurled - Filler cover - 2-1/4 in. x 1-1/4 in.
41	8020891	2	2	BOLT .. Swivel - 3/8-16 x 2-3/8
42	8032459	2	2	PIN .. Clevis - 1/4 x 1-3/16
43	103372	2	2	PIN .. Cotter - 3/32 x 1/2
44	8075645	1	1	COVER .. Strainer asy.
45	8060954	3	3	NIPPLE .. Close - 1 P.T.
46	8004075	2	2	VENT .. Protectoseal - 1 in.

P. L. No. C925

LUBE OIL TANK AND FILTER

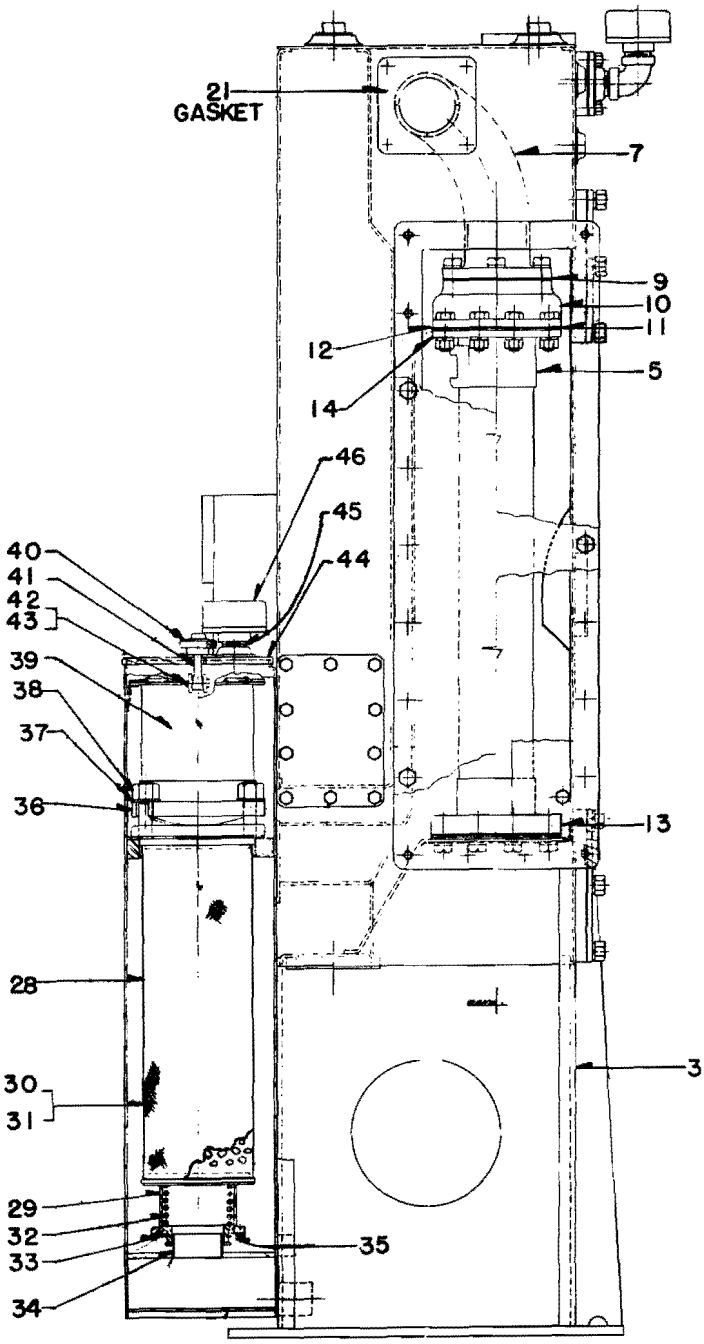

Ref. No. 2

PLATE B925-3

Parts List No. G926

LUBE OIL FILTER

Cylindrical Tank Four Element Less Oil Baffle
PLATE F926-1

Ref. No.	Part Number	Number Required					Description
* 1	8042382	A	-	-	-	-	FILTER .. Lube oil - FT
2	8090027	-	B	-	-	-	FILTER .. Lube oil - F2, F3, F7, F9, FL9, FP7, FP9 - Replaced by 8269341 - See Plate 926-2
3	8142823	-	-	C	-	-	FILTER .. Lube oil - GP7, GP9 - Replaced by 8269343 - See Plate 926-2
4	8127684	-	-	-	D	-	FILTER .. Lube oil - E8, E9 - Replaced by 8269342 - See Plate 926-2
5	8165183	-	-	-	-	E	FILTER .. Lube oil - SW8, SW9, SW600, SW900, SW1200, SD7, SD9 - Replaced by 8269344 - See Plate 926-2
COVER . . Lube Oil Filter							
* 6	8067206	1	-	-	-	-	COVER .. Lube oil filter
7	8276138	-	1	1	-	1	COVER .. Lube oil filter
8	8160097	-	-	-	1	-	COVER .. Lube oil filter
9	8075964	1	1	1	1	1	GASKET .. Lube oil filter cover
10	8035060	8	-	-	8	8	BOLT .. Eye - 3/4-10
11	8098235	-	8	8	-	-	BOLT .. Eye - 3/4-10
12	106268	8	8	8	8	8	WASHER .. Plain - 3/4
13	220081	8	8	8	8	8	NUT .. Eye bolt - 3/4-10 hex. - Replaces 451415
14	271588	8	8	8	8	8	BOLT .. Eye bolt to filter shell - 5/8-18 x 2-1/4 hex. hd.
15	114498	8	8	8	8	8	NUT .. Jam - 5/8-18 hex.
16	8098236	-	1	1	1	1	PIN .. Hinge - Filter cover to shell
17	187988	-	2	2	2	2	PIN .. Cotter - 3/16 x 1-1/4 in. long
ELEMENT . . Filter							
18	8168621	4	4	4	4	4	ELEMENT .. Filter - Replaces 8035047 - See P. L. 928
19	8262493	4	4	4	4	4	CARTRIDGE .. Filter - 100% white 8281232 CARTRIDGE .. Filter - 50% colored
CRADLE . . Filter Element							
20	8292761	-	1	1	1	1	CRADLE .. Filter element - Replaces 8080498
21	8067199	4	4	4	4	4	GUIDE .. Filter element
22	8098238	1	1	1	1	1	ROD .. Center - Includes coupling - Replaces 8067201
23	8067200	1	1	1	1	1	RETAINER .. Filter element
24	220081	1	1	1	1	1	NUT .. Retainer to center rod
VALVE . . Relief							
25	8067193	1	1	1	1	1	BODY .. Relief valve
26	8067196	1	1	1	1	1	GASKET .. Relief valve body
27	8067195	1	1	1	1	1	RING .. Gasket retainer
28	179839	14	12	12	14	12	BOLT .. Gasket retainer ring - 3/8-16 x 1 in. long - Replaces 100134
29	103321	14	12	12	14	12	WASHER .. Lock - 3/8

NOTE: See M. I. 926, 9524 and 9525 for modernization of lube oil filters.

P. L. No. G926

LUBE OIL FILTER

Ref. No.	Part Number	Number Required					Description
		A	B	C	D	E	
-	- - - -						FILTER .. Lube oil
VALVE . . Relief							
30	8035259	5	5	5	5	5	PISTON .. Relief valve
31	8035263	5	5	5	5	5	SPRING .. Relief valve
32	8067194	5	5	5	5	5	PLUG .. Relief valve - Headless slotted
33	8067202	5	5	5	5	5	PLUG .. Relief valve - Hex. hd.
34	8067203	5	5	5	5	5	GASKET .. Relief valve plug
PLUG . . Drain and Vent							
35	103880	-	1	3	1	1	PLUG .. Pipe - Vent - 1/2-14 sq. hd.
36	103868	1	-	-	-	-	PLUG .. Pipe - Vent - 1/2-14 sq. hd.
37	103881	-	1	-	2	2	PLUG .. Pipe - Drain - 3/4-14 sq. hd.
38	103869	2	-	-	-	-	PLUG .. Pipe - Drain - 3/4-14 sq. hd.
39	103882	-	1	-	1	-	PLUG .. Pipe - Drain - 1 P. T.

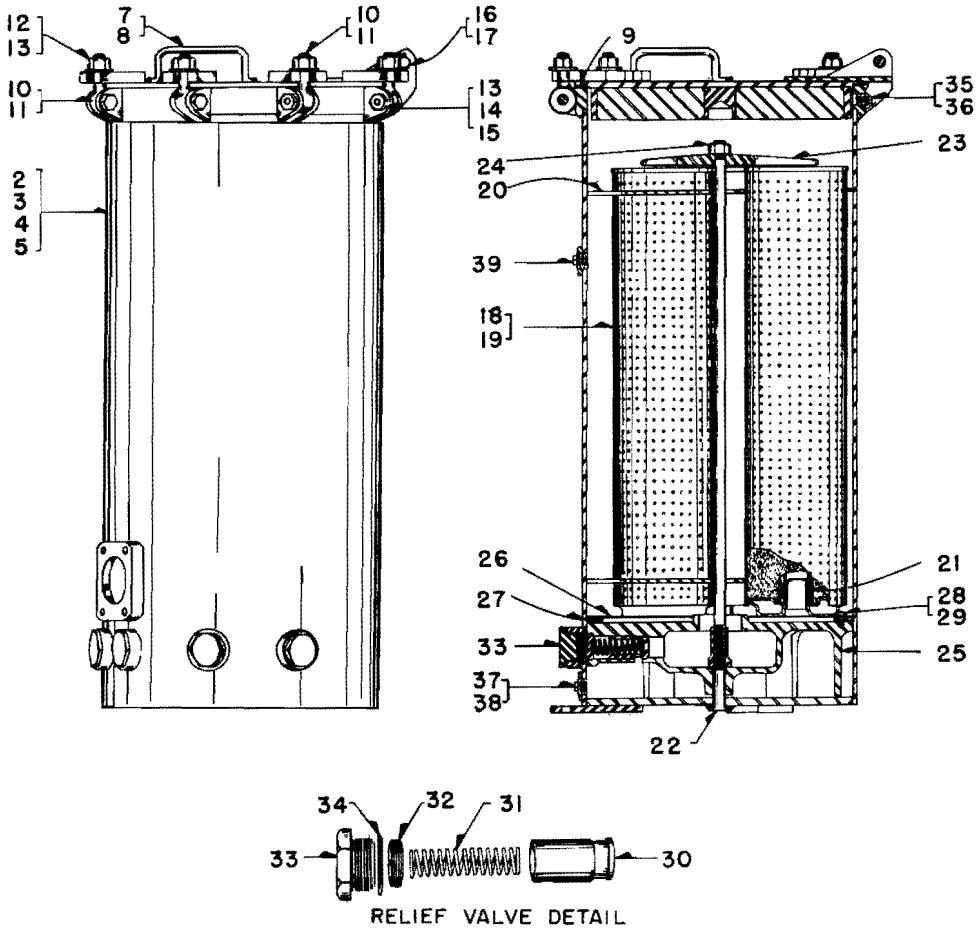

PLATE F926-1

P. L. No. G926

LUBE OIL FILTER

Cylindrical Tank Four Element With Oil Baffle

PLATE G926-2

Ref. No.	Part Number	Number Required				Description
FILTER . . Lube Oil						
1	8269341	A	-	-	-	FILTER . . Lube oil - Replaces 8090027
2	8269342	-	B	-	-	FILTER . . Lube oil - Replaces 8127684
3	8269343	-	-	C	-	FILTER . . Lube oil - Replaces 8142823
4	8269344	-	-	-	D	FILTER . . Lube oil - Replaces 8165183
COVER . . Lube Oil Filter						
5	8276138	1	-	1	1	COVER . . Lube oil filter
6	8160097	-	1	-	-	COVER . . Lube oil filter
7	8075964	1	1	1	1	GASKET . . Cover to filter shell
8	8098236	1	1	1	1	PIN . . Hinge
9	187988	2	2	2	2	PIN . . Cotter - Hinge pin - 3/16 x 1-1/4 in. lg.
10	8035060	8	8	8	8	BOLT . . Eye - 3/4-10 thread
11	271588	8	8	8	8	BOLT . . Eye bolt to filter shell - 5/8-18 x 2-1/4 hex. hd.
12	106268	8	8	8	8	WASHER . . Plain - Cover to eye bolt nut - 3/4
13	114498	8	8	8	8	NUT . . Eye bolt to filter shell bolt - 5/8-18 hex.
14	220081	8	8	8	8	NUT . . Cover to eye bolt - 3/4-10 hex. - Replaces 451415
CRADLE ASSEMBLY . . Filter Element						
15	8276139	1	1	1	1	CRADLE ASSEMBLY . . Filter element
*16	179839	7	7	7	7	BOLT . . Cradle to filter shell - 3/8-16 x 1 hex. hd.
*17	103321	7	7	7	7	WASHER . . Lock - Cradel to filter shell bolt - 3/8
18	8098238	1	1	1	1	ROD ASSEMBLY . . Center - Includes coupling
19	8067200	1	1	1	1	RETAINER . . Filter element
20	220081	1	1	1	1	NUT . . Retainer to center rod - 3/4-10 hex.
21	8067199	1	1	1	1	GUIDE . . Element
ELEMENT . . Lube Oil Filter						
22	8168621	4	4	4	4	ELEMENT . . Lube oil filter - Cage type - See P. L. 928
23	8262493	4	4	4	4	CARTRIDGE . . Filter - 100% white 8281232 CARTRIDGE . . Filter 50% colored - Optional 8275432 CARTRIDGE . . Filter - Cageless - 50% colored - Optional
VALVE . . Relief						
24	8067202	5	5	5	5	PLUG . . Relief valve - Hex. hd.
25	8067203	5	5	5	5	GASKET . . Relief valve plug
26	8067194	5	5	5	5	PLUG . . Relief valve - Headless slotted
27	8035263	5	5	5	5	SPRING . . Relief valve
28	8035259	5	5	5	5	PISTON . . Relief valve
29	8067193	1	1	1	1	BODY . . Relief valve
30	8067196	1	1	1	1	GASKET . . Relief valve body to filter shell
31	8067195	1	1	1	1	RING . . Gasket retainer
32	179839	12	12	12	12	BOLT . . Retainer ring to valve body - 3/8-16 x 1 hex. hd.
33	103321	12	12	12	12	WASHER . . Lock - Retainer ring to valve body - 3/8

P. L. No. G926

LUBE OIL FILTER

Ref. No.	Part Number	Number Required				Description
		A	B	C	D	
-	- - - - -					FILTER .. Lube oil
PLUG .. Drain and Vent						
*34	103882	2	-	2	2	PLUG .. Pipe - Drain - 1 M. P. T. square hd.
*35	103881	1	2	-	2	PLUG .. Pipe - Drain - 3/4 M. P. T. square hd.
*36	143981	1	1	2	1	PLUG .. Pipe - Drain and vent - 1/2 M. P. T. square hd.

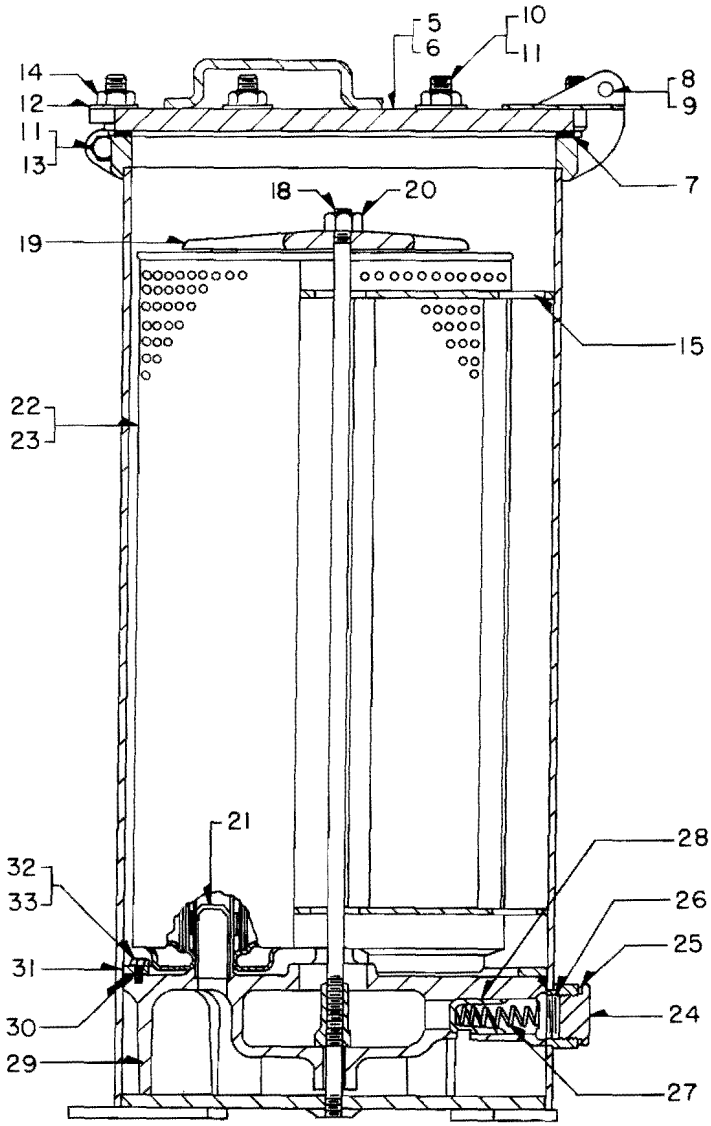

LUBE OIL FILTER

Ref. Nos. 1 thru 4

PLATE G926-2

LUBE OIL FILTER
SW1, NW2 WITH EXTERNAL FILTER

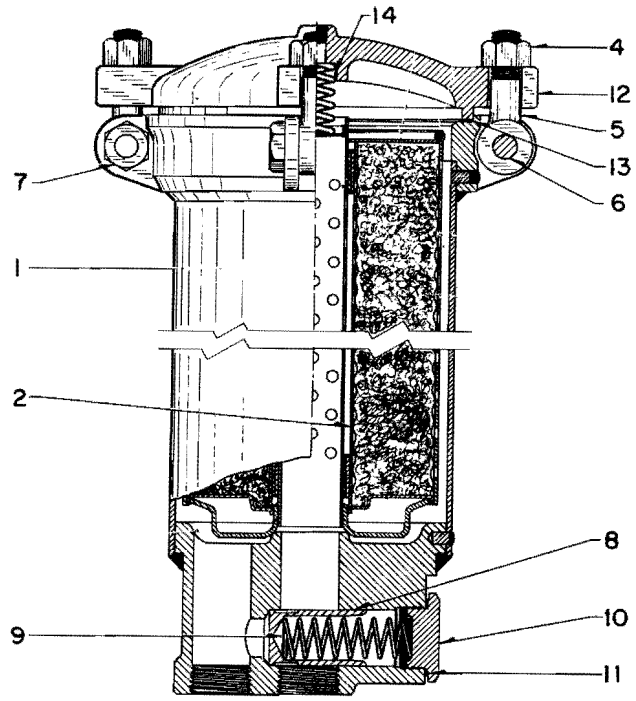

PLATE G926-3

Ref. No.	Part Number	No. Req.	Description

FILTER . . Lube Oil

1	8034832	1	FILTER . . Lube oil - Type 17050 Michiana

ELEMENT AND SHELL ASSEMBLY . . Lube Oil Filter

2	8168621	1	ELEMENT . . Filter - See P. L. 928
3	8035087	1	SHELL ASSEMBLY . . Filter
4	220081	4	NUT . . Eye bolt - Hex. 3/4-10 - Replaces 451415
5	8035060	4	BOLT . . Eye - 3/4-10
6	271588	4	BOLT . . Eye bolt to shell - 5/8-18 x 2-1/4 hex. hd.
7	114498	4	NUT . . Eye bolt to shell bolt - 5/8-18 hex. -Replaces 8035266
8	8035259	2	PISTON . . Relief valve
9	8035263	2	SPRING . . Relief valve
10	8035264	2	PLUG . . Retaining - Relief valve
11	8035265	2	GASKET . . Relief valve plug

COVER . . Lube Oil Filter

12	8035258	1	COVER . . Filter
13	8047381	1	GASKET . . Filter cover
14	8035262	1	SPRING . . Cover to element

FILTER MOUNTING COMPONENTS

*15	8041297	1	BRACKET . . Filter mounting
*16	8025093	2	BELT . . Support
*17	271562	2	BOLT . . Belt to mtg. brkt. - 5/8-11 x 2 hex. hd. - Replaces 173957
*18	103325	2	WASHER . . Lock - Support belt to mounting bracket bolt - 5/8
*19	451534	2	NUT . . Support belt to mounting bracket bolt - 5/8-11

P. L. No. G926

LUBE OIL FILTER
DUAL LUBE FILTER

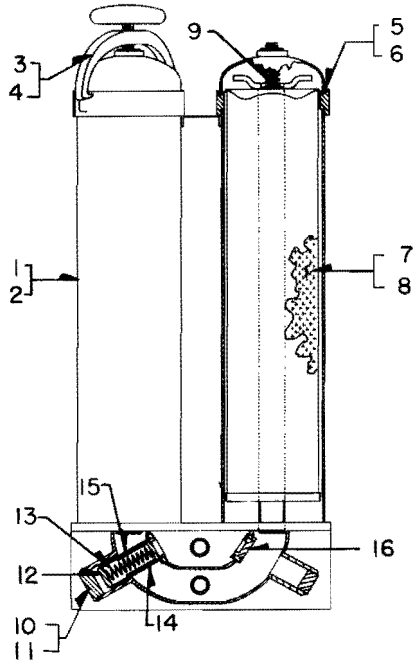

PLATE G926-4

Ref. No.	Part Number	Number Required		Description
FILTER . . Lube Oil				
1	8207645	A	-	FILTER . . Lube oil - SW600 Locomotive - Replaced by 8249387
2	8249387	-	B	FILTER . . Lube oil - SW600 Locomotive - Replaces 8207645
COVER ASSEMBLY . . Lube Oil Filter				
3	8213371	2	-	COVER ASSEMBLY . . Lube oil filter
4	8260248	-	2	COVER ASSEMBLY . . Lube oil filter
5	8213372	2	-	GASKET . . Cover
6	8253898	-	2	GASKET . . Cover
ELEMENT . . Lube Oil Filter				
7	8168621	2	-	ELEMENT . . Lube oil filter - See P. L. 928
8	8261050	-	2	ELEMENT . . Lube oil filter - See P. L. 928
9	8035262	2	2	SPRING . . Element hold down
VALVE ASSEMBLY . . Differential				
10	8067202	4	4	PLUG . . Differential valve - Hex. hd.
11	8067203	4	4	GASKET . . Differential valve hex. hd. plug
12	8067194	3	3	PLUG . . Differential valve - Headless slotted
13	8035263	3	3	SPRING . . Differential valve
14	8035259	3	3	PISTON . . Differential valve
15	8213373	3	3	BODY . . Differential valve
16	8213374	1	1	PLUG . . Restriction
PLUG . . Drain				
*17	103881	2	-	PLUG . . Pipe - Drain - 3/4 M. P. T. square hd.
*18	143981	-	2	PLUG . . Pipe - Drain - 1/2 M. P. T. square hd.
*19	8261049	-	1	BUSHING . . Pipe reducing - 1-1/2 M. P. T. x 1/2 F. P. T.

P. L. No. G926

LUBE OIL FILTER
Cylindrical Tank Filter External By-Pass Valve

PLATE G926-5

Ref. No.	Part Number	Number Required		Description
FILTER . . Lube Oil				
1	8312077	A	-	FILTER .. Lube oil - SW8, SW9, SW1200 - Replaces 8269344
2	8307921	-	B	FILTER .. Lube oil - E8, E9 - Replaces 8269342

NOTE: Filter 8312077 and 8307921 are identical except for location of oil inlet flanges. The following items are common to both filters.

CARTRIDGE . . Lube Oil Filter			
3	8275432	4	CARTRIDGE .. Filter - Cageless waste
4	220081	1	NUT .. Cartridge hold down - 3/4-10 hex.
5	8319542	1	PLATE .. Cartridge hold down
6	8067199	4	GUIDE .. Filter cartridge
COVER . . Lube Oil Filter			
7	8276138	1	COVER .. Lube oil filter
8	8075964	1	GASKET .. Cover to filter shell
9	8098236	1	PIN .. Hinge
10	187988	2	PIN .. Cotter - Hinge pin - 3/16 dia. x 1-1/4 long
11	8035060	8	BOLT .. Eye - 3/4-10 thread
12	271558	8	BOLT .. Eye bolt to filter shell - 5/8-18 x 1-1/4 hex. head
13	114498	8	NUT .. Eye bolt to filter shell - 5/8-18 hex.
14	220081	8	NUT .. Cover to eye bolt - 3/4-10 hex.
15	103346	8	WASHER .. Plain - Cover to eye bolt nut - 3/4
VALVE ASSEMBLY . . By-Pass			
16	8296034	1	VALVE ASSEMBLY .. By-pass - 20 lb.
17	103723	1	PIN .. Dowel - 3/16 x 7/8
18	8296026	1	KEEPER ASSEMBLY .. Spring
19	8296163	1	RING .. Retaining
20	8296025	1	SPRING .. Compression
*21	132033	2	SCREW .. Machine - Valve retainer to body - 10-24 x 3/8
22	8296031	1	BODY .. Valve
23	8296032	1	VALVE .. Poppet
24	8319541	1	PLATE .. Valve port cover
25	8296030	1	GASKET .. Valve port cover plate
26	179885	4	BOLT .. Cover plate to filter - 1/2-13 x 1-1/2 hex. head
27	8296020	3	SPRING .. By-pass valve retaining
PLUG . . Drain			
*28	103881	2	PLUG .. Pipe - Drain - 3/4 M. P. T. square head
*29	103882	2	PLUG .. Pipe - Drain - 1 M. P. T. square head

P. L. No. G926

LUBE OIL FILTER

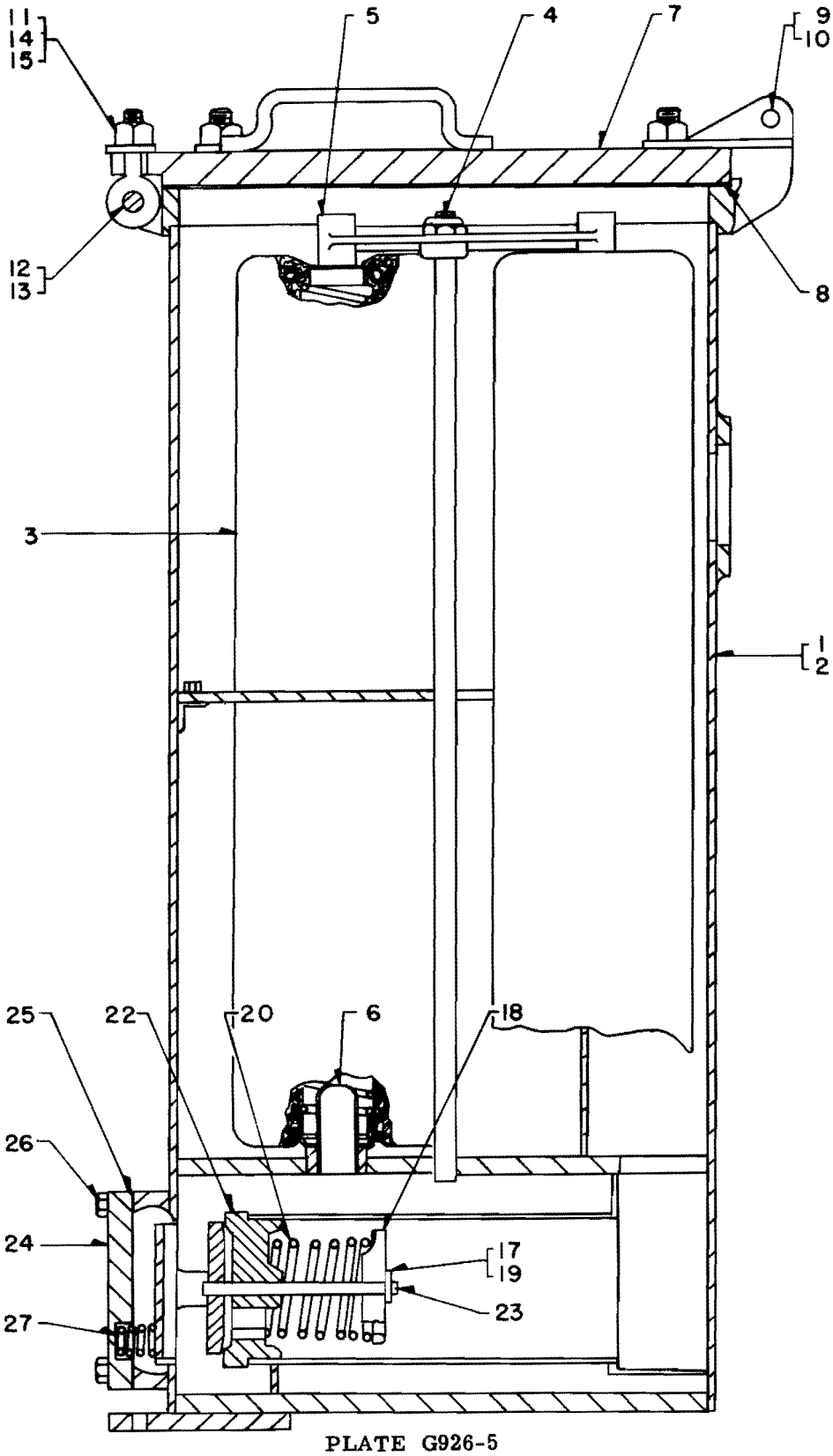

PLATE G926-5

Parts List No. L927

LUBE OIL COOLER

PLATES F927-1 and 2

Ref. No.	Part Number	Number Required						Description
1	8137460	A	-	-	-	-	-	COOLER .. Lube oil - E8, SW8 thru SW1200, TR6
2	8224518	-	B	-	-	-	-	COOLER .. Lube oil - E8 - E9
3	8183064	-	-	C	-	-	-	COOLER .. Lube oil - SD7, SD9
4	8228791	-	-	-	D	-	-	COOLER .. Lube oil - Replaced by 8259413
5	8250727	-	-	-	-	E	-	COOLER .. Lube oil - GP9
6	8259413	-	-	-	-	-	F	COOLER .. Lube oil - BL, F2, F3, F7, FP7, F9, FP9, FL9, GP7 and GP9 - Replaces 8080381 and 8228791

For conversion of lube oil cooler 8228791 to baffle and relief type lube oil cooler 8259413 or 8250727 see M. I. 9505 and 8257495 Kit Assembly Ref. No. 85.

TANK . . Lube Oil Cooler

7	8080291	-	-	-	1	-	1	TANK .. Lube oil cooler
8	8250719	-	-	-	-	1	-	TANK .. Lube oil cooler
9	187565	-	-	-	-	2	-	PLUG .. Pipe - 2 M. P. T. sq. head
10	179889	-	-	-	28	28	28	BOLT .. Tank to header - 1/2-13 x 2 hex. head
11	103323	-	-	-	28	28	28	WASHER .. Lock - 1/2
12	102637	-	-	-	28	28	28	NUT .. 1/2-13 hex.

CORE . . Lube Oil Cooler

Cooler assemblies Ref. Nos. 1 thru 6 include either alternate cores Ref. Nos. 13 thru 14 when ordering replacement cooler assembly specify, alternate core desired.

13	3125274	1	-	-	-	-	-	CORE .. Cooler (Harrison) - Alternate for 8137408
14	3129515	-	1	1	-	-	-	CORE .. Cooler (Harrison) - Alternate for 8183063
15	3136028	-	-	-	1	1	1	CORE .. Cooler (Harrison) - Alternate for 8228373
*13A	8137408	1	-	-	-	-	-	CORE .. Cooler (Young) - Alternate for 3125274
*14A	8183063	-	1	1	-	-	-	CORE .. Cooler (Young) - Alternate for 3129515
*15A	8228373	-	-	-	1	1	1	CORE .. Cooler (Young) - Alternate for 3136028
16	8189487	A. R.			-	-	-	AGITATOR .. Lube oil cooler core

HEADER . . Lube Oil Cooler

17	8080109	-	-	-	1	-	-	HEADER .. Bottom - Replaced by 8250092
18	8250092	-	-	-	-	1	1	HEADER .. Bottom
19	8080192	-	-	-	1	1	1	HEADER .. Top
20	8137189	2	2	-	-	-	-	HEADER .. Top and bottom
21	8179541	-	-	2	-	-	-	HEADER .. Top and bottom
22	457000	80	80	80	-	-	-	BOLT .. Header to core - 1/2-20 x 1-3/4 hex. head
23	114548	80	80	72	-	-	-	NUT .. 1/4-20 hex.

GASKETS AND SEALS . . Header

24	8018975	2	2	2	2	2	2	GASKET .. Header to core
25	8080343	-	-	-	1	-	-	GASKET .. Replaced by 8250509
26	8250509	-	-	-	-	1	1	GASKET .. Lower header to tank
27	8080293	-	-	-	2	2	2	GASKET .. Top header to pipe flange
28	8080346	-	-	-	1	-	-	GASKET .. Replaced by 8250627
29	8250627	-	-	-	-	1	1	GASKET .. Top header to tank
30	8080344	-	-	-	2	2	2	RING .. Oil seal - Clamp plate to pipe flange

P. L. No. L927

LUBE OIL COOLER

Ref. No.	Part Number	Number Required A	B	C	D	E	F	Description
-	- - - -							COOLER .. Lube oil
PLATE . . Clamp								
31	8160755	-	-	-	4	4	4	PLATE .. Clamp
32	179883	-	-	-	40	38	38	BOLT .. Plate to header - 1/2-13 x 1-1/4 hex. head
33	179884	-	-	-	8	8	8	BOLT .. Plate to header - 1/2-13 x 1-3/8 hex. head
34	179887	-	-	-	32	34	34	BOLT .. Plate to header - 1/2-13 x 1-3/4 hex. head
35	103323	-	-	-	80	80	80	WASHER .. Lock - 1/2
36	103343	-	-	-	-	2	2	WASHER .. Plain - 1/2
37	102637	-	-	-	32	16	16	NUT .. 1/2-13 hex.
38	8228156	-	-	-	1	1	1	PLATE .. Discharge baffle - See Note
For baffle plate used with core 3132058 in lube oil cooler 8080381, use 8131254 plate								
39	8131257	-	-	-	2	2	2	CLIP .. Baffle plate
VALVE ASSEMBLY . . Baffle and Relief								
*40	8250671	-	-	-	-	1	1	VALVE ASSEMBLY .. Baffle and relief
41	8250651	-	-	-	-	1	1	PLATE ASSEMBLY .. Relief
42	179818	-	-	-	-	2	2	BOLT .. 5/16-18 x 1 hex. head
43	8250745	-	-	-	-	2	2	SPRING .. Tension
44	8250744	-	-	-	-	1	1	SPRING .. Tension
*44A	8273680	-	-	-	-	1	1	SPRING .. Tension
45	8250623	-	-	-	-	1	1	BAR .. Clamp - Tension spring
46	8035131	-	-	-	-	2	2	NUT .. Lock - 5/16-18 hex.
47	8250624	-	-	-	-	2	2	PLATE .. Disc
48	8250625	-	-	-	-	2	2	BOLT .. 3/8-24 x 13/16 hex. head
49	103341	-	-	-	-	2	2	WASHER .. Plain - 3/8
50	102645	-	-	-	-	2	2	NUT .. Machine - 3/8-24 hex. - Slotted
51	103374	-	-	-	-	2	2	PIN .. Cotter - 3/32 x 1 in. long
52	8250626	-	-	-	-	1	1	BAR .. Tapped
53	8250826	-	-	-	-	1	1	STRIP .. Baffle retaining
54	181311	-	-	-	-	8	8	BOLT .. 1/4-28 x 5/8 hex. head
55	103319	-	-	-	-	8	8	WASHER .. Lock - 1/4
FLANGE AND CLAMP PLATE . . Lube Oil Water Inlet								
56	8080282	-	-	-	2	2	2	FLANGE .. Water inlet - 2-1/2 F. P. T.
57	179889	-	-	-	8	8	8	BOLT .. Flange to header - 1/2-13 x 1-3/4 hex.head
58	103323	-	-	-	8	8	8	WASHER .. Lock - 1/2
59	8080308	-	-	-	2	2	2	PLATE .. Clamp - Water inlet flange
60	8020824	-	-	-	8	8	8	STUD .. Clamp plate - 3/8-16 x 1-3/4 in. long
61	103321	-	-	-	8	8	8	WASHER .. Lock - 3/8
62	102635	-	-	-	8	8	8	NUT .. Machine - 3/8-16 hex.
63	190723	-	-	-	1	-	1	NIPPLE .. Pipe - 3/4 M. P. T. x 2-1/2 in. long
64	8353112	-	-	-	-	1	-	NIPPLE .. Pipe - 3/4 M. P. T. x 2 in. long
65	8060954	-	-	-	1	1	1	NIPPLE .. Pipe - 1 M. P. T. x 1-1/2 in. long
66	187056	-	-	-	2	2	2	PLUG .. Pipe - 2 M. P. T. - Sq. head
GASKETS . . Lube oil inlet and outlet flange to tank and header								
+67	8182267	-	-	4	-	-	-	GASKET .. Flange - 3-3/4 in. I. D.
+68	8263024	-	-	4	-	-	-	GASKET .. Flange - 3-1/8 in. I. D.
+69	8200722	4	4	-	-	-	-	GASKET .. Flange - 2-1/8 in. I. D.
*+69A	8080947	-	-	-	-	1	-	GASKET .. Lube oil outlet

P. L. No. L927

LUBE OIL COOLER

Ref. No.	Part Number	Number Required A	B	C	D	E	F	Description
-	- - - -							COOLER .. Lube oil
GASKETS . . Water Inlet and Tank Cover								
+70	8126649	-	-	-	2	3	2	GASKET .. Header to water pump and inlet elbow
+71	8182488	-	-	1	-	-	-	GASKET .. Cover to water tank
+72	8143833	1	1	-	-	-	-	GASKET .. Cover to water tank
+73	8234290	-	-	-	2	2	-	GASKET .. Water inlet flange - Formerly 8031624
+74	8055261	-	-	-	2	-	2	GASKET .. Water inlet flange
+75	8172645	-	-	-	2	-	2	FLANGE ASSEMBLY .. Water inlet
+76	8189388	-	-	-	2	2	-	FLANGE ASSEMBLY .. Water inlet
+77	8123238	-	-	-	2	-	-	ELBOW .. Flanged - Water inlet
+78	8058783	-	-	-	2	-	-	FLANGE .. Water inlet
+79	219859	-	-	-	2	-	-	NIPPLE .. Pipe - 2-1/2 P. T. x 5-1/2 in. long
+80	8182489	-	-	1	-	-	-	COVER .. Lube oil water tank
+81	8143834	1	1	-	-	-	-	COVER .. Lube oil water tank
+82	179881	28	28	28	-	-	-	BOLT .. Cover mounting - 1/2-13 x 1 hex. head
+83	103323	28	28	28	-	-	-	WASHER .. Lock - 1/2
+84	8004075	1	1	1	1	1	1	VENT ASSEMBLY .. Cooler over flow - See Parts List 937

LUBE OIL COOLER CONVERSION KIT

Ref. No.	Part Number	No. Req.	Description
*85	8257495	1	KIT ASY. .. Lube oil cooler conversion
86	8250671	1	VALVE ASSEMBLY .. Baffle - See Ref. No. 40
*87	8250626	1	BAR .. Tapped
*88	8250826	1	STRIP .. Baffle retaining
*89	8250509	1	GASKET .. Lower header to tank
*90	8250627	1	GASKET .. Top header to tank
*91	8018975	2	GASKET .. Headers to core
*92	8130457	1	STIFFENER .. Tank - 11 Ga. x 2-5/8 x 37 in. lg.
*93	8257494	1	PLATE .. Closure - 11 Ga. x 1-3/8 x 3-1/2 in. lg.
*94	8259669	1	PLATE .. Closure - 11 Ga. x 1-3/8 x 3-1/2 in. lg.
*95	181311	8	BOLT .. 1/4-28 x 5/8 hex. head
*96	103319	8	WASHER .. Lock - 1/4
*97	179887	2	BOLT .. 1/2-13 x 1-3/4 hex. head
*98	103343	2	WASHER .. Plain - 1/2
*99	100815	4	SCREW .. Machine - 8-32 x 3/8 flat head

ALTERNATE LUBE OIL COOLER REFERENCE CHART

Ref. No.	(Harrison) Oil Cooler Part No.	Core Tubes Qty.	Type	(Young) Oil Cooler Part No.	Core Tubes Qty.	Type	Lube Oil Cooler Assembly	No. Req.	Locomotive Model
1	3125724	396 3/8 O. D.	Plain	8137408	392 3/8 O. D.	Plain	8137460	1 1	TR5, TR6 SW8 thru SW1200
2	3129515	455 3/8 O. D.	Plain	8183063	455 3/8 O. D.	Plain	8183604 8224518	1 2	SD7, SD9 E8, E9
3	3136028	913 1/4 O. D.	Finned	8228373	914 1/4 O. D.	Finned	8228791 8250727 8259413	1	F9, FP9 FL9, GP9
4	3132058	441 5/16 O. D.	Finned - Replaces 8501534 - 3122674				8080381	1	BL, G2, F3, FP7, GP7 NW5
5	8518711	400 5/16 O. D.	Plain - Replaces 3112315 - See Pages 6 thru 10						

P. L. No. L927

LUBE OIL COOLER

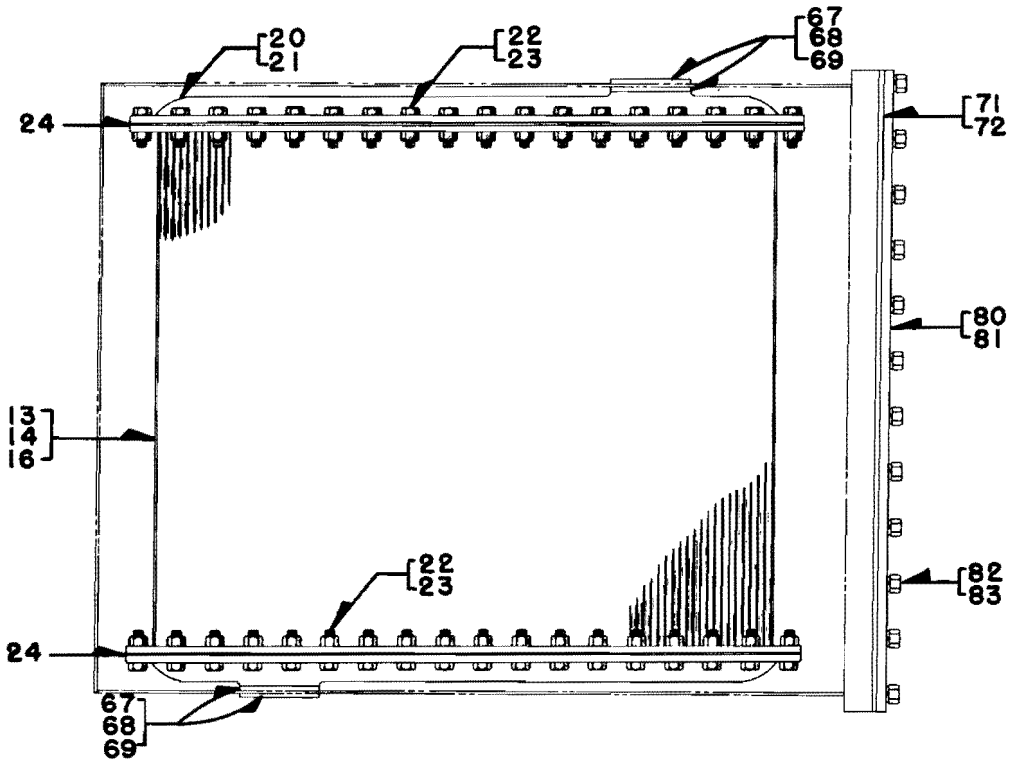

Ref. Nos. 1, 2 and 3

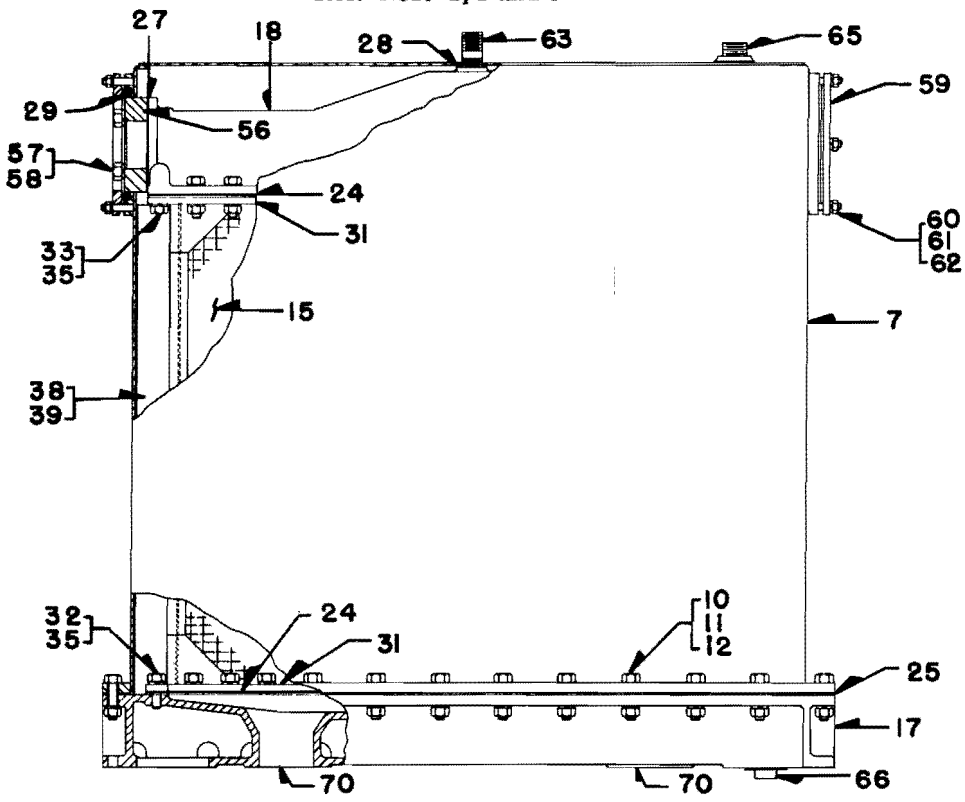

Ref. No. 4

PLATE F927-1

P. L. No. L927

LUBE OIL COOLER

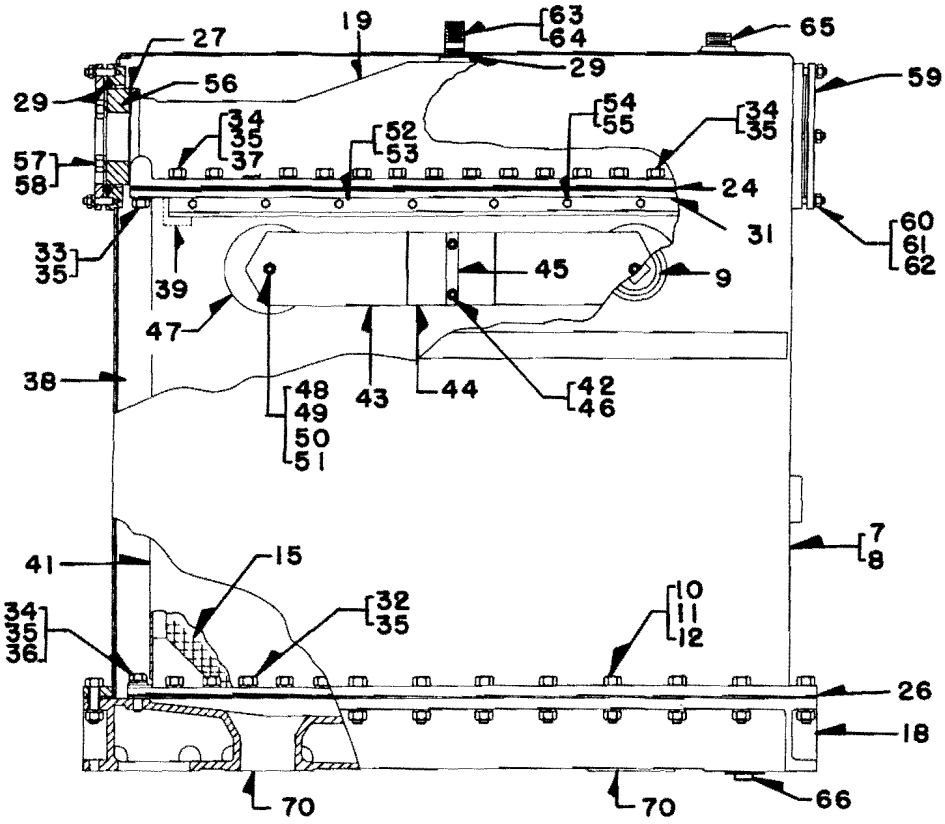

Ref. Nos. 5 and 6

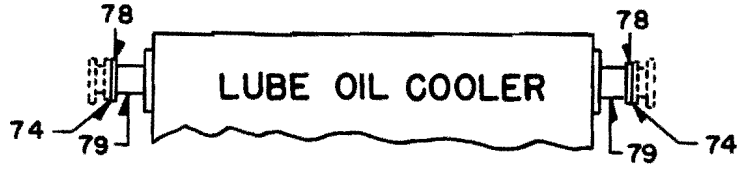

F2 and F3

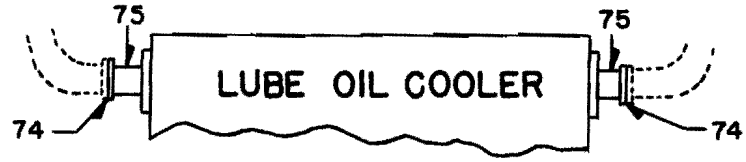

F7, FP7, F9, FP9 and FL9

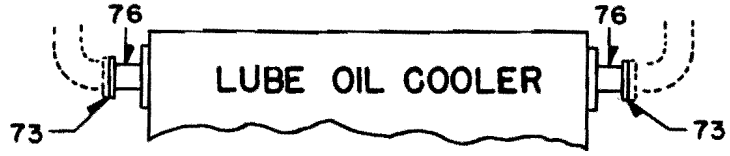

GP7 and GP9

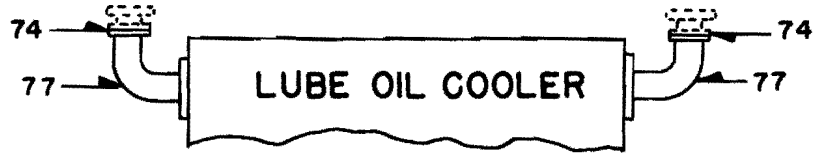

BL

PLATE F927-2

P. L. No. L927

LUBE OIL COOLER

LUBE OIL COOLER MOUNTING ASSEMBLY
SW1 LOCOMOTIVE

PLATE G927-3

Ref. No.	Part Number	No. Req.		Description
1	- - - -	A	-	SW1 Locomotives with lube oil tank and filter as separate units
2	- - - -	-	B	SW1 Locomotives with combined lube oil tank and filter
3	8518711	1	1	CORE ASSEMBLY .. Oil cooler
4	3112316	44	44	STUD .. Oil cooler core
* 5	8206930	400	400	INSERT .. Tube
6	8102909	1	1	PLATE .. End - Bottom
7	8022246	1	1	GASKET .. End plate - Bottom
8	8022248	2	2	STUD .. Core to end plate - 1/2 x 4-3/8 in. long
9	103323	48	48	WASHER .. Lock - 1/2
10	102637	48	48	NUT .. 1/2-13 hex.
11	8022249	3	3	STUD .. Bottom end plate - 1/2 x 4 in. long
12	8090716	23	23	STUD .. Bottom end plate - 1/2 x 2 in. long
13	103877	1	1	PLUG .. Pipe - Square socket - 1/8
14	8102910	1	1	PLATE .. End - Top
15	8020929	1	1	GASKET .. End plate
16	135629	26	26	WASHER .. Lock - 1/2
17	120378	26	26	NUT .. 1/2-13 - Hex.
18	8055089	-	1	ELBOW .. Flanged - 1-1/2 I. P. T.
19	8024423	1	-	TEE .. Flanged - 1-1/4 x 1-1/2 x 2-1/8 I. D. - Brass
20	8022251	1	1	GASKET .. End plate to flanged elbow or tee
21	8112531	1	1	NIPPLE .. Pipe - 1-1/2 P. T. x 11 in. long
22	8116677	1	-	NIPPLE .. Pipe - 1-1/2 P. T. x 11-1/4 in. long
23	8022252	4	4	STUD .. Tee and elbow mounting - 1/2-13 x 2-1/4 in. long
24	8024444	1	1	BOX .. Stuffing
25	8024448	1	1	PACKING .. Stuffing box
26	8024449	1	1	GLAND .. Packing
27	8022256	4	2	STUD .. Stuffing box - 3/8-16 x 1-5/8 in. long
28	103321	40	38	WASHER .. Lock - 3/8
29	102635	4	2	NUT .. 3/8-16 hex.
30	8024453	2	1	COVER .. Hand hole
31	8024454	2	2	GASKET .. Hand hole cover to water tank
32	179837	36	36	BOLT .. 3/8-16 x 3/4 hex. head
33	8024450	1	-	BOX .. Stuffing
34	8024451	1	-	PACKING .. Stuffing box
35	8024452	1	-	GLAND .. Packing
36	8034273	-	1	PLATE .. Cover
37	8022305	1	1	GASKET .. Bottom end plate flange

8024446 - 8055055

P. L. No. L927

LUBE OIL COOLER
SW1 LOCOMOTIVE

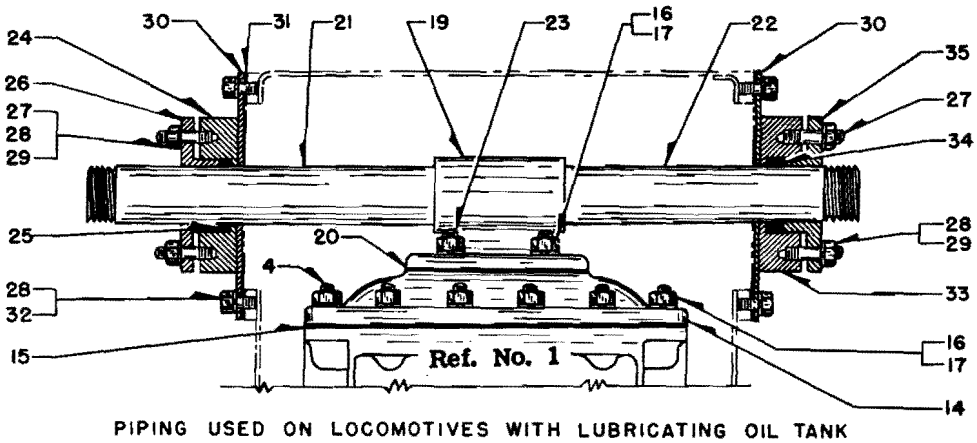

PIPING USED ON LOCOMOTIVES WITH LUBRICATING OIL TANK AND OIL FILTER AS SEPARATE UNITS

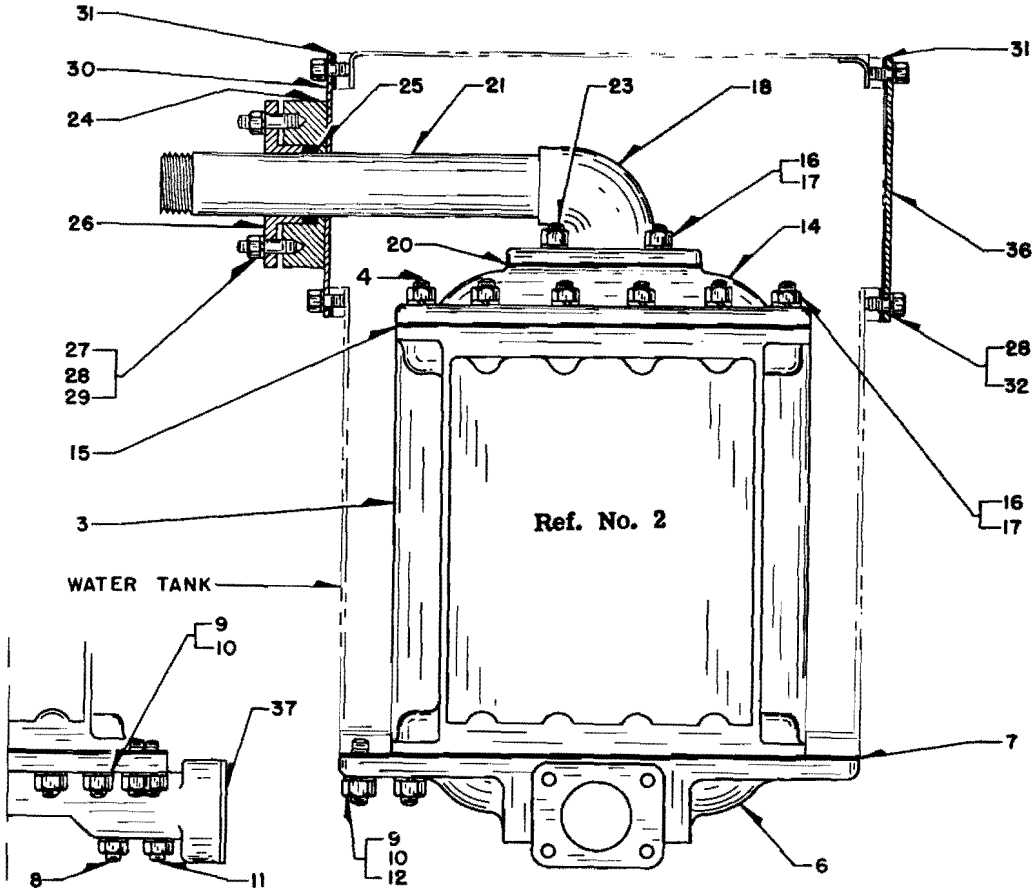

PIPING USED ON LOCOMOTIVES WITH COMBINATION LUBRICATING OIL TANK AND FILTER

PLATE G927-3

P. L. No. L927

LUBE OIL COOLER
E3, E4, E5, E6, LOCOMOTIVES

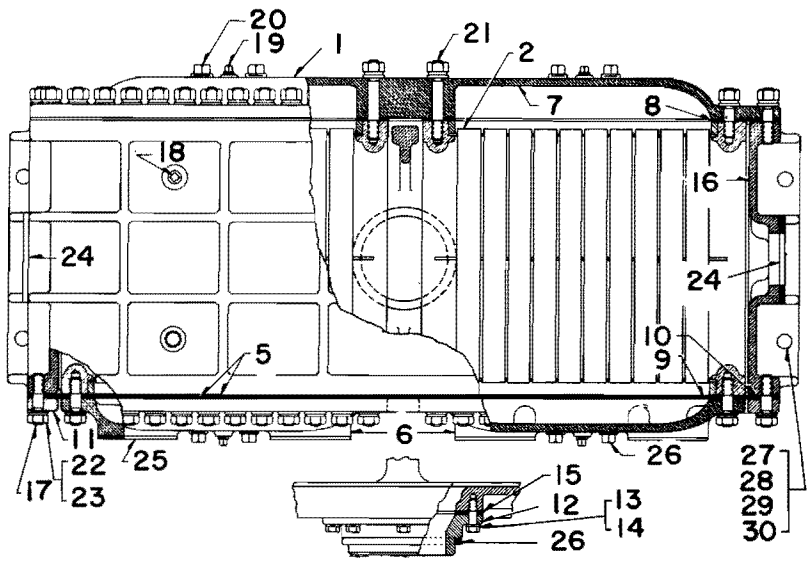

PLATE G927-4

Ref. No.	Part Number	No. Req.	Description
1	8035790	1	COOLER ASSEMBLY .. Lube oil
2	8518711	2	CORE .. Lube oil cooler
3	3112316	88	STUD .. Core mounting - 1/2-13 x 2-1/4 in. long
4	8206930	800	INSERT .. Tube - .2985 O.D. x 12-13/16 in. lg.
5	8020929	4	GASKET .. Core to end plate
6	8035613	2	PLATE .. End - Small
7	8035956	1	PLATE .. End - Large
8	8035968	1	GASKET .. End plate to housing
9	8035982	1	PLATE .. Separator
10	8035987	2	GASKET .. Ring to housing
11	8038806	1	RING .. Housing
12	8038815	1	HOUSING .. Water outlet
13	179841	8	BOLT .. 3/8-16 x 1-1/4 hex. head
14	103321	8	WASHER .. Lock - 3/8
15	8038814	1	GASKET .. Water outlet
16	8067212	1	HOUSING .. Cooler
17	8038811	80	STUD .. 1/2-13 x 2-1/2 in. long
18	103878	2	PLUG .. Pipe - 1/4 in. sq. head
19	103877	4	PLUG .. Pipe - 1/8 in. sq. head
20	103880	8	PLUG .. Pipe - 1/2 in. sq. head
21	8038812	8	STUD .. Core to large end plate - 1/2-13 x 3-5/8 in. long
22	102637	168	NUT .. 1/2-13 hex.
23	114608	168	WASHER .. Lock - 1/2 in. - External tooth
24	8022296	2	GASKET .. Water connection
25	8047991	4	GASKET .. Oil connection
26	8032593	2	RING .. Seal - Water outlet to water tank
27	271562	4	BOLT .. Cooler mounting -5/8-11 x 2 hex. head
28	102639	4	NUT .. 5/8-11 hex.
29	103345	4	WASHER .. Plain - 5/8
30	103325	4	WASHER .. Lock - 5/8

P. L. No. L927

LUBE OIL COOLER
NW2, NW5, TR, TR2, TR3, TR4, SW7 LOCOMOTIVES

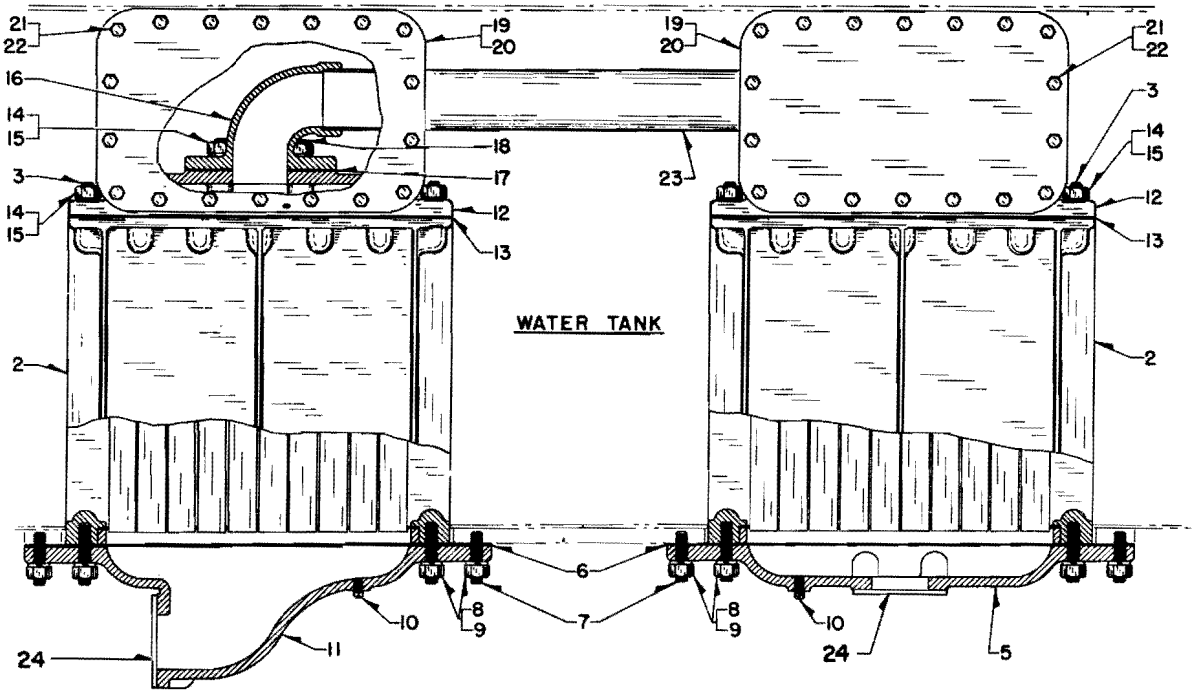

PLATE G927-5

Ref. No.	Part Number	No. Req.	Description
1	- - - -	1	COOLER ASSEMBLY .. Lube oil
2	8518711	2	CORE .. Lube oil cooler
3	3112316	88	STUD .. Lube oil cooler - 1/2-13 x 2-1/4 in. long
* 4	8206930	800	INSERT .. Tube - .2985 O.D. x 12-13/16 in. lg.
5	8034234	1	PLATE .. End - Bottom
6	8022246	2	GASKET .. End plate bottom
7	8015805	52	STUD .. End plate tank - 1/2-13 x 2 in. long
8	103323	96	WASHER .. Lock - 1/2
9	102637	96	NUT .. 1/2-13 hex.
10	103877	2	PLUG .. Pipe - 1/8 sq. head
11	8029892	1	PLATE .. End - Bottom
12	8102910	2	PLATE .. End - Top
13	8020929	2	GASKET .. End plate top
14	135629	52	WASHER .. Lock - 1/2 in. ext. tooth
15	120378	52	NUT .. 1/2-13 hex. - Cad. plated
16	8034195	2	ELBOW .. Flanged - 2 I.D. T.
17	8022251	2	GASKET .. End plate to flanged elbow
18	8022252	8	STUD .. Top end plate to elbow - 1/2-13 x 2-1/4 in. long
19	8034273	4	COVER .. Hand hole
20	8024454	4	GASKET .. Hand hole cover
21	179838	72	BOLT .. 3/8-16 x 7/8 hex. head
22	103321	72	WASHER .. Lock - 3/8
23	8122502	A. R.	TUBING .. 2 in. I.P.S. x .095 Wall copper - 20-1/2 in. req'd.
24	8015648	2	GASKET .. Inlet and outlet

8034221

P. L. No. L927

LUBE OIL COOLER
FT and TR1 LOCOMOTIVE

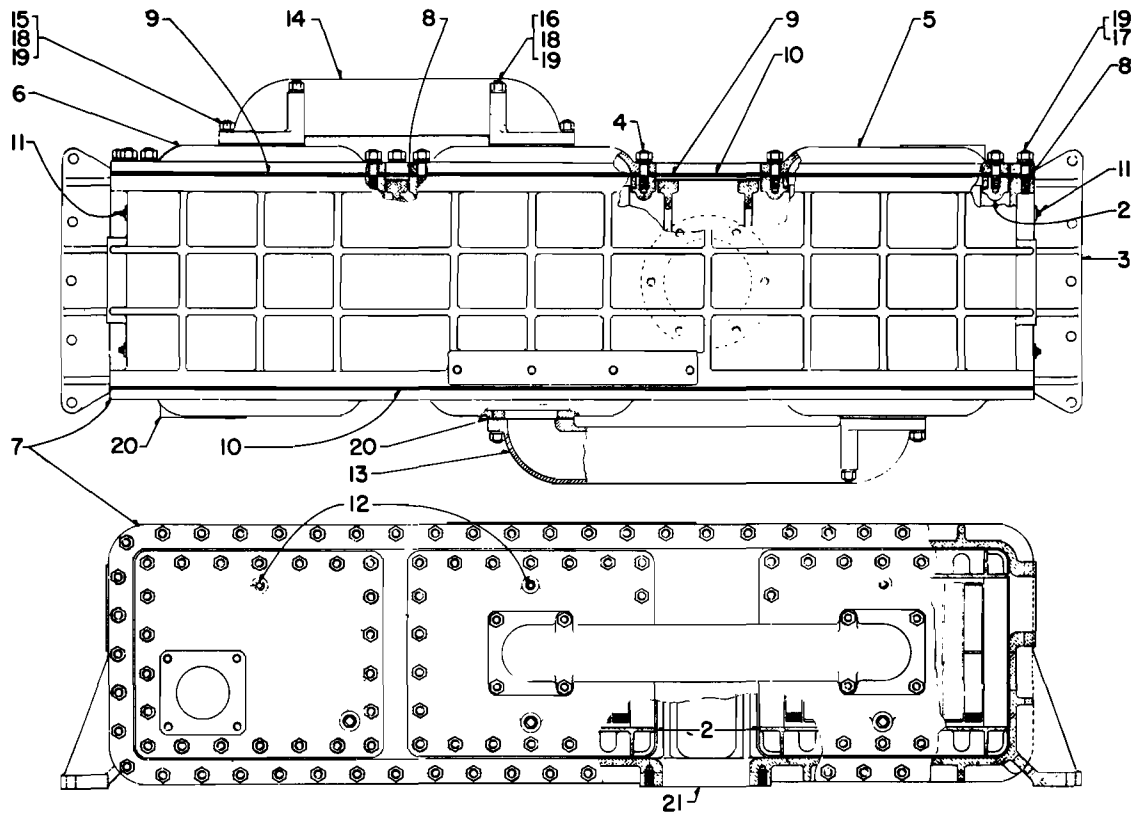

PLATE G927-6

Ref. No.	Part Number	No. Req.	Description
1	8041728	1	COOLER ASSEMBLY .. Lube oil
2	8518711	3	CORE .. Lube oil cooler
3	8062199	1	HOUSING ASSEMBLY .. Lube oil cooler
4	8038811	116	STUD .. Cooler housing - 1/2-13 x 2-1/2 in. long
5	8042366	2	PLATE .. End - Off center inlet
6	8042365	4	PLATE .. End - Center inlet
7	8042388	2	RING .. Housing
8	8020929	12	GASKET .. Separator plate to core and end plate
9	8042387	4	GASKET .. Housing ring to housing
10	8042374	2	PLATE .. Separator
11	103878	6	PLUG .. Pipe - 1/4 in.
12	103877	10	PLUG .. Pipe - 1/8 in.
13	8042385	1	MANIFOLD .. Long
14	8042384	1	MANIFOLD .. Short
15	8038811	8	STUD .. End plate to manifold - 1/2-13 x 2-1/2 in. long
16	8042389	8	STUD .. End plate to manifold - 1/2 x 5-1/8 in. long
17	120396	248	WASHER .. Plain - 1/2 in.
18	114608	264	WASHER .. Lock - 1/2 in. external tooth
19	102637	264	NUT .. Machine - 1/2-13 hex.
20	8352787	4	GASKET .. Manifold, Water inlet, Oil inlet and outlet.
21	8041746	1	GASKET .. Water outlet to water tank

LUBE OIL FILTER ELEMENT

Parts List No. D928

PLATE B928-1

Ref. No.	Part Number	Number Required				Description
ELEMENT . . Filter						
* 1	8054713	A	-	-	-	ELEMENT .. Filter - SW1, NW2, SW7, E3, E6 and E7 Locomotives - Rectangular tank filter
2	8035047	-	B	-	-	ELEMENT .. Filter - BL, FT, F2, F3, SW1 and NW2 Locomotives - Replaced by 8168621
NOTE 1: Filter element 8035047 may be converted to 8168621 element by application of Ref. No. 15, 16 and 17. Refer to Modification Instruction 5032.						
3	8168621	-	-	C	-	ELEMENT .. Filter - F7, FP7, F9, FP9, FL9, SW8, SW9, SW600, SW900, SW1200, GP, SD, E8 and E9 Locomotives - Replaces 8035047
NOTE 2: Major difference between filter elements 8054713, 8035047 and 8168621 is in the direction of discharge of filtered oil. 8054713 element has center tube open at both ends, discharging filtered oil out of the top. 8035047 and 8168621 elements have center tube closed at the top, discharging filtered oil out of the bottom.						
* 3A	8261050	-	-	-	D	ELEMENT .. Filter - Vented cover - SW600 Locomotives
SHELL ASSEMBLY . . Element						
* 3B	8191269	1	-	-	-	SHELL ASSEMBLY .. Element
* 3C	8168624	-	-	1	1	SHELL ASSEMBLY .. Element
CARTRIDGE . . Filter						
4	8262493	1	1	1	1	CARTRIDGE .. Filter - 100% white - Used with center tube Ref. No. 5 8281232 CARTRIDGE .. Filter - 50% colored - Optional
4A	8262492	1	1	1	1	CARTRIDGE .. Filter - 100% white - Used without center tube Ref. No. 5 8281231 CARTRIDGE .. Filter - 50% colored - Optional
5	8052879	1	1	1	1	TUBE ASSEMBLY .. Center - Includes screen
6	8060358	1	1	-	-	FELT .. 2 in. O.D. x 1/4 in. thick - No longer required
COVER . . Element						
7	8061110	1	1	-	-	RING .. Snap - Element cover
8	8062040	1	1	-	-	COVER .. Element
9	8052875	1	1	-	-	HANDLE .. Element
10	8168655	-	-	1	1	COVER .. Element
11	8168656	-	-	1	-	BOLT .. Wing - Element cover
*11A	8252176	-	-	-	1	SCREW ASSEMBLY .. Wing - Includes vent
WASTEX . . Filter						
*12	8062987	-	1	-	-	EXTENSION .. Center tube - No longer required due to redesign of element base
13	8032230	1	1	1	1	WASTEX .. Filter-7 pound package-Use only when hand packing
14	8069887	1	1	-	-	SCREEN .. Outside - Required only when hand packing large perforated type element with wastex
CONVERSION PARTS						
15	8168655	-	1	-	-	COVER .. Element
16	8168625	-	1	-	-	PLUG .. Center tube
17	8168656	-	1	-	-	BOLT .. Wing - Element cover

P. L. No. D928

LUBE OIL FILTER ELEMENT

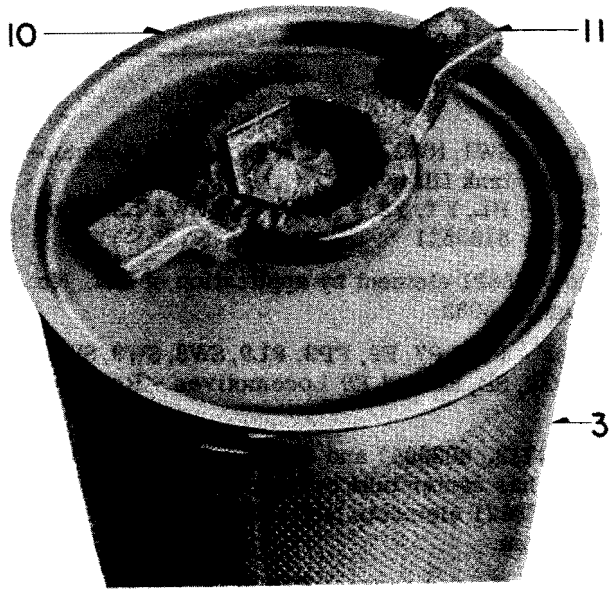

FILTER ELEMENT - 8168621

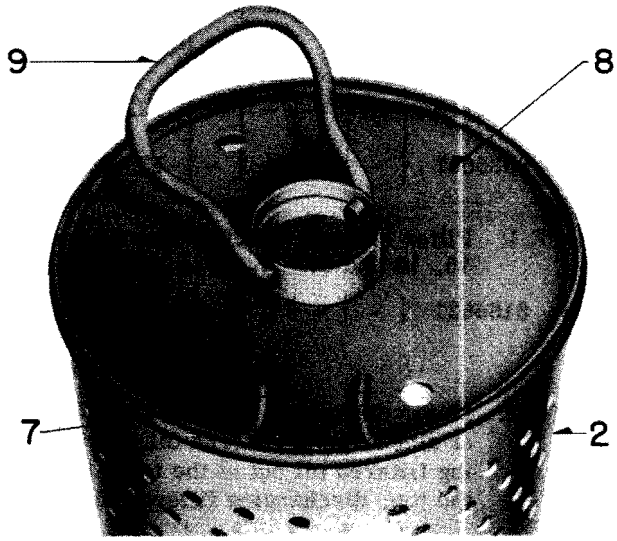

FILTER ELEMENT - 8035047

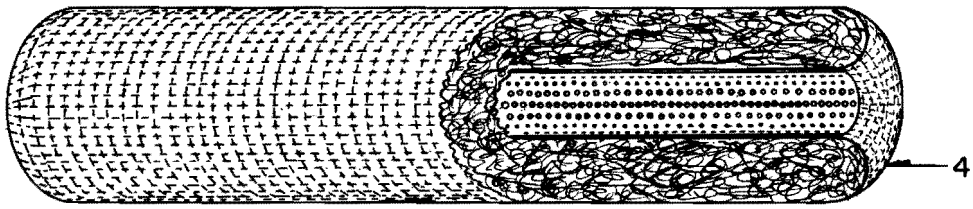

CUTAWAY VIEW OF REPLACEMENT CARTRIDGE

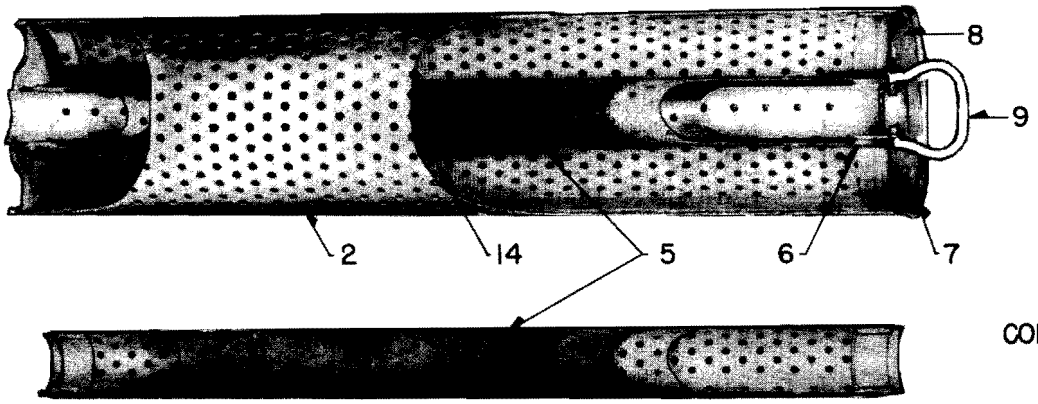

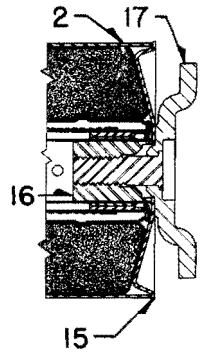

CONVERSION PARTS
SEE NOTE 1

CUTAWAY VIEW OF CENTER SCREEN ASSEMBLY

PLATE B928-1

LUBE OIL FILTER ELEMENTS

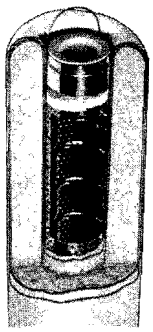

Ref. Nos. 1 and 6

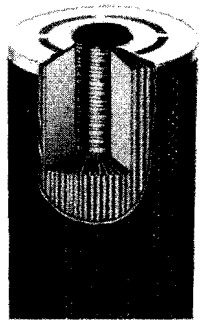

Ref. No. 2

PLATE D928-2

Ref. No.	Part Number	No. Req.	Description
1	8275432	-	CARTRIDGE .. Cageless waste - Optional with caged element 8168621 in circular filters with an inlet baffle - Four or seven element filter - Normally aspirated and turbocharged engines
2	8309800	-	CARTRIDGE .. Pleated paper - 5-1/2 in. O.D. - Locomotives with turbocharged engines. - Replaces 8286567
* 3	8314200	-	CARTRIDGE .. Pleated paper - 6-1/2 in. O.D. - Optional with 8309800 - Locomotives with turbocharged engines that require additional filter area
* 4	8319722	1	KIT .. Filter cartridge - Seven element filter - Locomotives with turbocharged engines
5	8275432	2	CARTRIDGE .. Cageless waste
* 6	8314200	5	CARTRIDGE .. Pleated paper - 6-1/2 in. O.D.

NOTE: It is recommended that locomotives with turbocharged engines operating with five paper and two cageless waste cartridges be converted from a 20 PSI by-pass to a 40 PSI by-pass to provide full flow filtration at low oil temperature. See Parts List 939 and Maintenance Instruction 926.

Parts List No. A933

LUBE OIL SYSTEM GASKETS

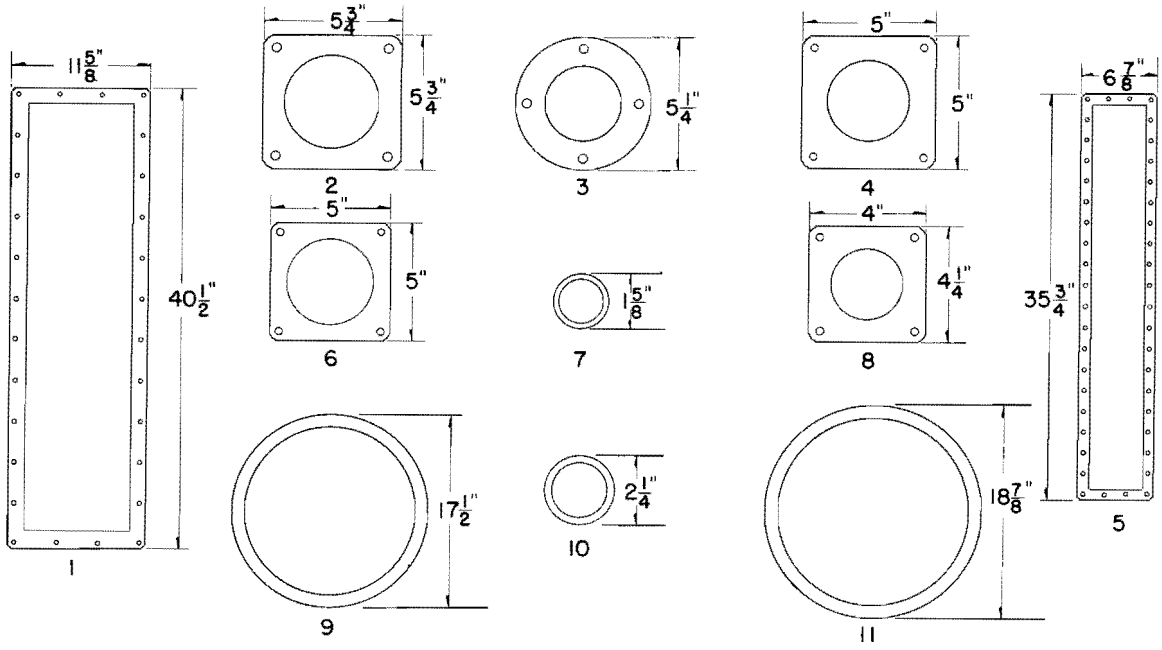

PLATE A933-1

Ref. No.	Part Number	No. Req.	Description
1	8080343	1	GASKET .. Lube oil cooler tank to header (3 /32 Inch thick)
2	8080947	1	GASKET .. 4 Inch flange - Oil return elbow to strainer case (1/16 Inch thick)
3	8080293	2	GASKET .. 3 Inch flange - Radiator header to pipe flange (1/16 Inch thick)
4	8038897	2	GASKET .. 3 Inch flange - 3 Inch flexible hose (1/16 Inch thick)
5	8018975	2	GASKET .. Flange - Radiator core (3/32 Inch thick)
6	8071587	2	GASKET .. 4 Inch flange - 4 Inch flexible metal hose (1/16 Inch thick)
7	8080346	1	GASKET .. Oil cooler header pipe nipple (1/8 Inch thick)
8	8029467	2	GASKET .. 2-9/16 Inch flange - Scavenging pump elbow (1/32 Inch thick)
9	8067196	1	GASKET .. Oil by-pass relief valve body (5/8 Inch thick)
10	8067203	5	GASKET .. Oil by-pass relief valve (3 /32 Inch thick)
11	8075964	1	GASKET .. Lube oil filter shell cover (1/16 Inch thick)

Parts List No. E935

LUBE OIL GAUGE

Lube Oil Pressure and Suction Gauge

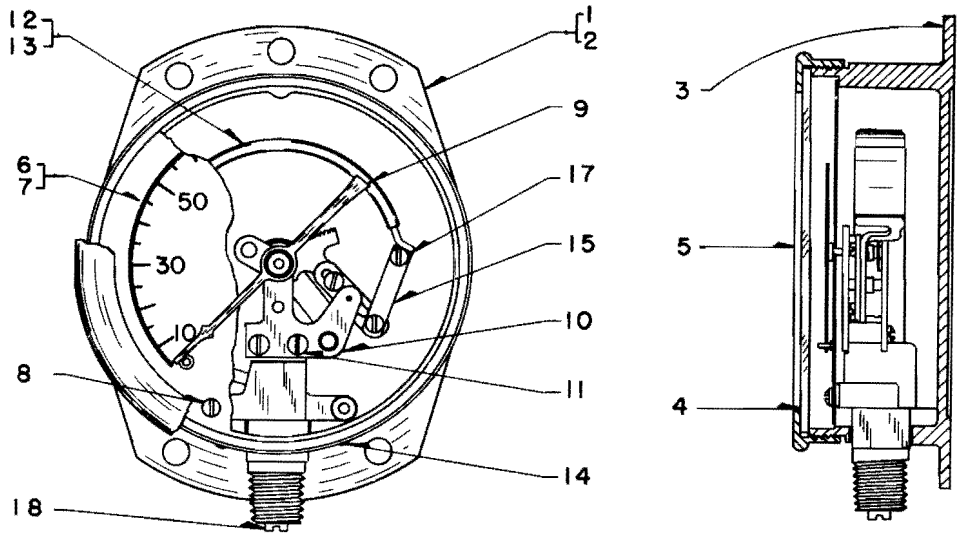

PLATE B935-1

Ref. No.	Part Number	No. Req.		Description
GAUGE . . Lube Oil - Pressure and Suction				
1	8032123	A	-	GAUGE . . Lube oil pressure - 0-100 lb. - 3-1/2 in. dial.
2	8098757	-	B	GAUGE . . Lube oil suction - 0-30 in. vacuum - 3-1/2 in. dial.
CASE . . Gauge				
3	8140927	1	1	CASE . . Gauge
4	8035750	1	1	GLASS . . Gauge
5	8140930	1	1	RING . . Gauge glass mounting
DIAL . . Gauge				
6	8048270	1	-	DIAL . . Gauge - Lube oil pressure
7	8171753	-	1	DIAL . . Gauge - Lube oil suction
8	224486	2	2	SCREW . . Mounting - Dial - No. 3-56 x 1/8 fil. hd.
POINTER ASSEMBLY . . Gauge				
9	8140929	1	1	POINTER ASSEMBLY . . Gauge
MOVEMENT ASSEMBLY . . Gauge				
10	8050623	1	1	MOVEMENT ASSEMBLY . . Gauge
11	133359	2	2	SCREW . . Movement - No. 4-40 x 3/16 flat hd. slotted
12	8035747	1	-	SOCKET ASSEMBLY . . Gauge - Lube oil pressure
13	8189728	-	1	SYSTEM ASSEMBLY . . Gauge - Lube oil suction
14	132969	2	2	SCREW . . Socket - No. 12-24 x 3/8 rd. hd.
15	8039946	A. R.		LINK . . Connection - 11/16 in. lg. - See Note
*16	8035756	A. R.		LINK . . Connection - 7/16 in. lg. - See Note

NOTE: One connection link required per gauge. Correct link to use can only be determined at assembly.

17	8054980	2	2	SCREW . . Connection - No. 3-56 x . 078 fil. hd.
18	8164348	1	1	SCREW . . Throttle

P. L. No. E935

LUBE OIL GAUGE
Lube Oil Pressure Gauge

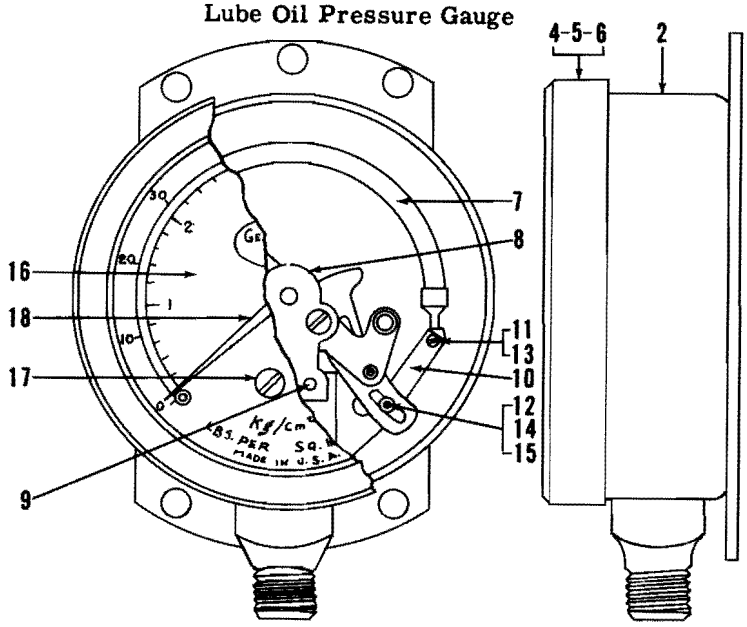

Ref. No. 1
PLATE D935-2

Ref. No.	Part Number	No. Req.		Description
GAUGE . . Lube Oil Pressure				
1	8232099	A	-	GAUGE . . Lube oil pressure - 0 to 100 lbs. and 0 to 7Kg/Cm^2
1	8231594	-	B	GAUGE . . Lube oil pressure - 0 to 160 lbs. and 0 to 11Kg/Cm^2
CASE . . Gauge				
2	8238594	1	1	CASE . . Gauge
* 3	8238597	2	2	SCREW . . Case mounting
4	8222119	1	1	RING . . Threaded
5	8222120	1	1	GLASS . . Gauge
6	8222121	1	1	GASKET . . Gauge glass
7	8248972	1	-	SOCKET ASSEMBLY . . Includes bourdon tube
7	8258068	-	1	SOCKET ASSEMBLY . . Includes bourdon tube
7	8238599	1	1	GASKET . . Socket
MOVEMENT ASSEMBLY . . Gauge				
8	8248971	1	1	MOVEMENT ASSEMBLY . . Gauge
9	8238096	2	2	STUD . . Movement mounting
10	8238596	1	1	LINK
11	8238095	1	1	SCREW . . Link - Segment
12	8238094	1	1	SCREW . . Link - End piece
13	8222129	1	1	NUT . . Sliding
14	8238598	1	1	NUT . . End piece
15	8222142	1	1	WASHER
DIAL ASSEMBLY . . Gauge				
16	8248970	1	-	DIAL ASSEMBLY . . Includes stop pin
16	8258067	-	1	DIAL ASSEMBLY . . Includes stop pin
17	8222130	2	2	SCREW . . Dial
18	8222125	1	1	POINTER ASSEMBLY . . White

LUBE OIL GAUGE
Lube Oil Pressure Gauge

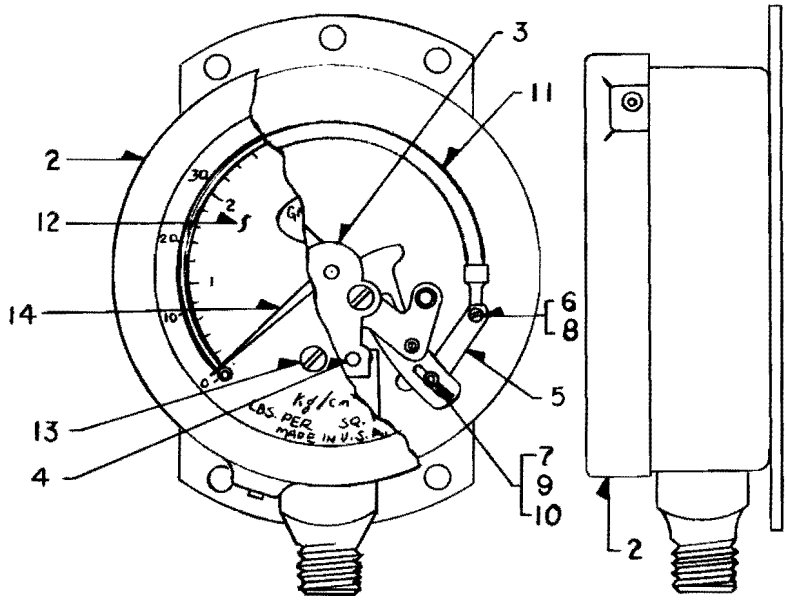

Ref. No. 1
PLATE D935-3

Ref. No.	Part Number	No. Req.	Description
GAUGE . . Lube Oil Pressure			
1	8265663	X	GAUGE . . Lube oil pressure - 0 to 100 lbs. - 0 to 7 Kg/Cm^2
RING ASSEMBLY . . Gauge Glass			
2	8218701	1	RING ASSEMBLY . . Gauge glass - Includes glass and plexiglass cemented to ring
MOVEMENT ASSEMBLY . . Gauge			
3	8248971	1	MOVEMENT ASSEMBLY . . Gauge
4	8238096	2	STUD . . Movement mounting
5	8238596	1	LINK . . Connecting
6	8238095	1	SCREW . . Link - Segment
7	8238094	1	SCREW . . Link - End piece
8	8222129	1	NUT . . Sliding
9	8238598	1	NUT . . End piece
10	8222142	1	WASHER . . Link
11	8248972	1	SOCKET ASSEMBLY
*11A	8238599	1	GASKET . . Socket
DIAL ASSEMBLY . . Gauge			
12	8248970	1	DIAL ASSEMBLY . . Includes stop pin
13	8222130	2	SCREW . . Dial
14	8222125	1	POINTER ASSEMBLY . . White

LUBE OIL VENT

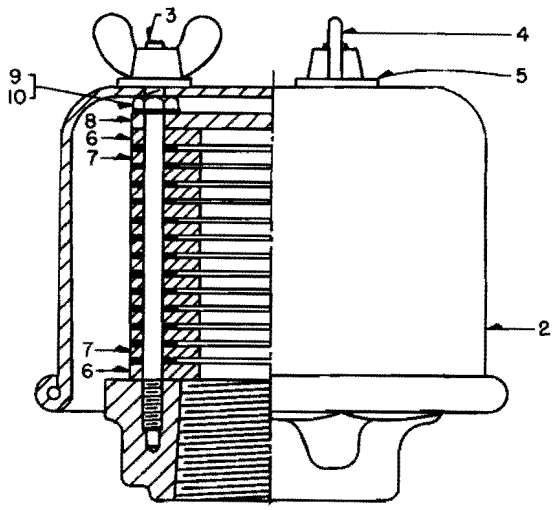

Ref. No. 1

PLATE A937-1

Ref. No.	Part Number	No. Req.	Description
1	8004075	X	VENT ASY. .. Lube oil - 1 P.T.
2	8192326	1	COVER .. Vent
3	8192327	3	STUD .. Plate retaining - 10-24
4	144233	3	NUT .. Wing - 10-24
5	120391	3	WASHER .. Plain - Wing nut spacer - No. 10
6	8192328	7	PLATE .. Flat - 1 in. diameter center hole
7	8192330	7	PLATE .. Flat - Embossed - 1 in. diameter center hole
8	8192329	1	PLATE .. Top
9	8192702	3	SPACER .. Nut
10	120361	3	NUT .. 10-24 hex.

Parts List No. B939

LUBE OIL FILTER

Seven Element Internal By-Pass Valve

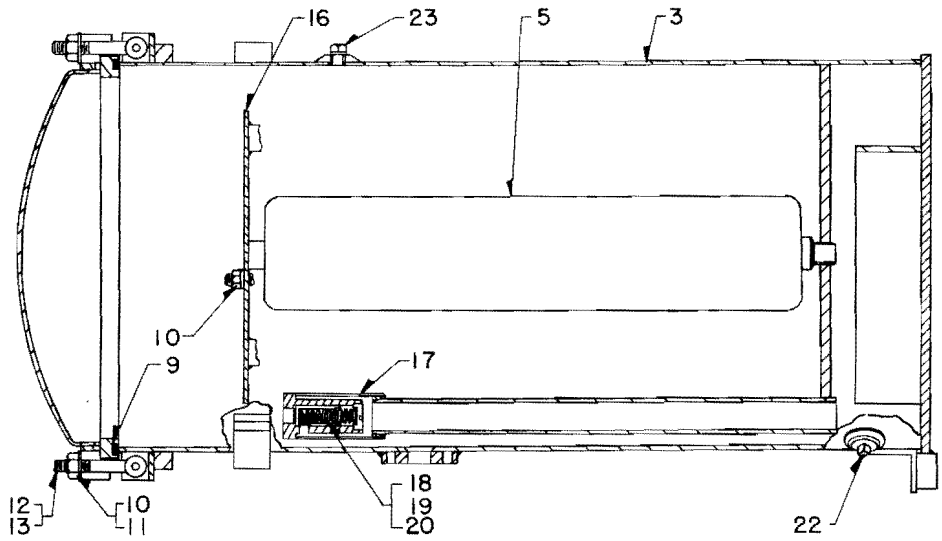

PLATE B939-1

Ref. No.	Part Number	Number Required				Description
* 1	8272268	A	-	-	-	FILTER .. Lube oil - GP18, GP20, SD24-Replaced by 8291379
* 2	8268594	-	B	-	-	FILTER .. Lube oil - F7, F9
3	8271939	-	-	C	-	FILTER .. Lube oil - GP18, SD18-Replaced by 8285044
* 4	8290029	-	-	-	D	FILTER .. Lube oil - GP20, SD24-Replaced by 8291381
5	8275432	-	7	7	2	CARTRIDGE .. Filter - Cageless waste
* 6	8309800	-	-	-	5	CARTRIDGE .. Filter - Pleated paper - 5-1/2 O. D.
* 7	8168621	7	-	-	-	ELEMENT .. Filter - Optional with Item 5 - See P. L. 928
* 8	8262493	7	-	-	-	CARTRIDGE .. Filter

The following items apply to all filter assemblies, Column A, B, C and D.

9	8268756	1	GASKET .. Cover
10	220081	13	NUT .. Cover to eye bolt - 3/4-10 hex.
11	8291707	10	WASHER .. Plain
12	8291706	10	BOLT .. Eye - 3/4-10 thread - 4 in. long
13	8291708	10	PIN ASSEMBLY .. Clevis - Includes cotter pin
*14	8098236	1	PIN .. Cover hinge
*15	137218	2	PIN .. Cotter - Cover hinge pin - 5/32 x 1-1/4 long
16	8291709	1	PLATE .. Hold down
17	8277458	5	VALVE ASSEMBLY .. By-pass
18	8067194	5	PLUG .. Headless slotted - 1-5/8 -16
19	8035259	5	PISTON .. Relief valve
20	8035263	5	SPRING .. Relief valve - 20 lb. - Use with normally aspirated engines
*21	8282144	5	SPRING .. Relief valve - 40 lb. - Use with turbocharged engines
22	103882	1	PLUG .. Pipe - Drain - 1 M. P. T. square head
23	143981	1	PLUG .. Pipe - Vent - 1/2-14 square head

NOTE: It is recommended that locomotives with turbocharged engines operating with 5 paper and 2 cageless waste cartridges be converted from a 20 PSI by-pass to a 40 PSI by-pass to provide full flow filtration at low oil temperature. Conversion requires substitution of Item 21 for Item 20.

P. L. No. B939

LUBE OIL FILTER
Seven Element External By-Pass Valve
PLATE B939-2

Ref. No.	Part Number	Number Required				Description
FILTER ASSEMBLY . . Lube Oil						
* 1	8285044	A	-	-	-	FILTER .. Lube oil - GP18, SD18 - Replaced by 8319854
* 1A	8291379	-	B	-	-	FILTER .. Lube oil - GP18, SD18 - Replaced by 8319853
1B	8291381	-	-	C	-	FILTER .. Lube oil - GP20, SD24 - Replaced by 8319852
* 1C	8297873	-	-	-	D	FILTER .. Lube oil - F3, F7, F9
CARTRIDGE . . Lube Oil Filter						
2	8275432	7	-	2	7	CARTRIDGE .. Filter - Cageless waste
3	8309800	-	-	5	-	CARTRIDGE .. Filter - 5-1/2 O. D. pleated paper - Replaces 8286567
NOTE: Cartridge replacement kit 8319722 is available with a larger diameter pleated paper cartridge. This kit is interchangeable and consists of the following: 8314200 - 5 - Cartridge - 6-1/2 O. D. pleated paper 8275432 - 2 - Cartridge - Cageless waste						
* 3A	8168621	-	7	-	-	ELEMENT .. Filter - See P. L. 928
* 3B	8262493	-	7	-	-	CARTRIDGE .. Filter element
4	8032748	3	3	3	3	NUT .. Lock - Hold down rod - 3/4-10 hex.
5	8296023	3	3	3	3	ROD .. Hold down
6	8291709	1	1	1	1	PLATE .. Hold down
7	8296028	1	1	1	1	PLATE .. Retainer
8	8296151	1	1	1	1	GASKET .. Retainer plate
9	8268756	1	1	1	1	GASKET .. Cover
10	220081	10	10	10	10	NUT .. Cover to eye bolt - 3/4-10 hex.
11	8291707	10	10	10	10	WASHER .. Eye bolt
12	8291706	10	10	10	10	BOLT .. Eye - 3/4-10 thread - 4 in. long
13	8291708	10	10	10	10	PIN ASSEMBLY .. Clevis - Includes cotter pin
14	8098236	1	1	1	1	PIN .. Cover hinge
15	137218	2	2	2	2	PIN .. Cotter - Cover hinge pin - 5/32 in. x 1-1/4 long
VALVE ASSEMBLY . . By-Pass						
16	8312775	-	-	1	-	VALVE ASSEMBLY .. By-pass - 40 lb.
*16A	8296034	1	1	-	1	VALVE ASSEMBLY .. By-pass - 20 lb.
17	103723	1	1	1	1	PIN .. Dowel - 3/16 x 7/8 - Chamfered ends
18	8296026	1	1	1	1	KEEPER ASSEMBLY .. Spring
19	8296163	1	1	1	1	RING .. Retaining
20	8317190	-	-	1	-	SPRING .. Valve compression - 40 lb.
*20A	8296025	1	1	-	1	SPRING .. Valve compression - 20 lb.
21	132033	2	2	2	2	SCREW .. Machine - 10-24 x 3/8 fil. head
22	8296031	1	1	1	1	BODY .. Valve
23	8296032	1	1	1	1	VALVE .. Poppet
24	8296033	1	1	1	1	RETAINER .. Valve
PLATE ASSEMBLY . . Valve Port Cover						
25	8296029	1	1	1	1	PLATE ASSEMBLY .. Valve port cover
26	8296019	1	1	1	1	NUT .. Cap - 3/4-10 thread
27	8296150	1	1	1	1	SEAL .. Washer - Cap nut
28	8296021	1	1	1	1	SCREW .. Gauge rod adjusting
29	8296024	1	1	1	1	ROD .. Valve gauge
30	8296022	3	3	3	3	RING .. "O" - Valve gauge rod

P. L. No. B939

LUBE OIL FILTER

Ref. No.	Part Number	Number Required A	B	C	D	Description
		A	B	C	D	FILTER .. Lube oil
31	8316947	1	1	1	1	RING .. Snap - Valve gauge rod
32	179885	4	4	4	4	BOLT .. Cover plate to filter - 1/2-13 x 1-1/2 hex. head
33	8296030	1	1	1	1	GASKET .. Cover plate to filter
34	8216866	-	-	3	-	SPRING .. By-pass valve retaining - 40 lb.
*34A	8296020	3	3	-	3	SPRING .. By-pass valve retaining - 20 lb.
*35	103882	1	1	1	1	PLUG .. Pipe - Drain - 1 M. P. T. square head
*36	113182	1	1	1	1	PLUG .. Pipe - Clean out - 1-1/2 M. P. T. square head

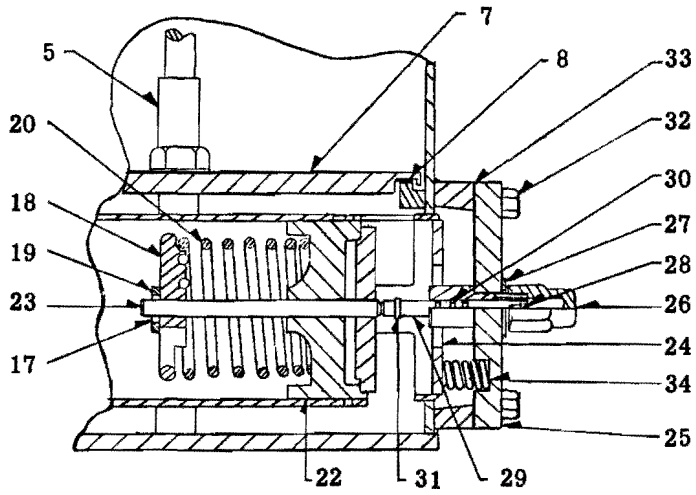

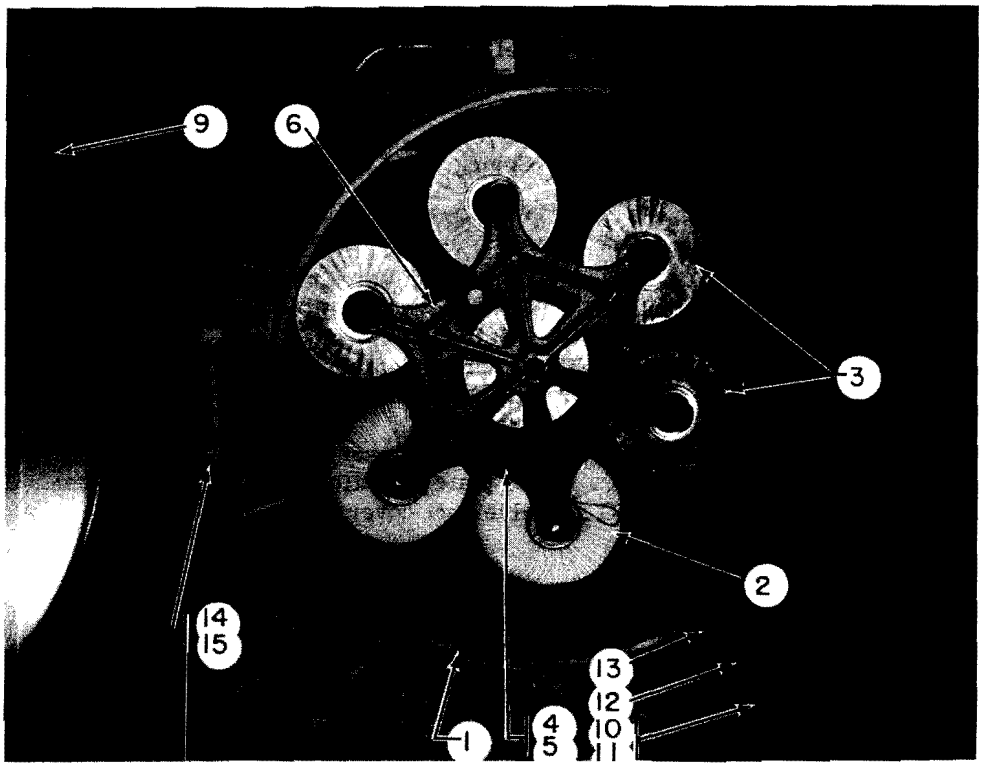

PLATE B939-2

P. L. No. B939

LUBE OIL FILTER
Seven Element External By-Pass Valve
Locomotives With Normally Aspirated Engines

PLATE B939-3

Ref. No.	Part Number	Number Required A	Number Required B	Description
FILTER ASSEMBLY . . Lube Oil				
1	8319853	A	-	FILTER .. Lube oil - GP18, SD18 - Caged type element
1A	8319854	-	B	FILTER .. Lube oil - GP18, SD18 - Cageless waste cartridge
CARTRIDGE . . Filter				
2	8275432	-	7	CARTRIDGE .. Cageless waste
* 3	8168621	7	-	ELEMENT .. Filter
* 3A	8262493	7	-	CARTRIDGE .. Filter - See P. L. 928
4	8320707	7	7	SPRING .. Hold down
The following items apply to both filter assemblies, Columns A and B.				
5	8268756	1		GASKET .. Cover
6	220081	10		NUT .. Cover to eye bolt - 3/4-10 hex.
7	8291707	10		WASHER .. Eye bolt
8	8291706	10		BOLT .. Eye - 3/4-10 thread - 4 in. long
9	8291708	10		PIN ASSEMBLY .. Clevis - Includes cotter pin
10	8098236	1		PIN .. Cover hinge
11	187988	2		PIN .. Cotter - Cover hinge pin - 3/16 x 1-1/4 long
*12	8320706	1		PIN .. Dowel - Cover locating - 1/2 x 2-3/4
VALVE ASSEMBLY . . By-Pass				
13	8321235	1		VALVE ASSEMBLY .. By-pass - 20 lb.
14	8322842	1		PIN .. Dowel - 3/16 x 7/8
15	8296027	1		KEEPER ASSEMBLY .. Spring
16	8296025	1		SPRING .. Valve compression - 20 lb.
17	8322840	1		BODY .. Valve
18	8322841	3		GUIDE .. Spring - 1/4 dia. x 5-1/4 long
PLATE ASSEMBLY . . Valve Port Cover				
19	8320704	1		COVER ASSEMBLY .. Valve port
20	8296022	1		RING .. "O" - Valve gauge rod
21	8322877	1		SPRING .. Valve retaining
22	8322874	1		WASHER .. Spring retaining
23	8316947	1		RING .. Snap - Retaining washer
24	8322876	1		ROD .. Gauge
25	8296030	1		GASKET .. Valve port cover plate
26	179885	4		BOLT .. Cover plate mounting - 1/2-13 x 1-1/2 hex. head
*27	8320708	3		SPRING .. Valve port cover plate
PLUGS . . Drain and Vent				
28	103882	1		PLUG .. Pipe - Drain - 1 M. P. T. square head
*29	143981	1		PLUG .. Pipe - Vent - 1/2 square head

P. L. No. B939

LUBE OIL FILTER

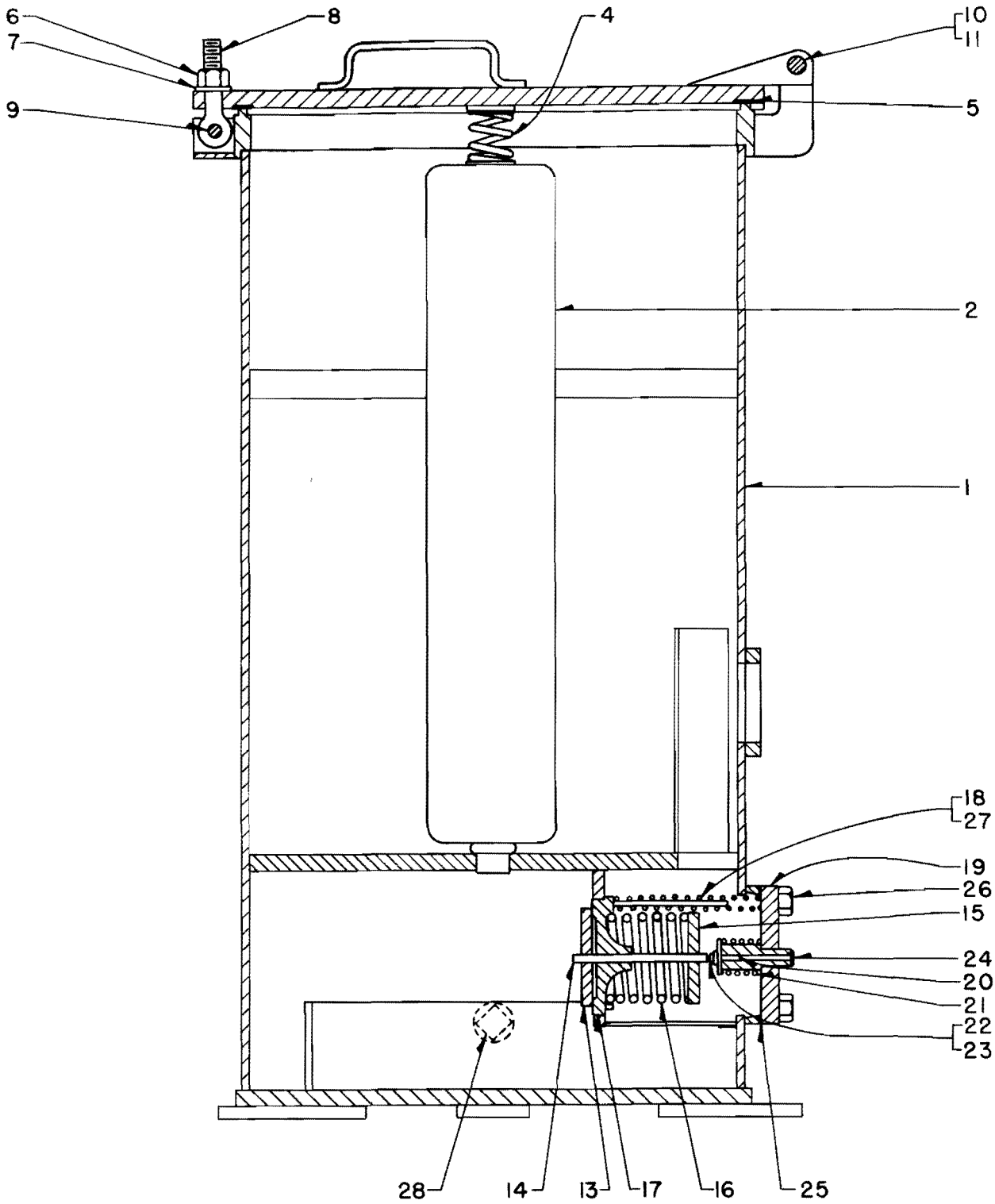

PLATE B939-3

P. L. No. B939

LUBE OIL FILTER

Seven Element Single By-Pass Valve
Locomotives With Turbocharged Engines
PLATE B939-4

Ref. No.	Part Number	No. Req.	Description
FILTER ASSEMBLY . . Lube Oil			
1	8319852	1	FILTER .. Lube oil - With two (2) cageless type filter cartridges and five (5) pleated paper filter cartridges - GP20, SD24
CARTRIDGE . . Lube Oil Filter			
* 1A	8319722	1	KIT .. Filter cartridge
2	8275432	2	CARTRIDGE .. Filter - Cageless wastex
* 3	8314200	5	CARTRIDGE .. Filter - Pleated paper - 6-1/2 O. D.
4	8320707	7	SPRING ASSEMBLY .. Hold down
GASKET . . Cover			
5	8268756	1	GASKET .. Cover
6	220081	10	NUT .. Cover to eye bolt - 3/4-10 hex.
7	8291707	10	WASHER .. Eye bolt
8	8291706	10	BOLT .. Eye - 3/4-10 thread - 4 in. long
9	8291708	10	PIN ASSEMBLY .. Clevis - Includes cotter pin
10	8098236	1	PIN .. Cover hinge
11	187988	2	PIN .. Cotter - 3/16 x 1-1/4 long
*12	8320706	1	PIN .. Dowel - Cover locating - 1/2 x 2-3/4
VALVE ASSEMBLY . . By-Pass			
13	8320705	1	VALVE ASSEMBLY .. By-pass - 40 lb.
14	8322842	1	PIN .. Dowel - 3/16 x 7/8
15	8296027	1	KEEPER ASSEMBLY .. Spring
16	8317190	1	SPRING .. Valve compression - 40 lb.
17	8322840	1	BODY .. Valve
18	8322841	3	GUIDE .. Spring - 1/4 dia. x 5-1/4 long
PLATE ASSEMBLY . . Valve Port Cover			
19	8320704	1	COVER ASSEMBLY .. Valve port
20	8296022	1	RING .. "O" - Valve gauge rod
21	8322877	1	SPRING .. Valve retaining
22	8322874	1	WASHER .. Spring retaining
23	8316947	1	RING .. Snap - Retaining washer
24	8322876	1	ROD .. Gauge
25	8296030	1	GASKET .. Valve port cover plate
26	179885	4	BOLT .. Valve port cover - 1/2-13 x 1-1/2 hex. head
*27	8320708	3	SPRING .. Valve port cover plate
PLUGS . . Drain and Vent			
28	103882	1	PLUG .. Pipe - Drain - 1 M. P. T. square head
*29	143981	1	PLUG .. Pipe - Vent - 1/2 square head

P. L. No. B939

LUBE OIL FILTER

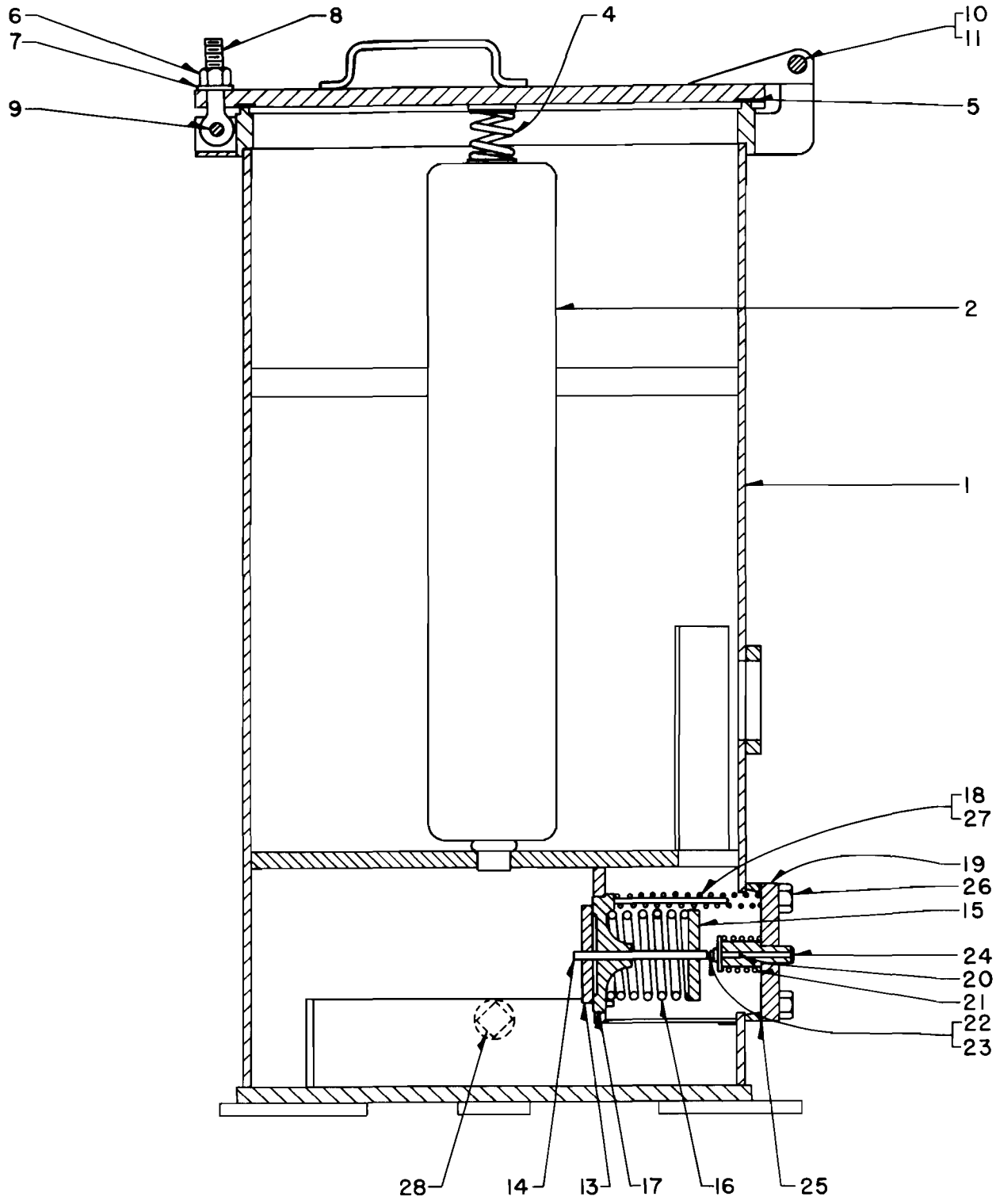

PLATE B939-4

Parts List No. A995

SOAK BACK PUMP LUBE OIL SYSTEM

Soak Back Pump Mounting and Piping

PLATE A995-1

Ref. No.	Part Number	No. Req.	Description
PUMP ASSEMBLY . . Soak Back			
1	8152343	1	PUMP ASSEMBLY .. Soak back - See P. L. 4110
2	179843	4	BOLT .. Pump mounting - 3/8-16 x 1-1/2 hex. hd.
3	8032743	4	NUT .. Lock - 3/8-16 hex.
4	8265246	1	GUARD .. Soak back pump
* 5	179833	4	BOLT .. Guard mounting - 3/8-16 x 1/2 hex. hd.
* 6	103321	4	WASHER .. Lock - 3/8
PIPING . . Soak Back Pump			
7	8116751	A. R.	PIPE .. 1/2 in. wrought steel - 20 ft. - Approx. 5 ft. required
8	8116885	A. R.	PIPE .. 1/2 in. brass - 12 ft. - Approx. 5 in. required
9	8116858	A. R.	TUBING .. .840 O. D. x .072 wall copper - 20 ft. - Approx. 3 ft. required
10	8122034	A. R.	TUBING .. 5/8 O. D. x .035 wall steel - 20 ft. - Approx. 2-1/2 ft. required
11	8265131	1	TUBE .. Curved
12	8275087	1	TUBE .. Curved
13	8265130	1	TUBE .. Curved
CLAMP ASSEMBLY . . Pipe and Tubing			
14	8168450	2	CLAMP ASSEMBLY .. 5/8 steel tube
15	8265245	2	CLIP .. Clamp mounting
16	179795	2	BOLT .. Clamp mounting
17	8035130	2	NUT .. Lock
18	8108196	2	CLAMP ASSEMBLY .. 1/2 pipe
19	8108197	1	CLAMP ASSEMBLY .. 1/2 pipe
20	8108209	1	CLAMP ASSEMBLY .. 5/8 tubing
FITTINGS . . Pipe and Tubing			
21	8131933	1	NIPPLE .. Short pipe - 1/2 M. P. T. x solder - Brass
22	8060973	1	NIPPLE .. Short pipe - 1/2 M. P. T.
23	8095640	1	ELBOW .. Pipe - 1/2 F. P. T. x 1/2 solder
24	8095165	1	ELBOW .. Pipe - 1/2 solder
25	8045942	1	ELBOW .. Union - 1/2 M. P. T. x 1/2 solder
26	8044168	1	ELBOW .. Union - 1/2 F. P. T.
27	9410442	1	ELBOW .. 5/8 tube x 1/2 F. P. T.
28	9410429	4	ELBOW .. 5/8 tube x 1/2 M. P. T.
29	8044160	1	UNION .. 1/2 F. P. T. x 1/2 M. P. T.
30	8050475	1	TEE .. 1/2 solder x 1/2 F. P. T. x 1/2 F. P. T.
31	9410377	3	CONNECTOR .. 5/8 tube x 1/2 M. P. T.
32	9410614	8	NUT .. 5/8 tube
33	274225	8	FERRULE .. 5/8 tubing
VALVES			
34	8270931	1	VALVE .. Check - 1/2 F. P. T.
35	8269314	1	VALVE .. Relief - 1/2 F. P. T.

8265244

P. L. No. A995

SOAK BACK PUMP LUBE OIL SYSTEM

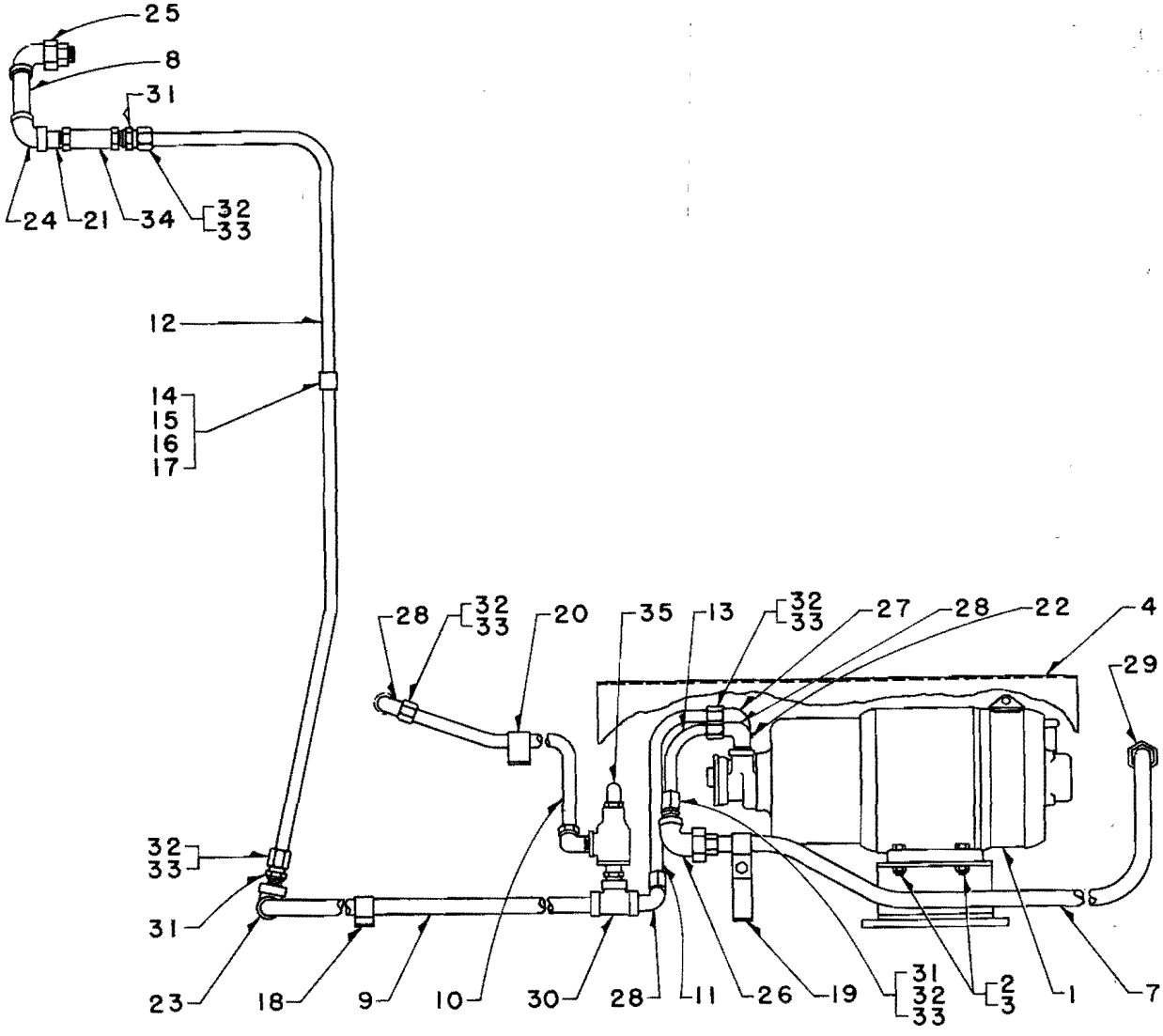

Soak Back Pump Mounting and Piping

PLATE A995-1

VOLUME ONE

MASTER PARTS CATALOG NO. 90

FREIGHT, PASSENGER AND SWITCHING LOCOMOTIVES

POWERED BY 6, 8, 12, 16-567-567A-567B-567C ENGINES

GENERAL MOTORS LOCOMOTIVES

ELECTRO-MOTIVE DIVISION
GENERAL MOTORS CORPORATION
LA GRANGE, ILLINOIS, U. S. A.

DATE ISSUED: MARCH, 1950 (REVISED FEBRUARY 1965)

LITHO IN U.S.A.

INDEX CAT. 90

	P. L. GROUP	SUBJECT
VOLUME ONE		TABLE OF CONTENTS—VOL. ONE
	300 400	ENGINE
		NUMERICAL INDEX—ENGINE
	500	COOLING SYSTEM
	700	FUEL OIL SYSTEM
	900	LUBE OIL SYSTEM
VOLUME TWO		TABLE OF CONTENTS—VOL. TWO
	1000	EQUIPMENT RACK
	1050	AIR SYSTEM
	1075	AIR REGULATOR
	1100	AIR COMPRESSOR
	1200	COOLING FAN, BELT DRIVE, FLEXIBLE COUPLING, MECHANICAL DRIVE
	1300	ENGINE EXHAUST SYSTEM
	1500	TRUCK, HAND BRAKE
	1800	GENERAL LISTS—CARBODY AND MECHANICAL
	1900	SANDING SYSTEM
	2100	WINDSHIELD WIPER
	2128	SPEED RECORDER
	2150	SANITARY FACILITIES
	2300	STEAM SYSTEM
	2400	CAB
VOLUME THREE		TABLE OF CONTENTS—VOL. THREE
	2500	CARBODY
	2700	COUPLER, DRAFT GEAR
	2900	HORN, BELL
	3100	DYNAMIC BRAKE HATCH
	3200	ELECTRICAL CONTROL CABINET, CONTROL PANEL
	3300	MAIN GENERATOR MAIN GENERATOR-ALTERNATOR
	3500	HEADLIGHT DYNAMOTOR
	3600	AUXILIARY GENERATOR MOUNTING AND BLOWER
	3700	AUXILIARY GENERATOR
	3800	TRACTION MOTOR MOUNTING AND EQUIPMENT
	3900	TRACTION MOTOR
	4100	MOTOR DRIVEN—FUEL PUMP, HEATER, COOLING FAN
	4300	CONTROLLER
	4500	REGULATORS—LOAD, VOLTAGE
VOLUME FOUR		TABLE OF CONTENTS—VOL. FOUR
	4700	MAGNET VALVE
	4900	MANUAL SWITCH
	5100	PNEUMATIC CONTACTOR
	5300 5400	MAGNETIC CONTACTOR AND RELAY
	5500	PRESSURE AND TEMPERATURE CONTROL SWITCHES
	5700	JUMPER, PLUG, RECEPTACLE
	5900	HEADLIGHT
	6300	ALARM
	6900	GRID RESISTOR
	9100	GENERAL LISTS—ELECTRICAL
		NUMERICAL INDEX